1 HIGHLANDER

(Cont. next page)

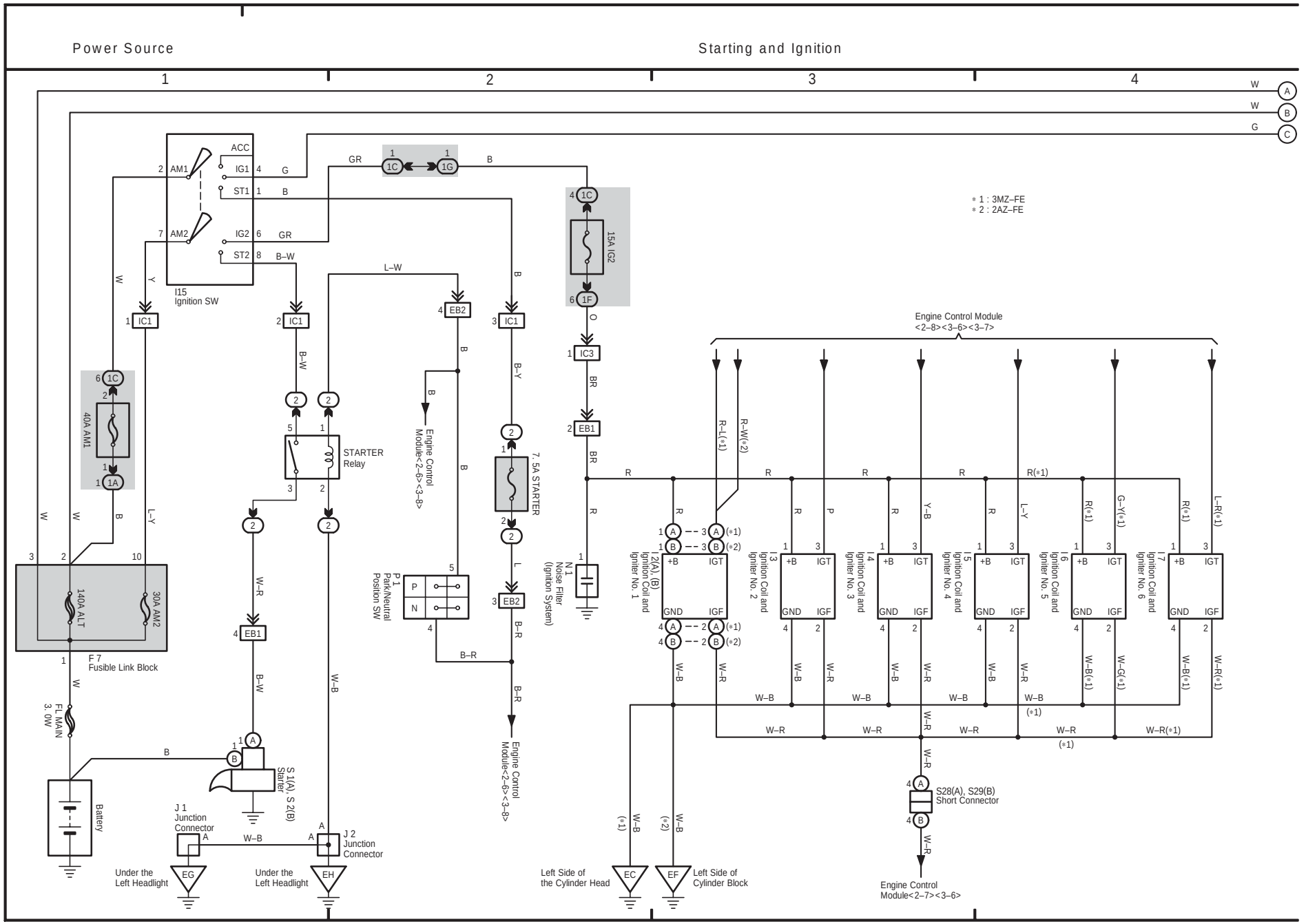

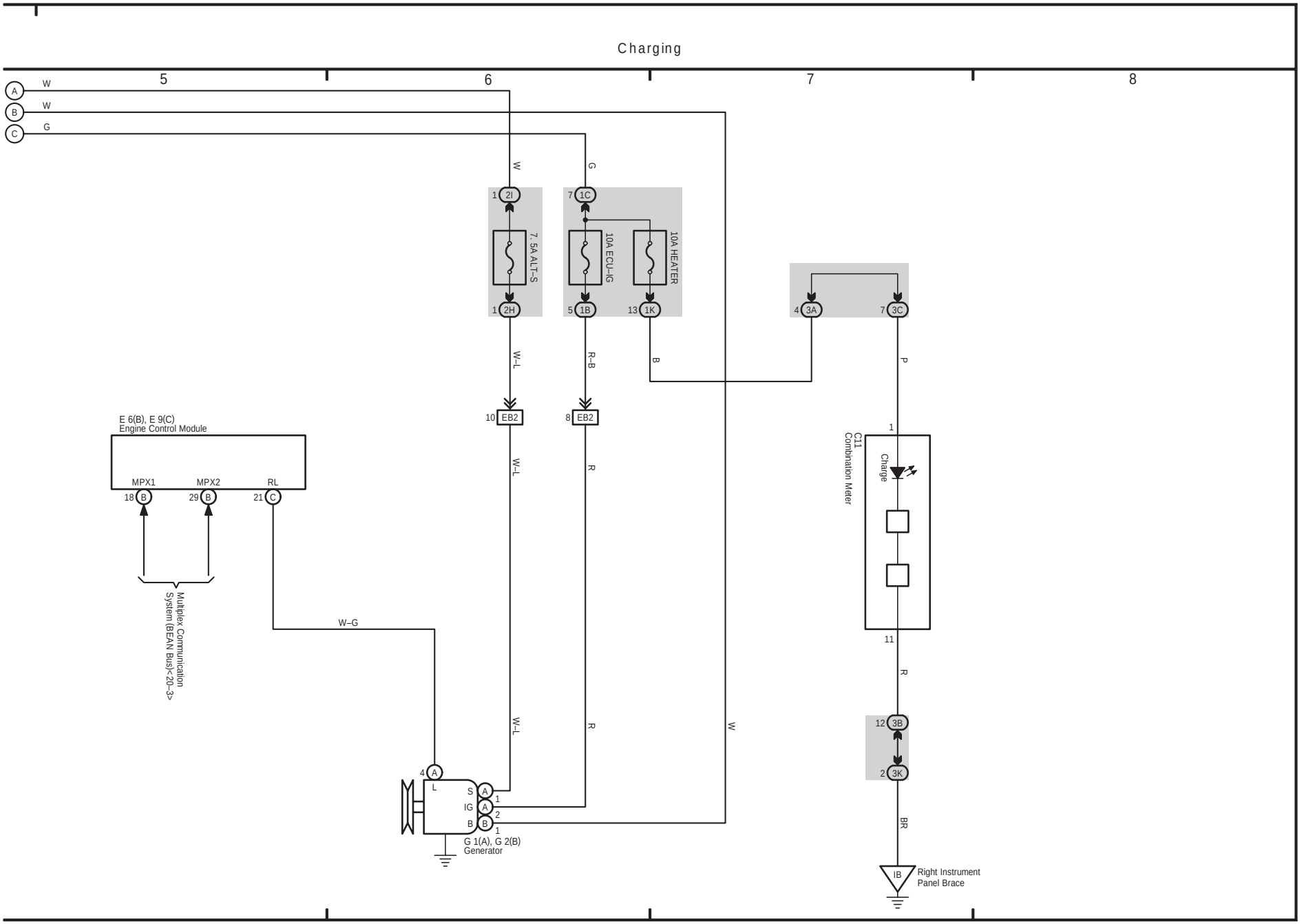
Charging
5
6
7
8
A
B
C
W
W
G
W
G
1 2I
7 1C
7.5A ALT–S
10A ECU–IG
10A HEATER
1 2H
5 1B
13 1K
4 3A
7 3C
W–L
R–B
B
P
10 EB2
8 EB2
E 6(B), E 9(C)
Engine Control Module
MPX1
MPX2
RL
18 B
29 B
21 C
Multiplex Communication System (BEAN Bus)<20–3>
W–G
W–L
R
W
1
C11
Combination Meter
Charge
11
R
12 3B
2 3K
BR
IB
Right Instrument Panel Brace
4 A
L
S
IG
B
A 1
A 2
B 1
G 1(A), G 2(B)
Generator

2 HIGHLANDER

(Cont. next page)

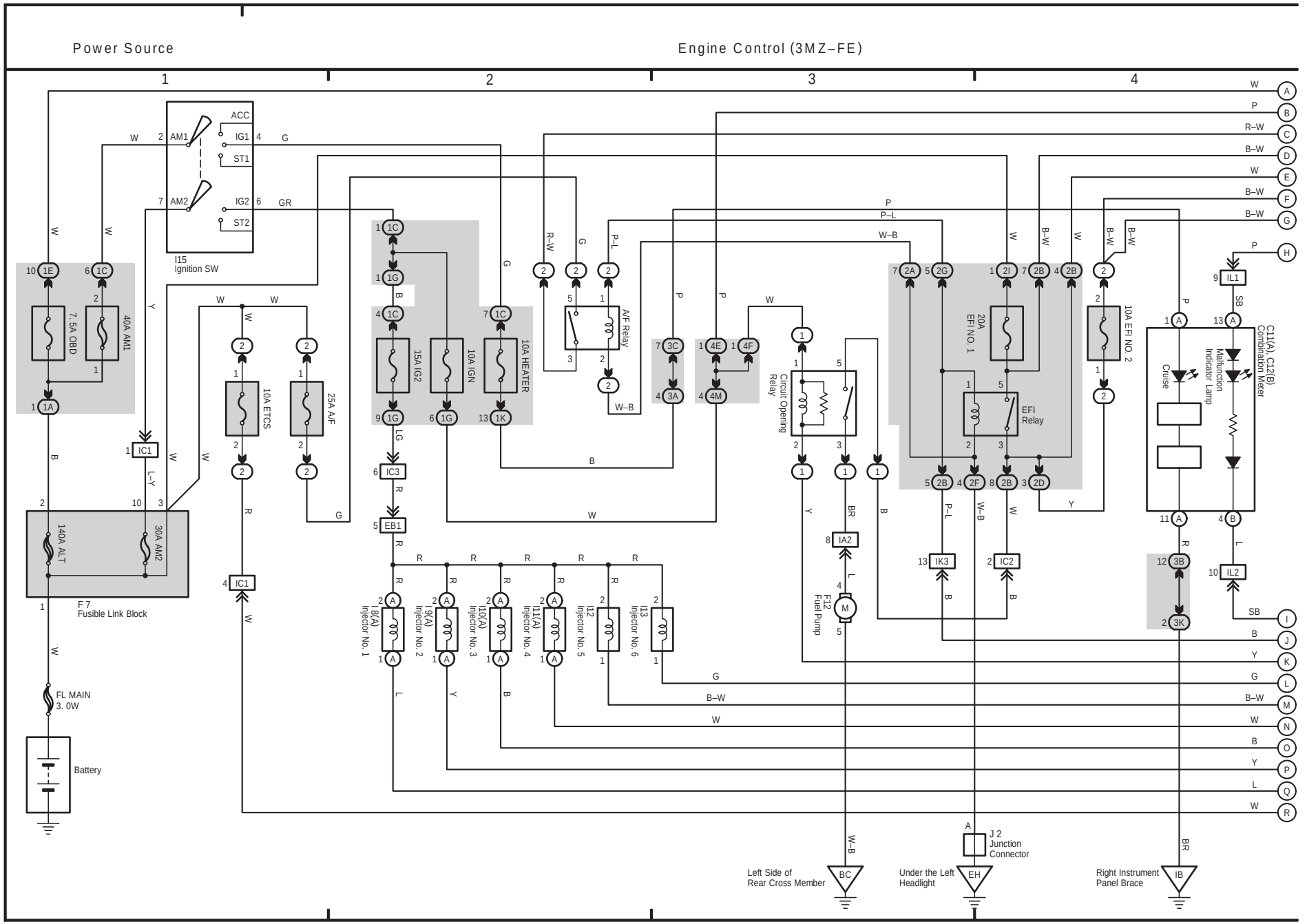

(Cont. next page)

Engine Control (3MZ–FE)

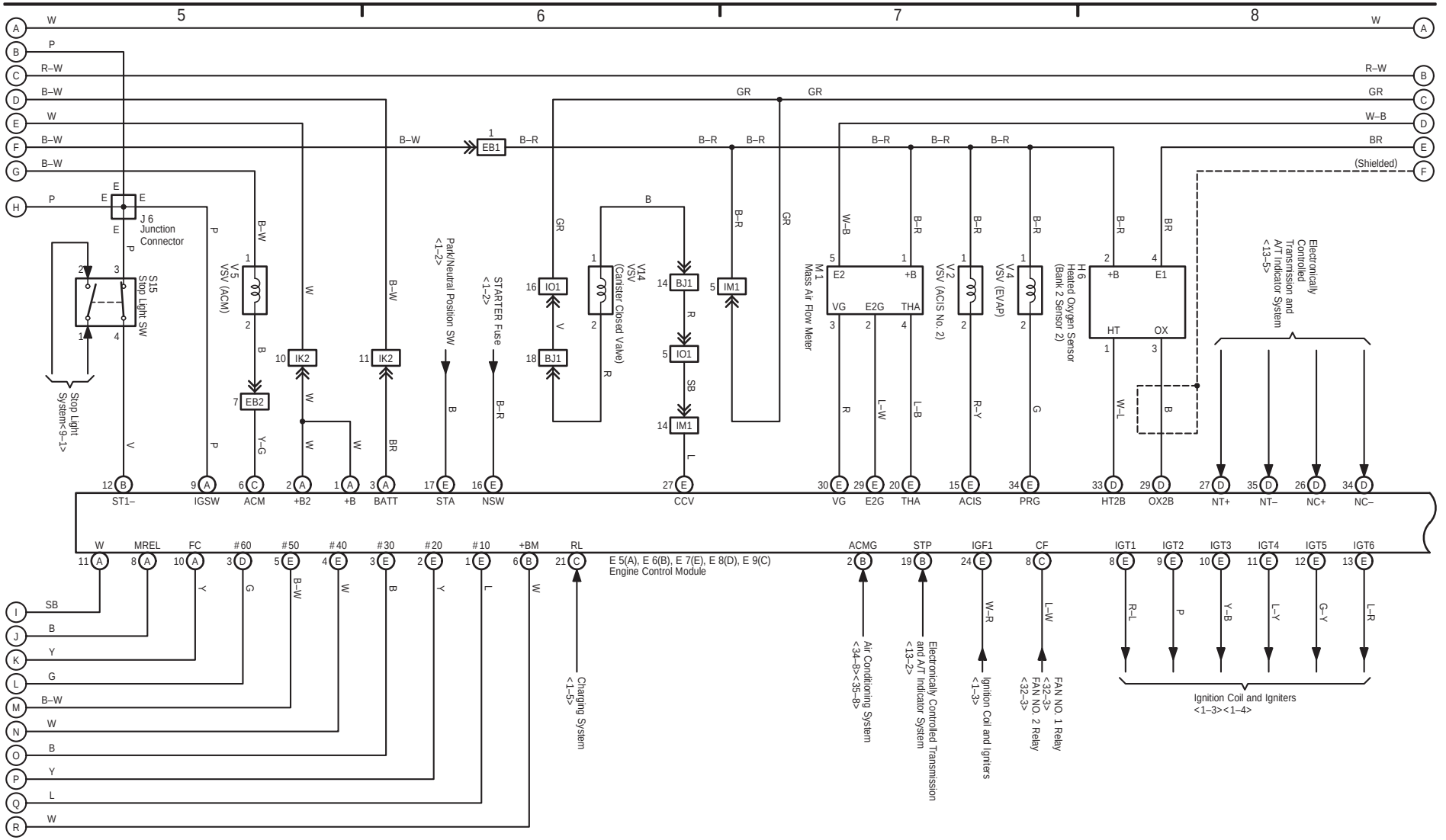

2 HIGHLANDER (Cont' d)

(Cont. next page)

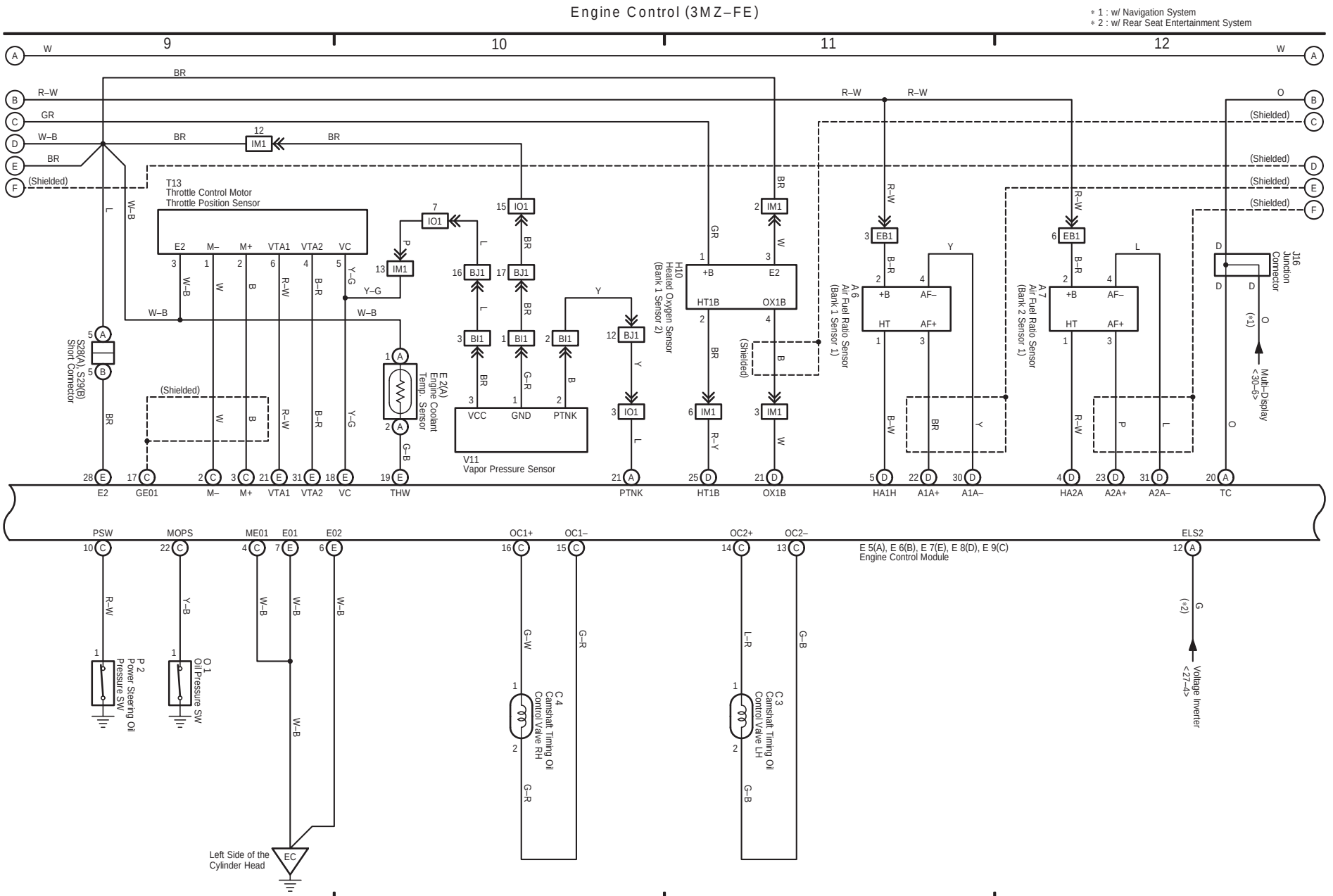

(Cont. next page)

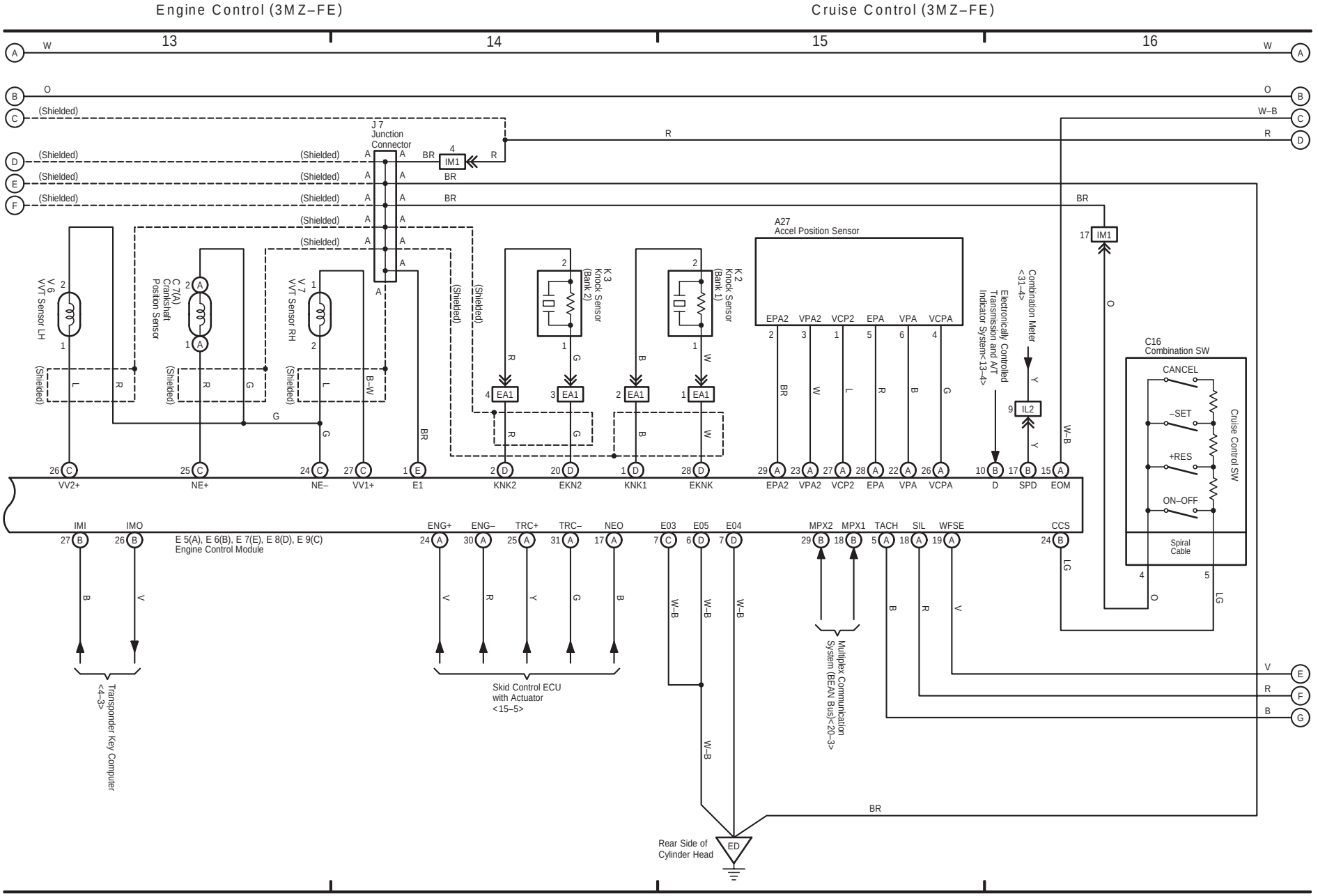

2 HIGHLANDER (Cont' d)

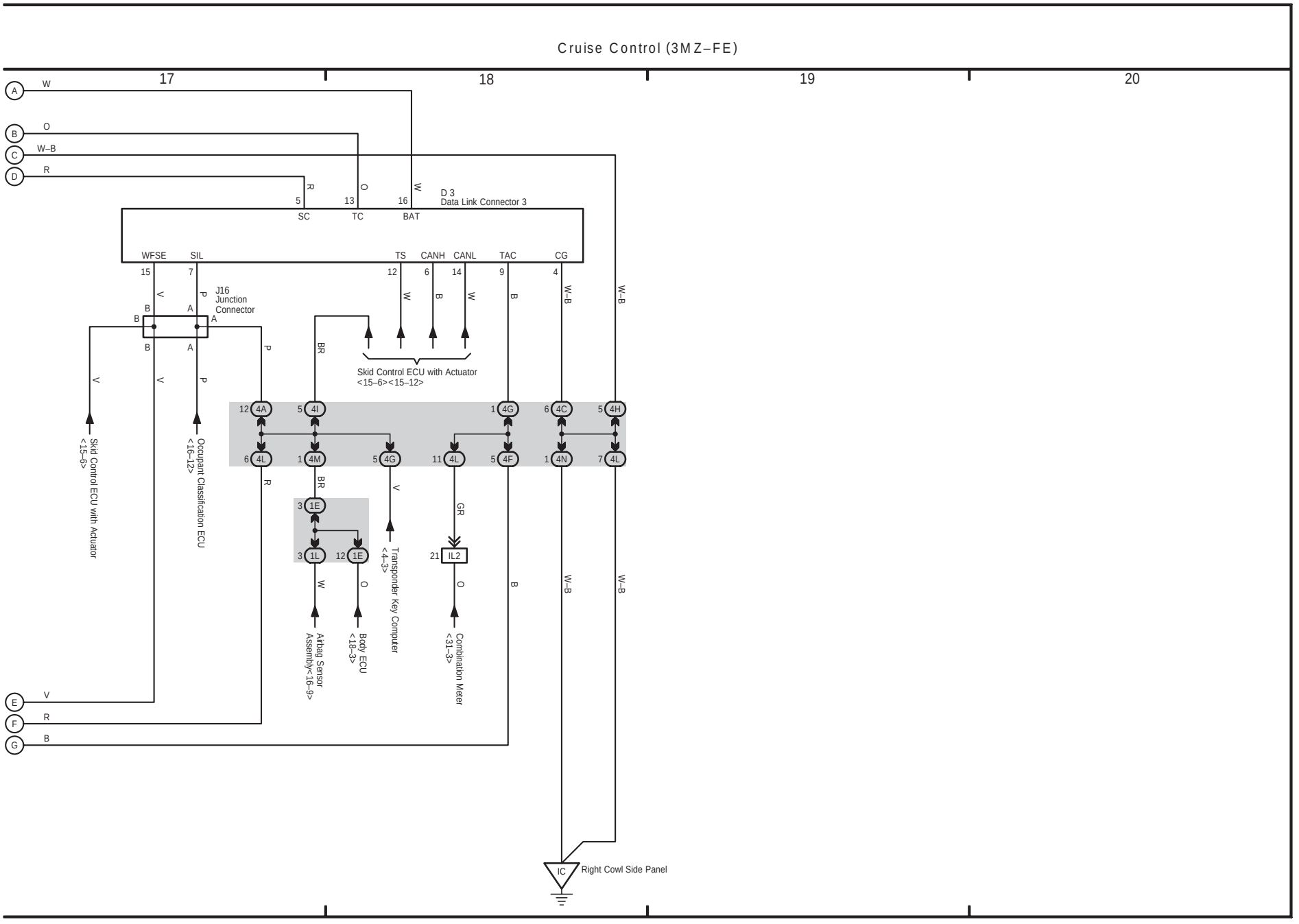

3 HIGHLANDER

(Cont. next page)

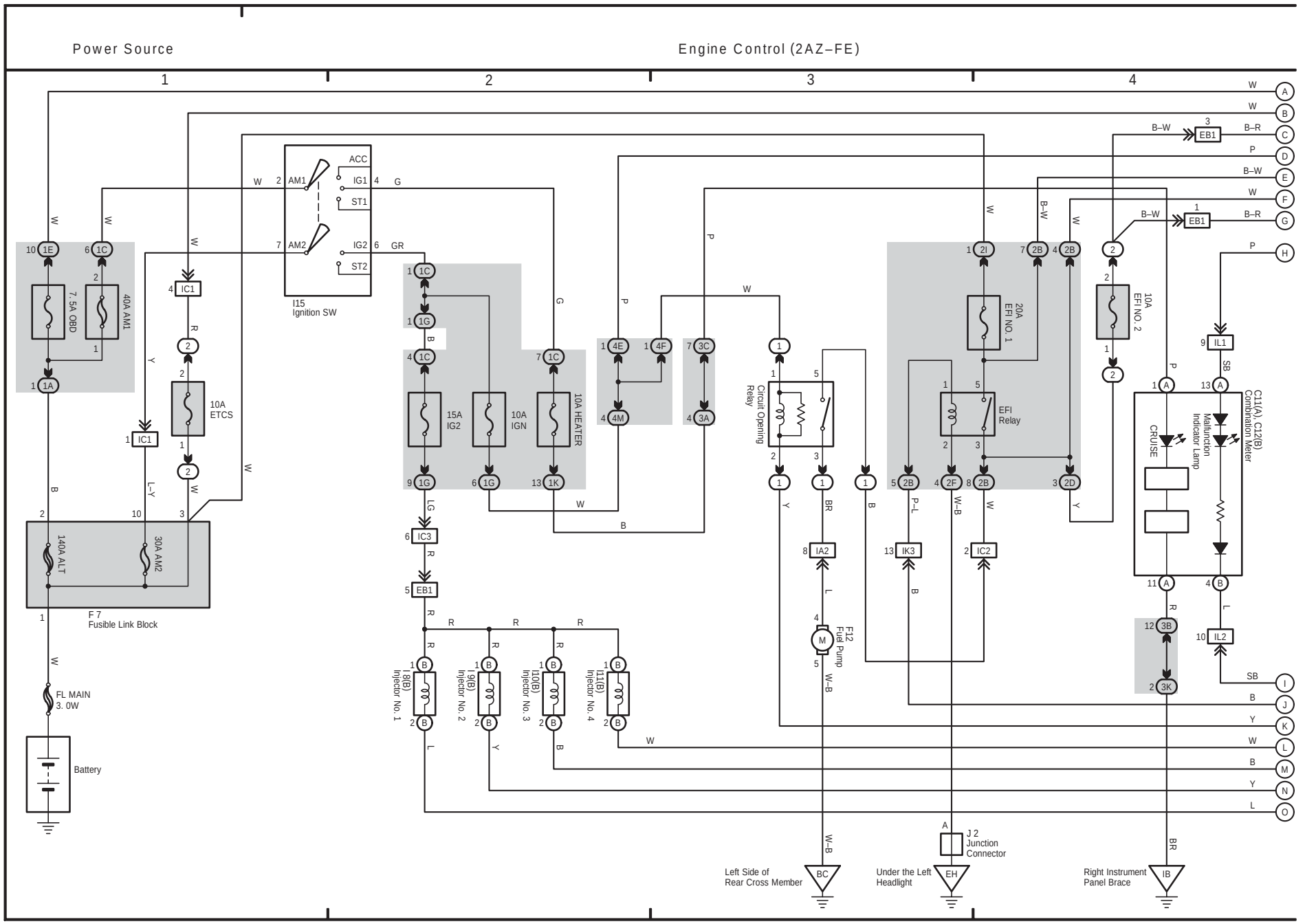

(Cont. next page)

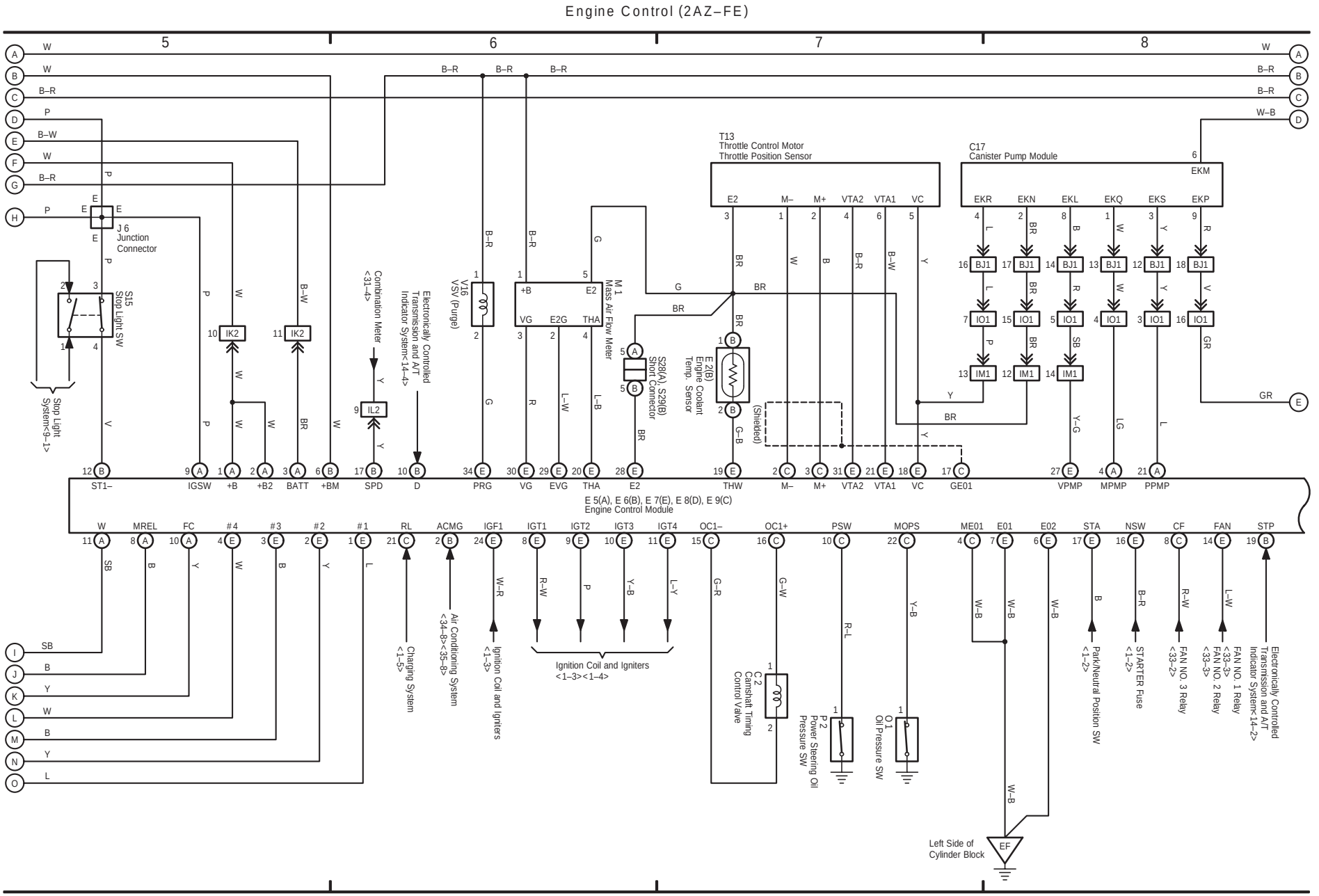

3 HIGHLANDER (Cont' d)

(Cont. next page)

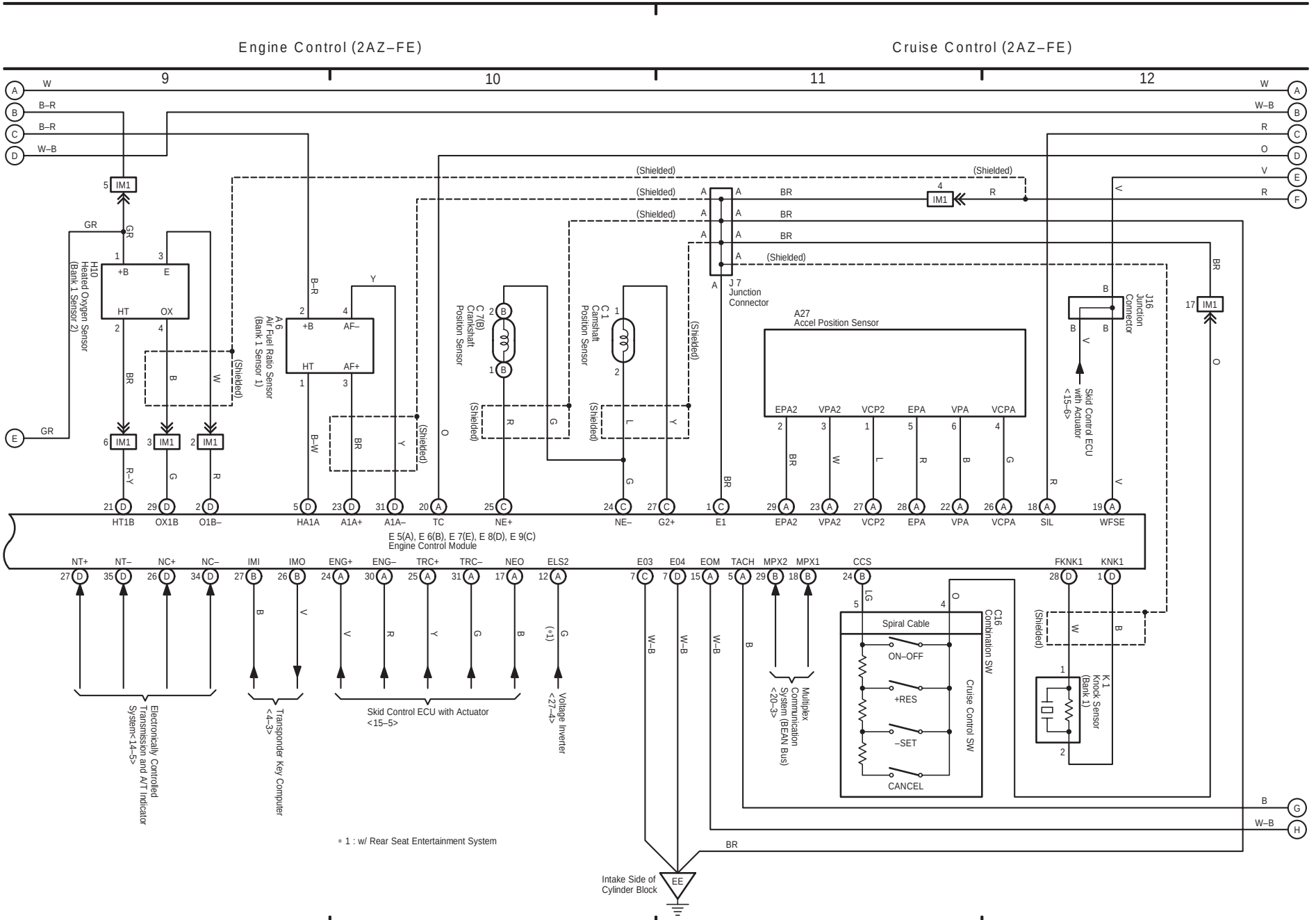

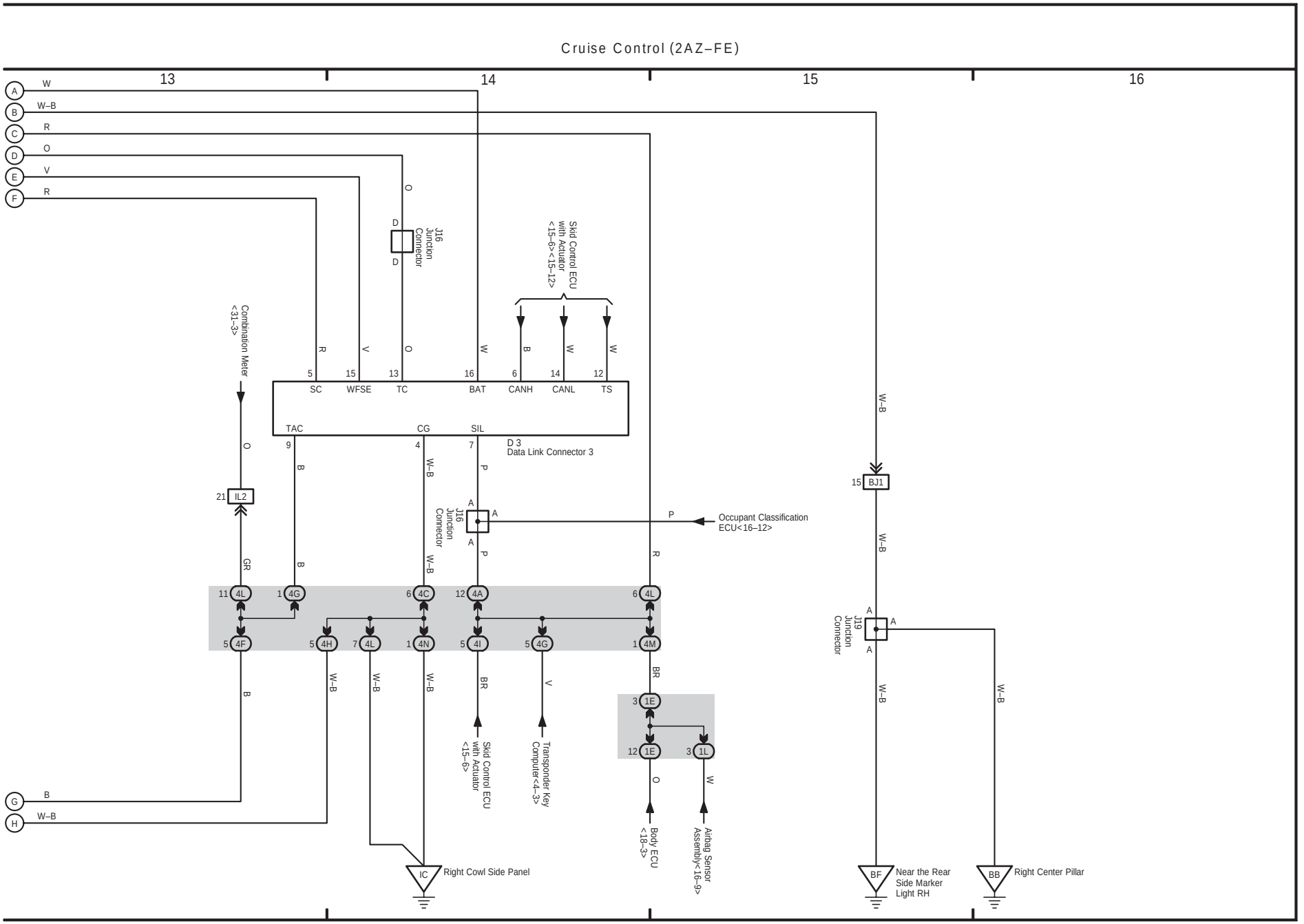
Cruise Control (2AZ–FE)
13
14
15
16
A W
B W–B
C R
D O
E V
F R
G B
H W–B
D
D
J16 Junction Connector
O
Skid Control ECU with Actuator <15–6><15–12>
Combination Meter <31–3>
5 SC
15 WFSE
13 TC
16 BAT
6 CANH
14 CANL
12 TS
TAC 9
CG 4
SIL 7
D 3 Data Link Connector 3
21 IL2
A A
A A
J16 Junction Connector
Occupant Classification ECU<16–12>
15 BJ1
A A
A
J19 Junction Connector
11 4L
1 4G
6 4C
12 4A
6 4L
5 4F
5 4H
7 4L
1 4N
5 4I
5 4G
1 4M
3 1E
12 1E
3 1L
Skid Control ECU with Actuator <15–6>
Transponder Key Computer<4–3>
Body ECU <18–3>
Airbag Sensor Assembly<16–9>
IC Right Cowl Side Panel
BF Near the Rear Side Marker Light RH
BB Right Center Pillar

4 HIGHLANDER

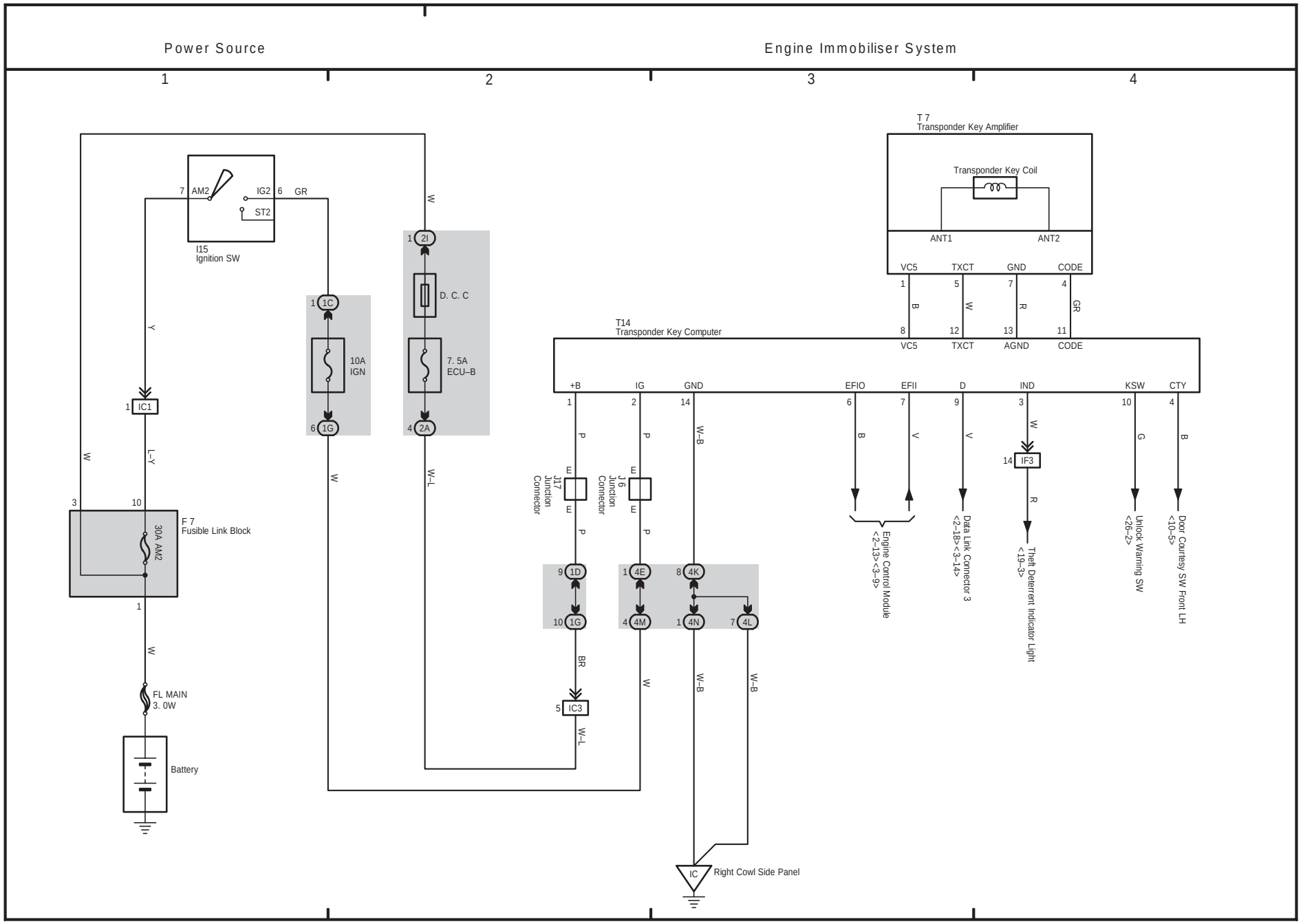

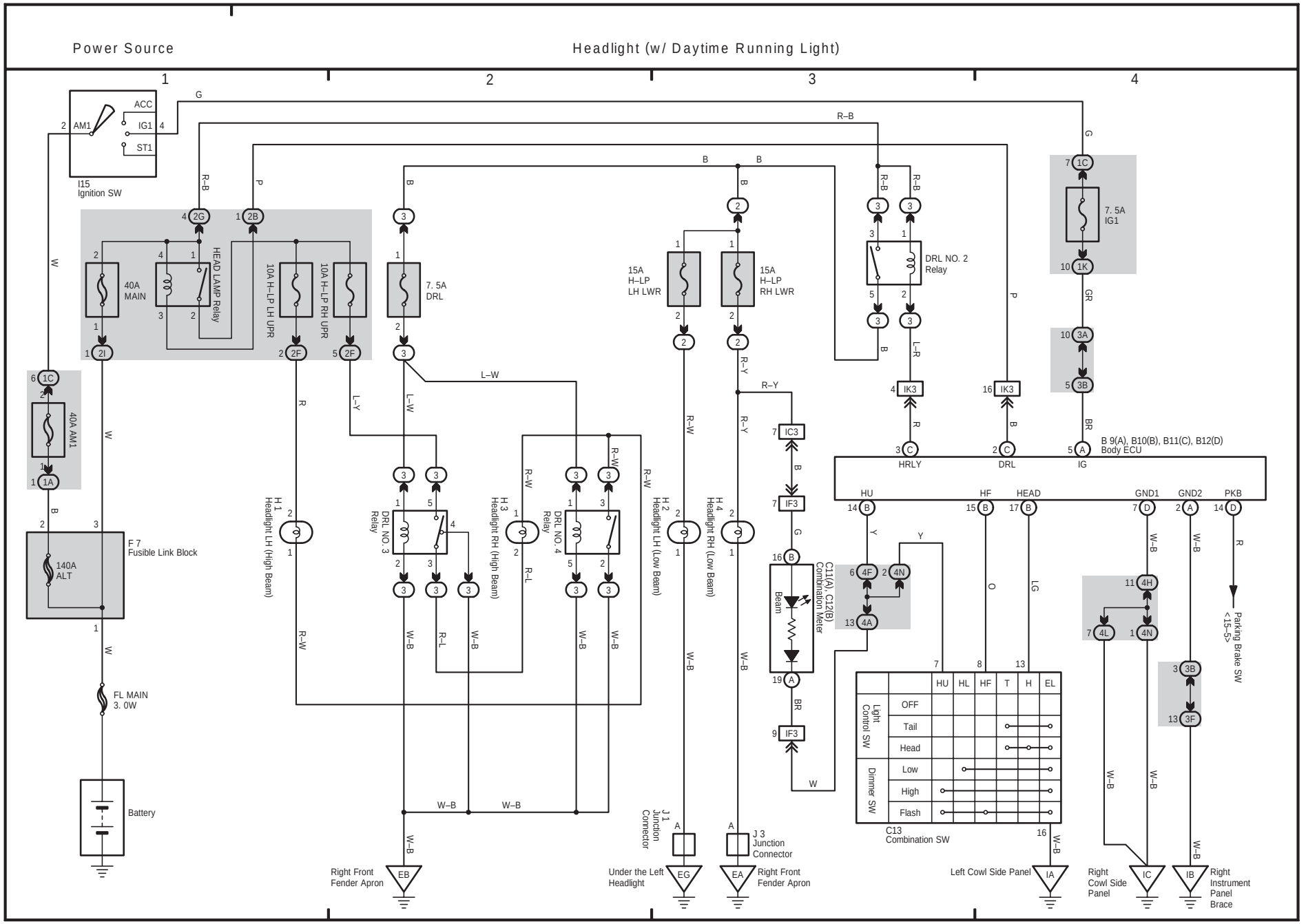
Power Source
Headlight (w/ Daytime Running Light)
1
2
3
4
I15
Ignition SW
ACC
IG1
ST1
AM1
40A
MAIN
HEAD LAMP Relay
10A H–LP LH UPR
10A H–LP RH UPR
7. 5A
DRL
15A
H–LP
LH LWR
15A
H–LP
RH LWR
DRL NO. 2
Relay
7. 5A
IG1
40A AM1
F 7
Fusible Link Block
140A
ALT
FL MAIN
3. 0W
Battery
H 1
Headlight LH (High Beam)
H 3
Headlight RH (High Beam)
H 2
Headlight LH (Low Beam)
H 4
Headlight RH (Low Beam)
DRL NO. 3
Relay
DRL NO. 4
Relay
C11(A), C12(B)
Combination Meter
Beam
C13
Combination SW
Light
Control SW
Dimmer SW
OFF
Tail
Head
Low
High
Flash
HU
HL
HF
T
H
EL
HRLY
DRL
IG
B 9(A), B10(B), B11(C), B12(D)
Body ECU
HU
HF
HEAD
GND1
GND2
PKB
Parking Brake SW
<15–5>
J 1
Junction
Connector
J 3
Junction
Connector
Right Front
Fender Apron
Under the Left
Headlight
Left Cowl Side Panel
Right
Cowl Side
Panel
Right
Instrument
Panel
Brace

6 HIGHLANDER

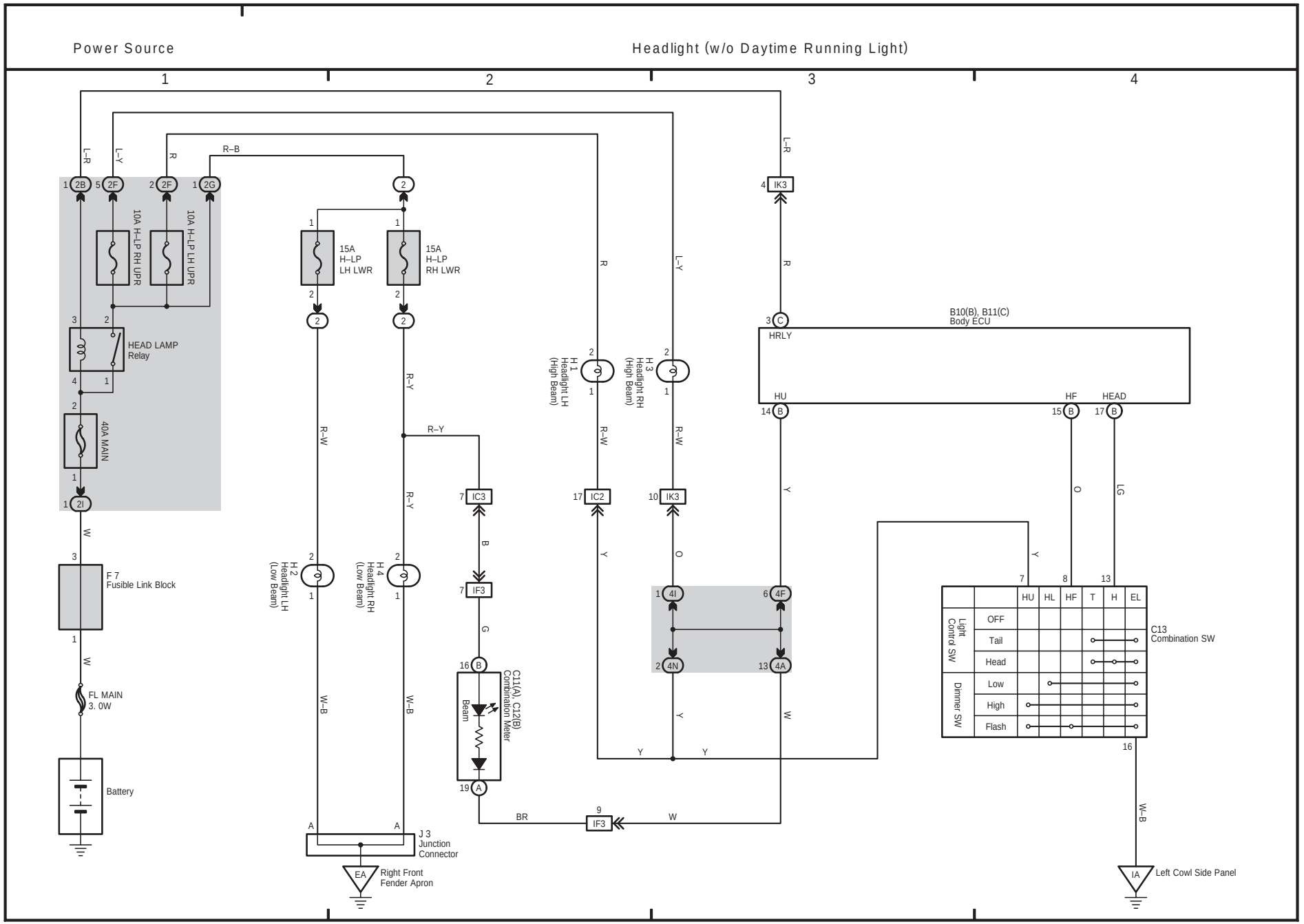

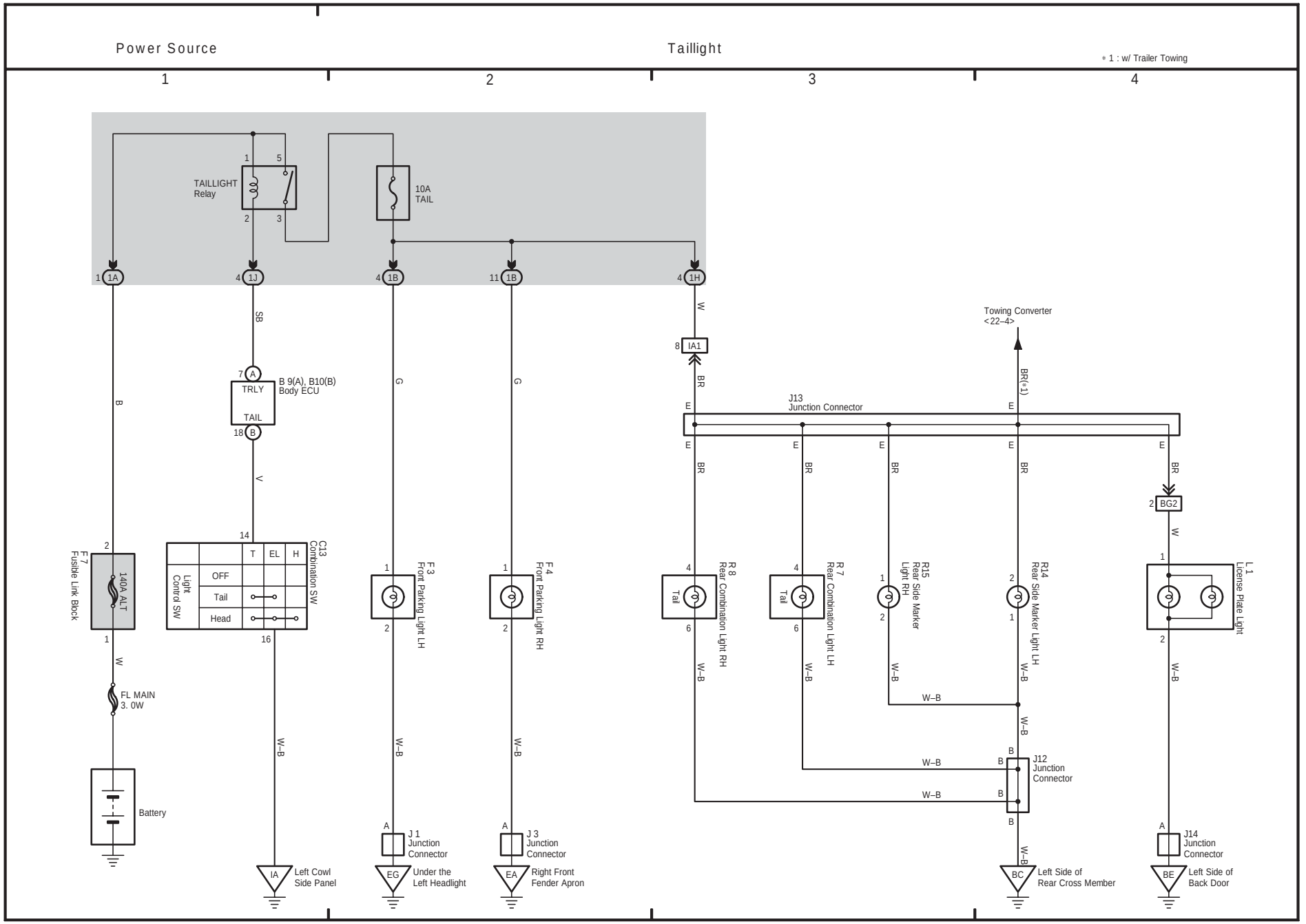
Power Source
Taillight
* 1 : w/ Trailer Towing
1
2
3
4
TAILLIGHT Relay
10A TAIL
1A
1J
1B
1B
1H
SB
B
G
G
W
7 A
TRLY
TAIL
18 B
B 9(A), B10(B) Body ECU
V
14
C13 Combination SW
T
EL
H
Light Contrl SW
OFF
Tail
Head
16
8 IA1
Towing Converter <22–4>
BR(*1)
J13 Junction Connector
E
BR
2 BG2
W
F7 Fusible Link Block
140A ALT
FL MAIN 3. 0W
Battery
W–B
F3 Front Parking Light LH
F4 Front Parking Light RH
R8 Rear Combination Light RH
R7 Rear Combination Light LH
RJ15 Rear Side Marker Light RH
RJ14 Rear Side Marker Light LH
L1 License Plate Light
Tail
J12 Junction Connector
J1 Junction Connector
J3 Junction Connector
J14 Junction Connector
IA
Left Cowl Side Panel
EG
Under the Left Headlight
EA
Right Front Fender Apron
BC
Left Side of Rear Cross Member
BE
Left Side of Back Door

8 HIGHLANDER

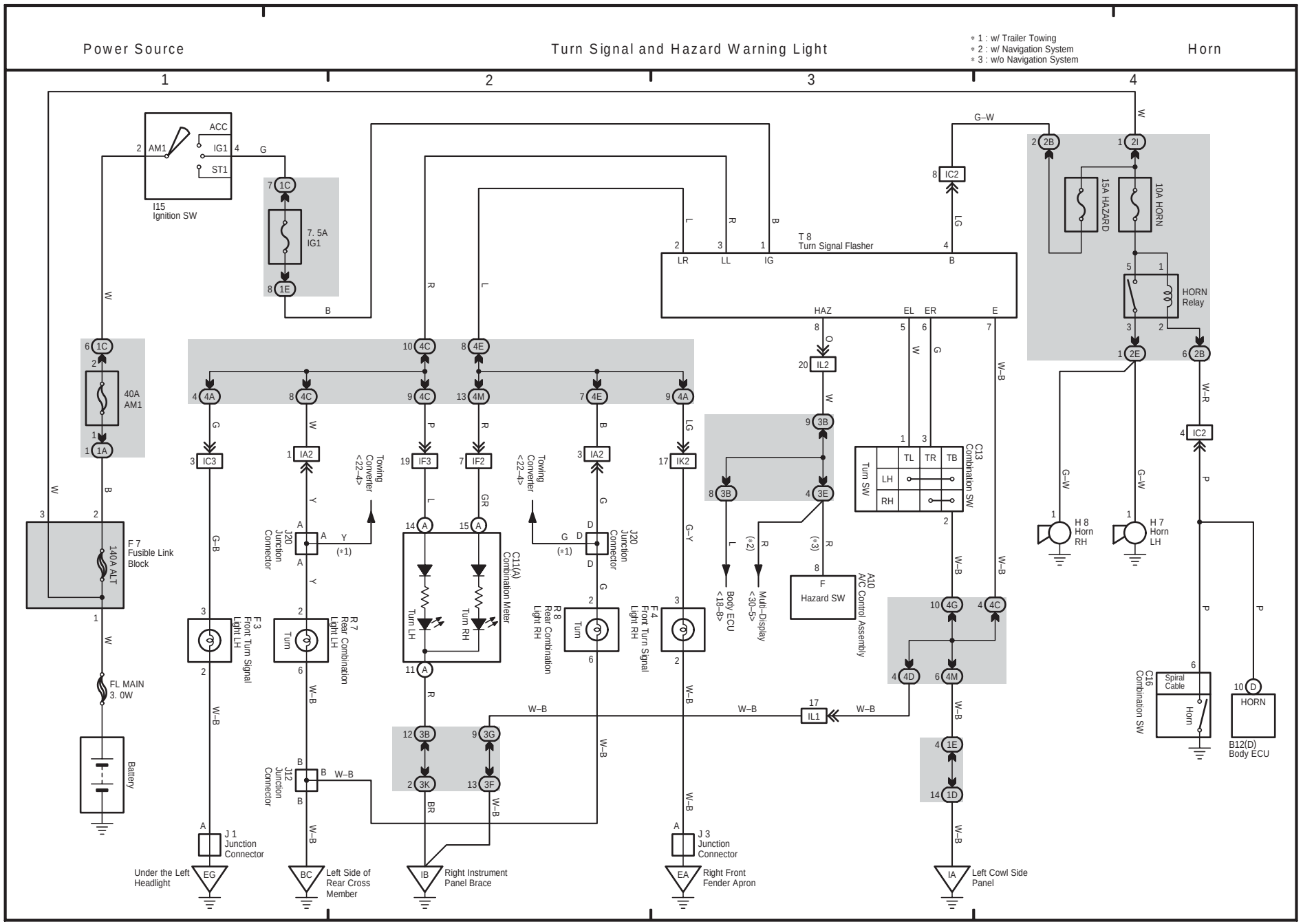

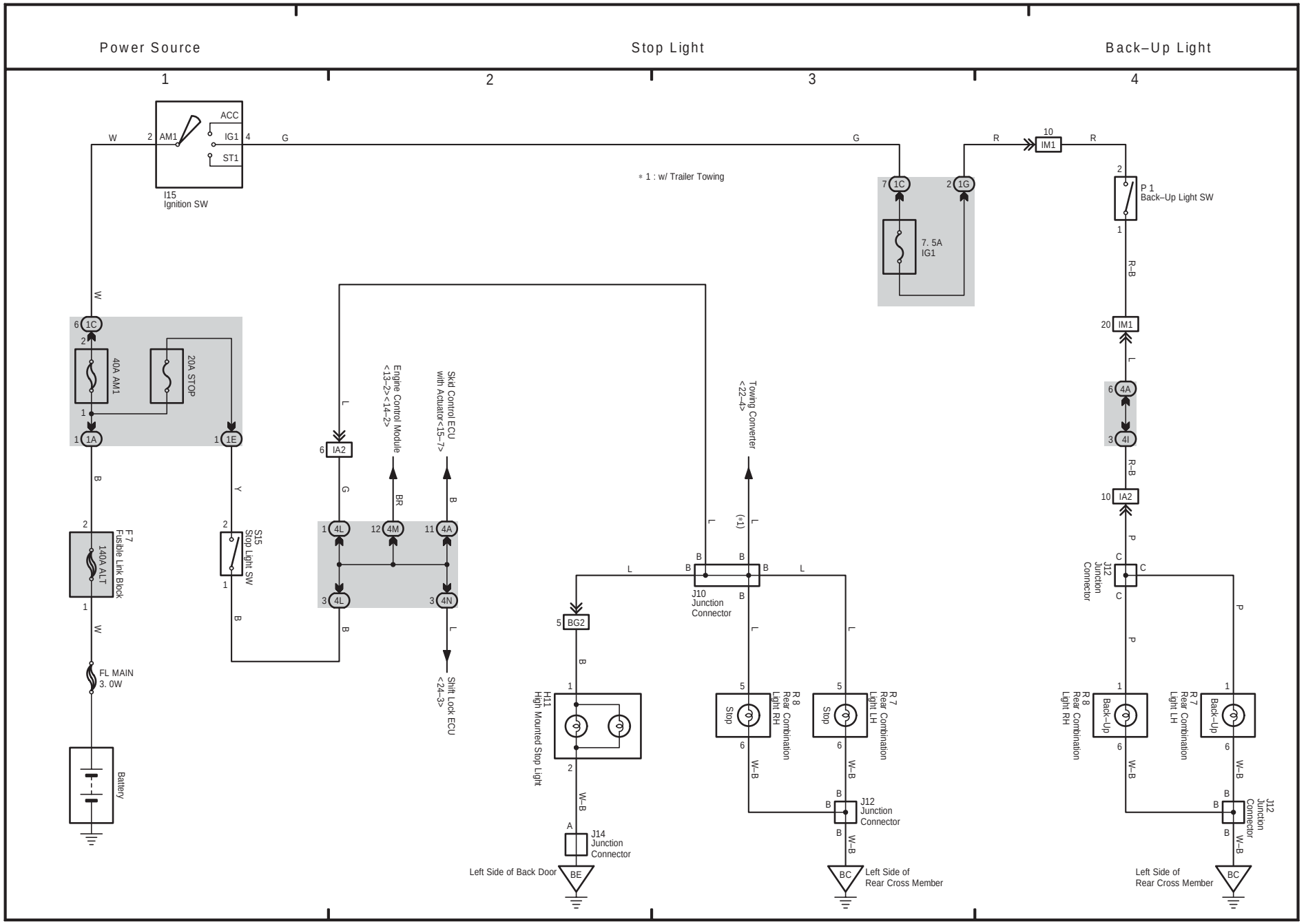
Power Source
Stop Light
Back–Up Light
1
2
3
4
ACC
IG1
ST1
AM1
I15
Ignition SW
* 1 : w/ Trailer Towing
7. 5A
IG1
P 1
Back–Up Light SW
40A AM1
20A STOP
F7
Fusible Link Block
140A ALT
FL MAIN
3. 0W
Battery
S15
Stop Light SW
Engine Control Module
<13–2><14–2>
Skid Control ECU
with Actuator<15–7>
Towing Converter
<22–4>
Shift Lock ECU
<24–3>
J10
Junction
Connector
J12
Junction
Connector
H11
High Mounted Stop Light
R 8
Rear Combination
Light RH
R 7
Rear Combination
Light LH
Stop
Back–Up
J14
Junction
Connector
Left Side of Back Door
Left Side of
Rear Cross Member

(Cont. next page)

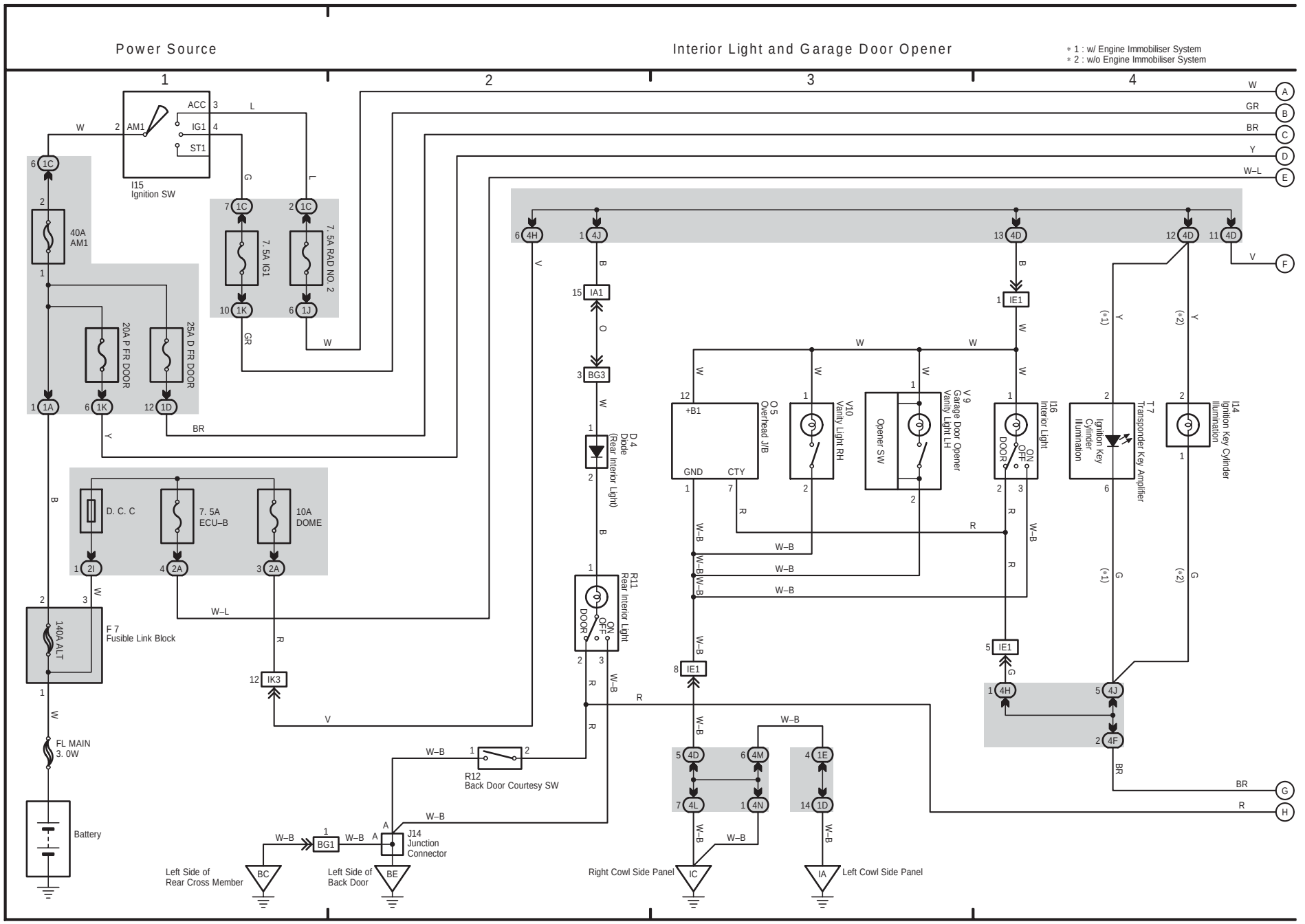

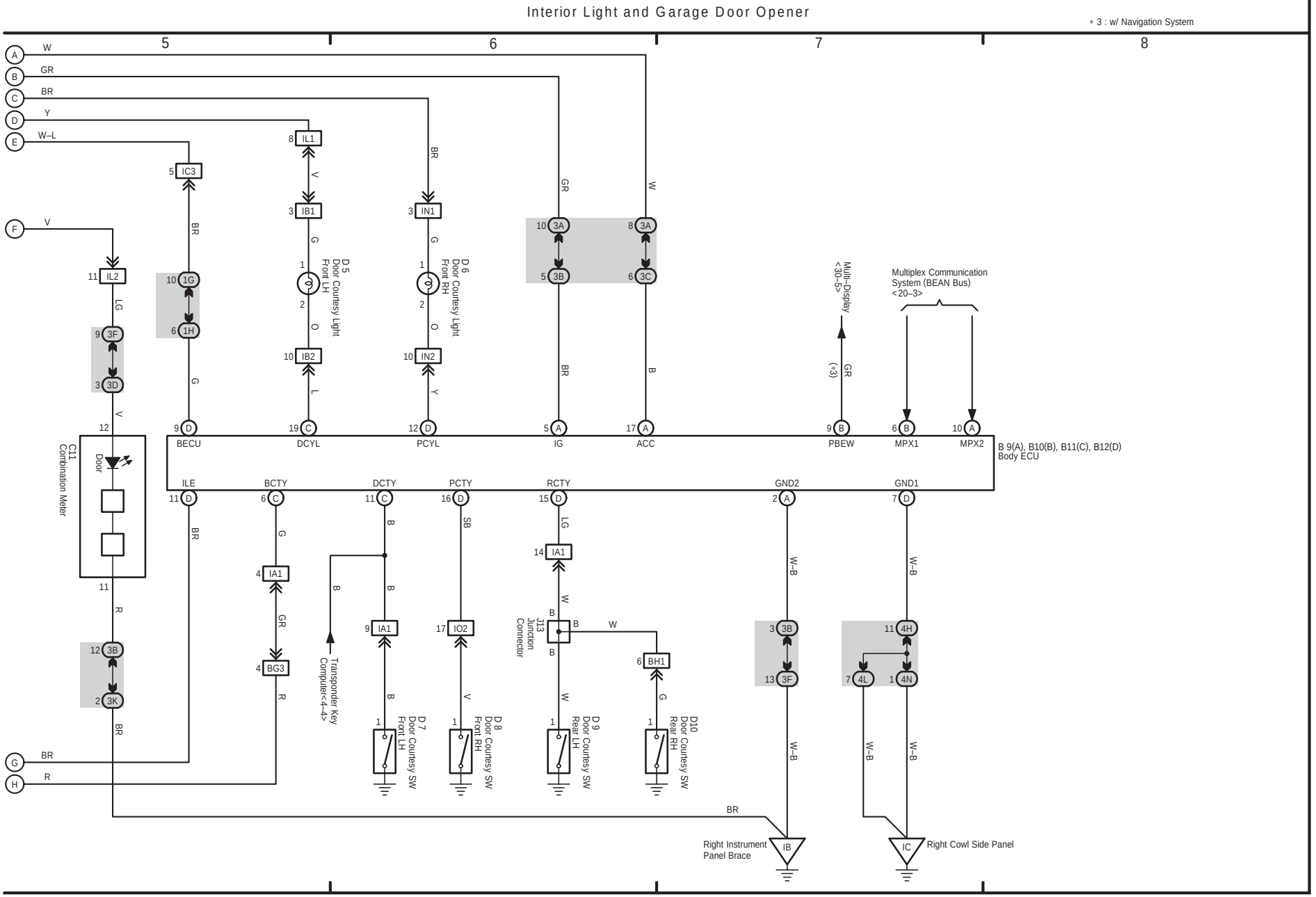
Interior Light and Garage Door Opener
* 3 : w/ Navigation System
5
6
7
8
W
GR
BR
Y
W–L
V
LG
G
L
O
Y
B
SB
W–B
IL1
IB1
IN1
IC3
IL2
1G
1H
3F
3D
3A
3B
3C
IB2
IN2
D 5 Door Courtesy Light Front LH
D 6 Door Courtesy Light Front RH
Multi–Display <30–5>
(*3)
Multiplex Communication System (BEAN Bus) <20–3>
C11 Combination Meter
Door
BECU
DCYL
PCYL
IG
ACC
PBEW
MPX1
MPX2
B 9(A), B10(B), B11(C), B12(D) Body ECU
ILE
BCTY
DCTY
PCTY
RCTY
GND2
GND1
IA1
BG3
IO2
BH1
3K
4H
4L
4N
J13 Junction Connector
Transponder Key Computer<4–4>
D 7 Door Courtesy SW Front LH
D 8 Door Courtesy SW Front RH
D 9 Door Courtesy SW Rear LH
D10 Door Courtesy SW Rear RH
Right Instrument Panel Brace
IB
IC
Right Cowl Side Panel

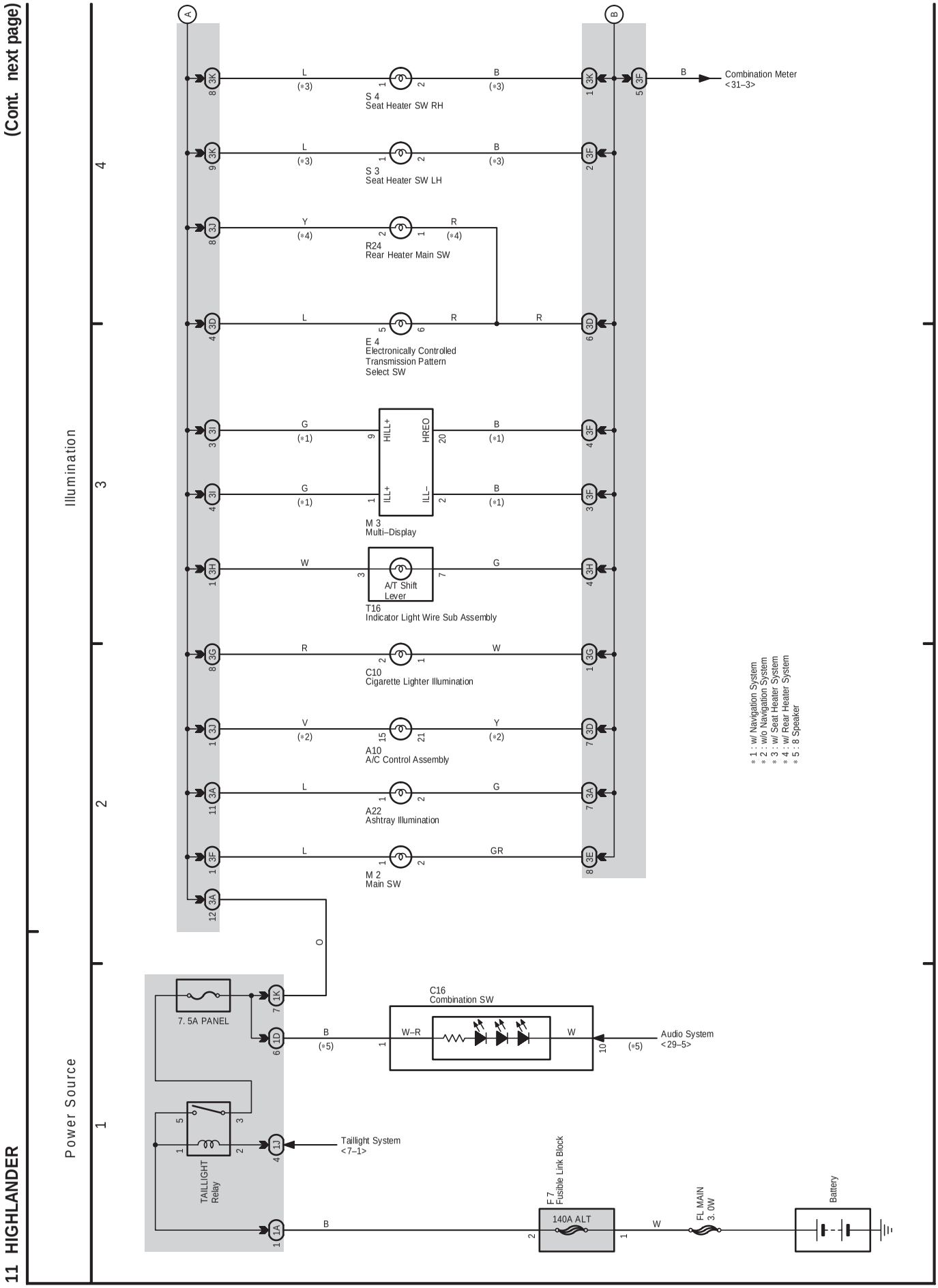
(Cont. next page)
11 HIGHLANDER
Power Source
Illumination
1
2
3
4
A
B
S 4
Seat Heater SW RH
S 3
Seat Heater SW LH
R24
Rear Heater Main SW
E 4
Electronically Controlled
Transmission Pattern
Select SW
M 3
Multi–Display
T16
Indicator Light Wire Sub Assembly
A/T Shift
Lever
C10
Cigarette Lighter Illumination
A10
A/C Control Assembly
A22
Ashtray Illumination
M 2
Main SW
Combination Meter
<31–3>
C16
Combination SW
Audio System
<29–5>
7. 5A PANEL
TAILLIGHT
Relay
Taillight System
<7–1>
F 7
Fusible Link Block
140A ALT
FL MAIN
3. 0W
Battery
* 1 : w/ Navigation System
* 2 : w/o Navigation System
* 3 : w/ Seat Heater System
* 4 : w/ Rear Heater System
* 5 : 8 Speaker

11 HIGHLANDER (Cont' d)

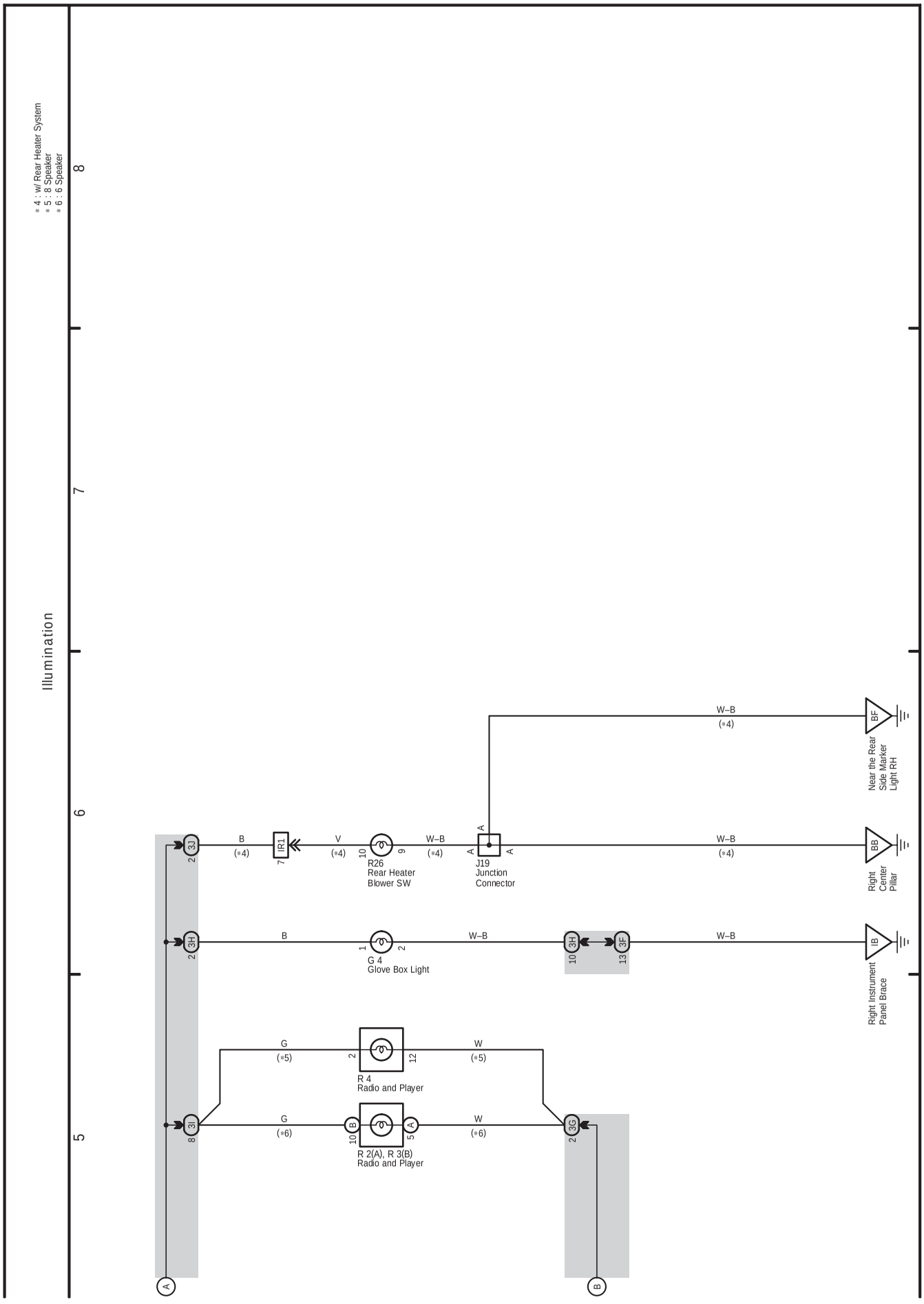

12 HIGHLANDER

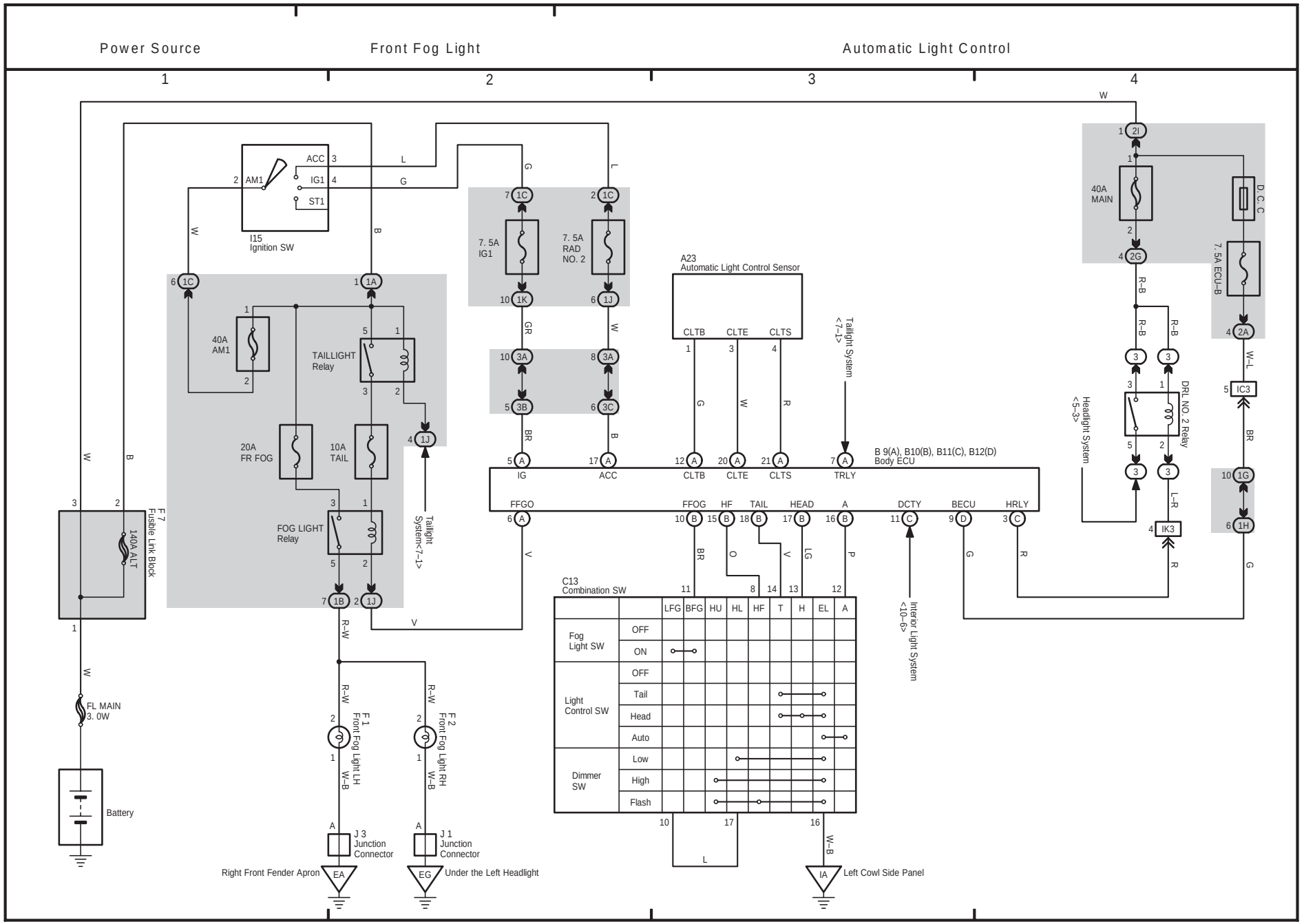

(Cont. next page)

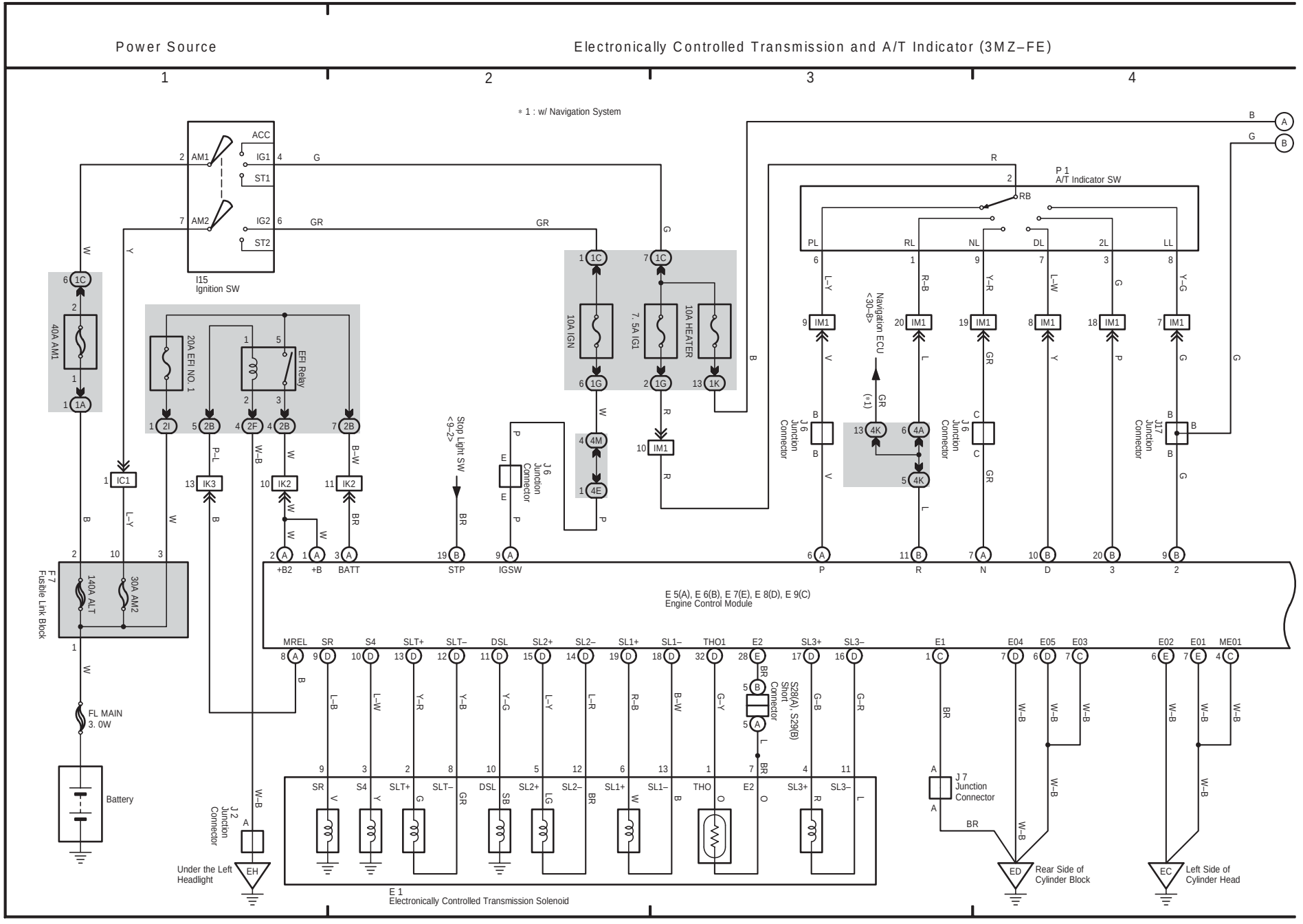

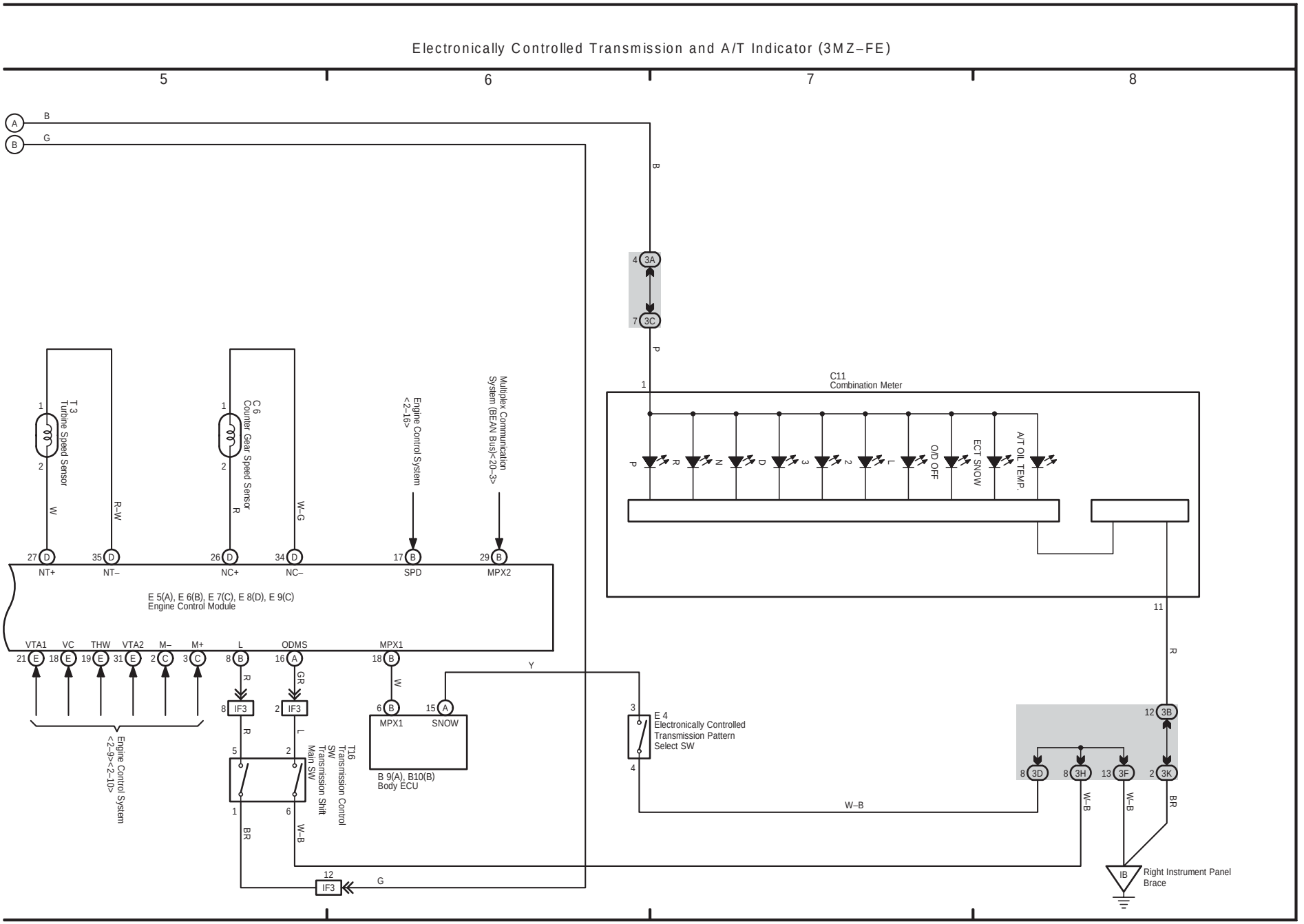
Electronically Controlled Transmission and A/T Indicator (3MZ–FE)
5
6
7
8
A
B
B
G
B
4 3A
7 3C
P
1
C11
Combination Meter
P
R
N
D
3
2
L
O/D OFF
ECT SNOW
A/T OIL TEMP.
11
R
T3
Turbine Speed Sensor
1
2
W
R–W
C6
Counter Gear Speed Sensor
1
2
R
W–G
Engine Control System
<2–16>
Multiplex Communication
System (BEAN Bus)<2D–3>
27 D
NT+
35 D
NT–
26 D
NC+
34 D
NC–
17 B
SPD
29 B
MPX2
E 5(A), E 6(B), E 7(C), E 8(D), E 9(C)
Engine Control Module
VTA1
21 E
VC
18 E
THW
19 E
VTA2
31 E
M–
2 C
M+
3 C
L
8 B
ODMS
16 A
MPX1
18 B
R
GR
W
8 IF3
2 IF3
6 B
15 A
MPX1
SNOW
B 9(A), B10(B)
Body ECU
Y
3
E 4
Electronically Controlled
Transmission Pattern
Select SW
4
12 3B
8 3D
8 3H
13 3F
2 3K
R
W–B
W–B
W–B
BR
Engine Control System
<2–9><2–10>
R
L
5
2
T16
Transmission Control
SW
Transmission Shift
Main SW
1
6
BR
W–B
12
IF3
G
IB
Right Instrument Panel
Brace

(Cont. next page)

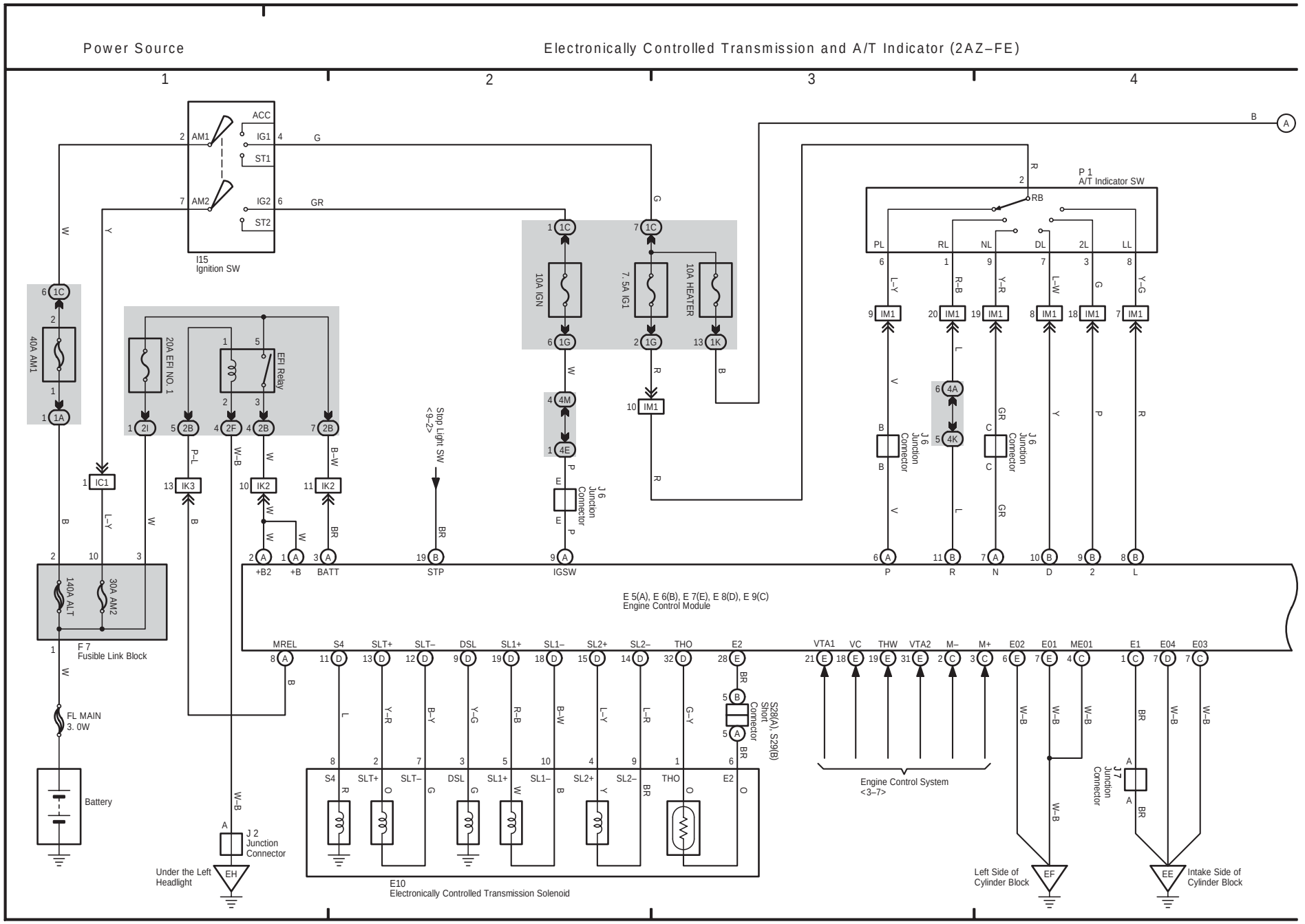

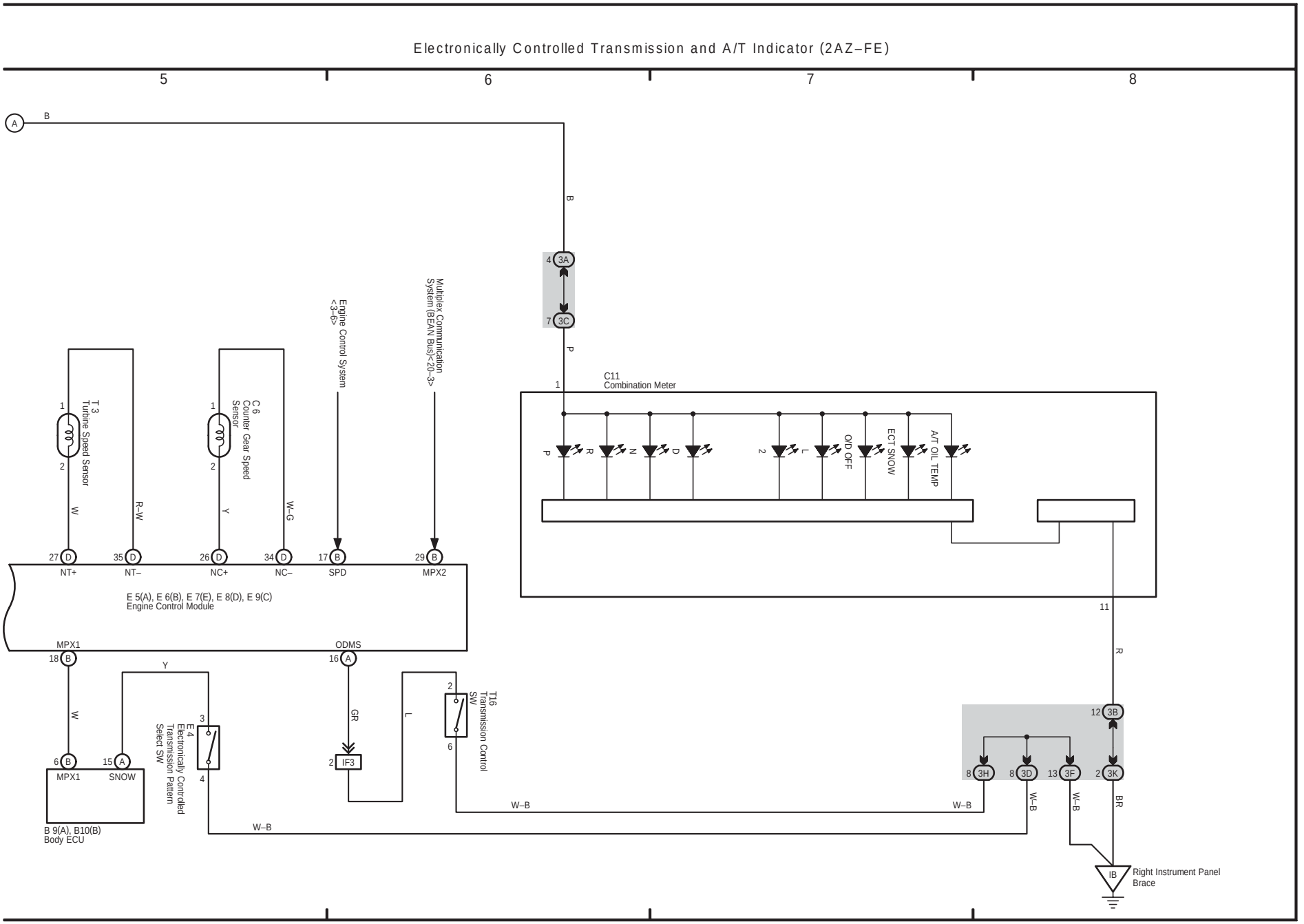
Electronically Controlled Transmission and A/T Indicator (2AZ–FE)
5
6
7
8
A
B
B
4 3A
7 3C
P
1
C11
Combination Meter
P
R
N
D
2
L
O/D OFF
ECT SNOW
A/T OIL TEMP
11
R
12 3B
8 3H
8 3D
13 3F
2 3K
W–B
W–B
W–B
BR
IB
Right Instrument Panel Brace
T 3
Turbine Speed Sensor
1
2
W
R–W
C 6
Counter Gear Speed Sensor
1
2
Y
W–G
Engine Control System <3–6>
Multiplex Communication System (BEAN Bus)<20–3>
27 D
NT+
35 D
NT–
26 D
NC+
34 D
NC–
17 B
SPD
29 B
MPX2
E 5(A), E 6(B), E 7(E), E 8(D), E 9(C)
Engine Control Module
MPX1
18 B
W
6 B
MPX1
15 A
SNOW
Y
E 4
Electronically Controlled Transmission Pattern Select SW
3
4
B 9(A), B10(B)
Body ECU
ODMS
16 A
GR
2 IF3
L
T16
Transmission Control SW
2
6
W–B

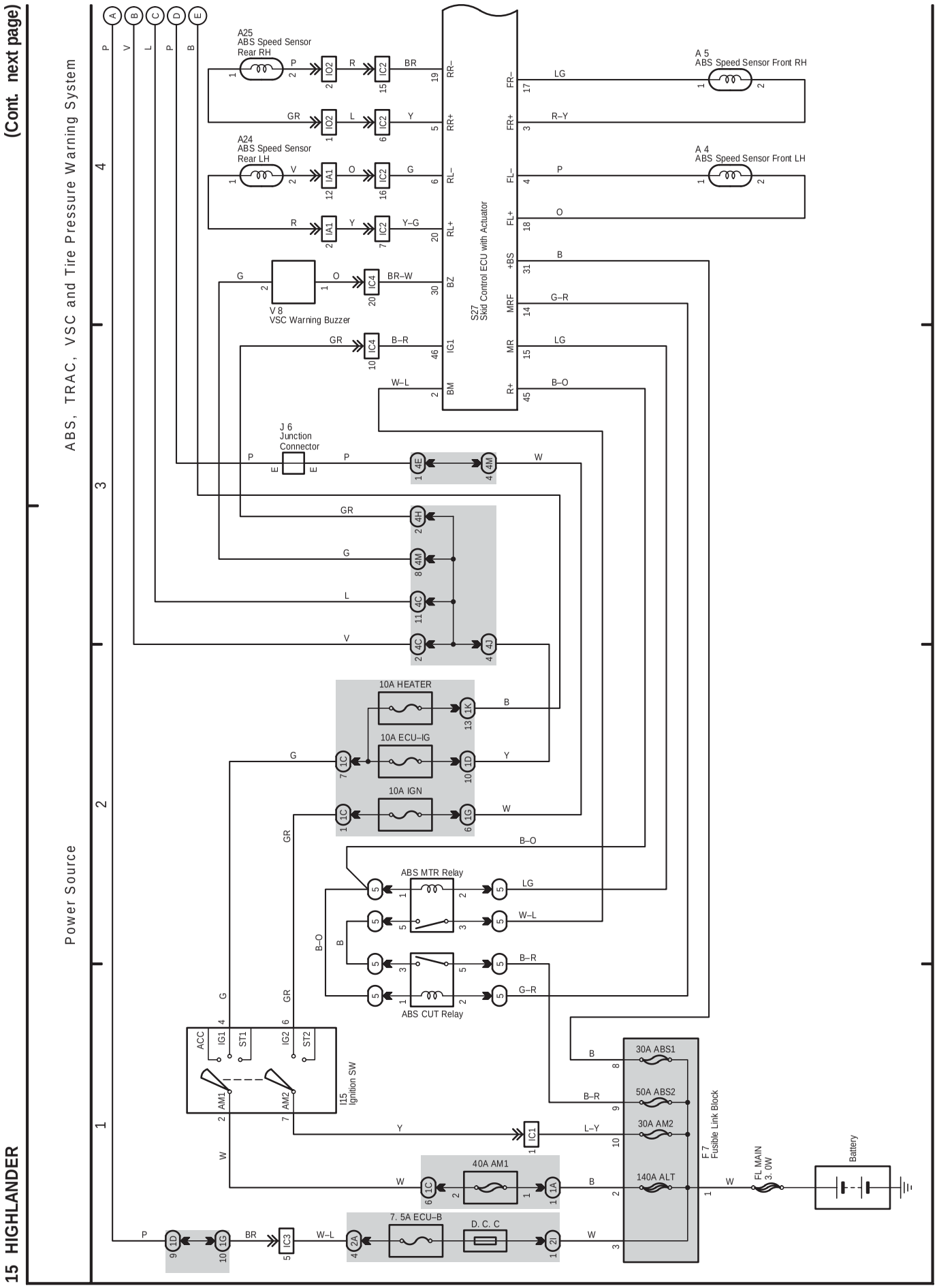
(Cont. next page)
15 HIGHLANDER
ABS, TRAC, VSC and Tire Pressure Warning System
Power Source
A25
ABS Speed Sensor
Rear RH
A24
ABS Speed Sensor
Rear LH
A 5
ABS Speed Sensor Front RH
A 4
ABS Speed Sensor Front LH
S27
Skid Control ECU with Actuator
V 8
VSC Warning Buzzer
J 6
Junction
Connector
10A HEATER
10A ECU–IG
10A IGN
ABS MTR Relay
ABS CUT Relay
I15
Ignition SW
30A ABS1
50A ABS2
30A AM2
140A ALT
40A AM1
7. 5A ECU–B
D. C. C
F 7
Fusible Link Block
FL MAIN
3. 0W
Battery

(Cont. next page)

ABS, TRAC, VSC and Tire Pressure Warning System

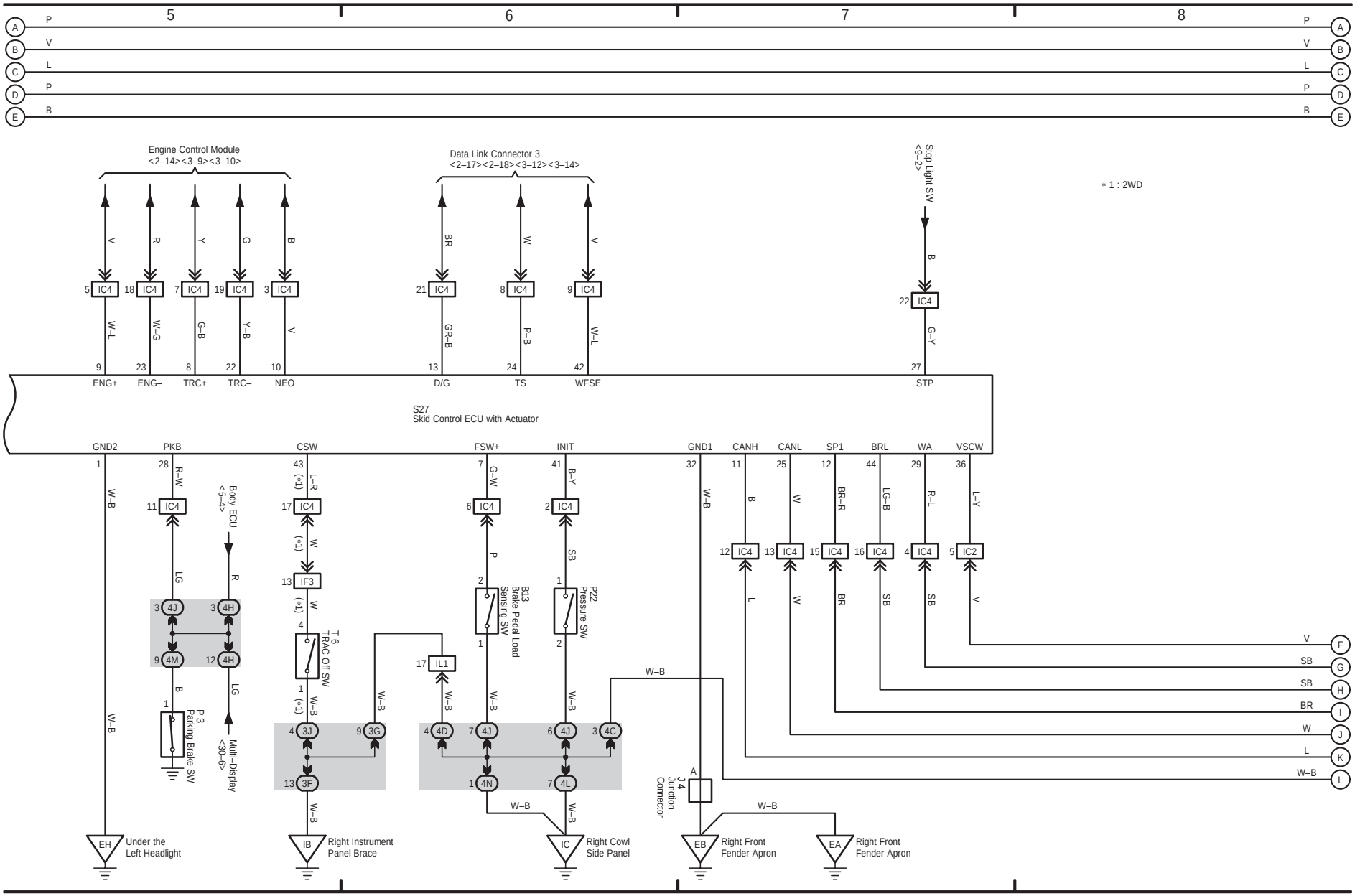

15 HIGHLANDER (Cont' d)

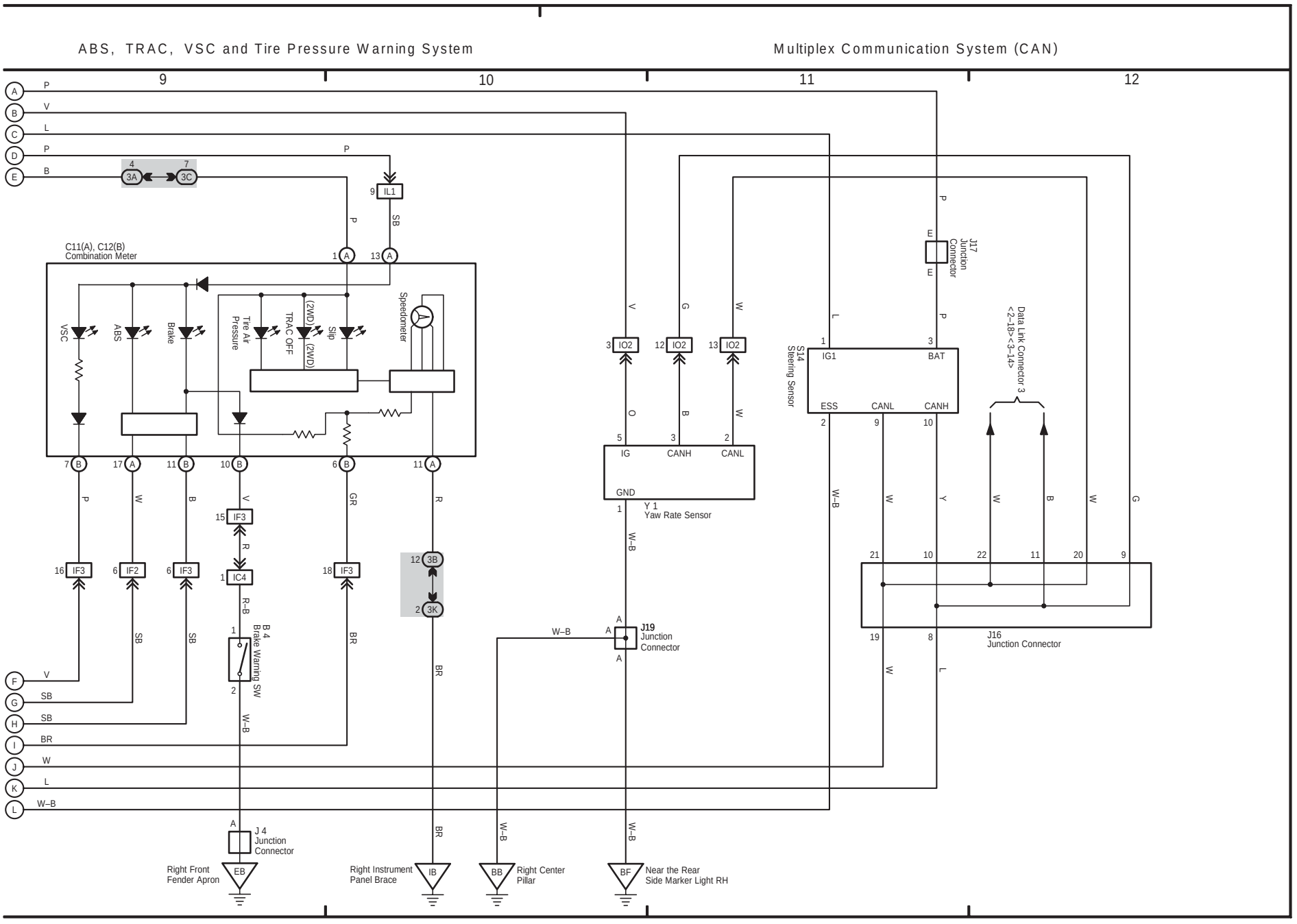

16 HIGHLANDER

(Cont. next page)

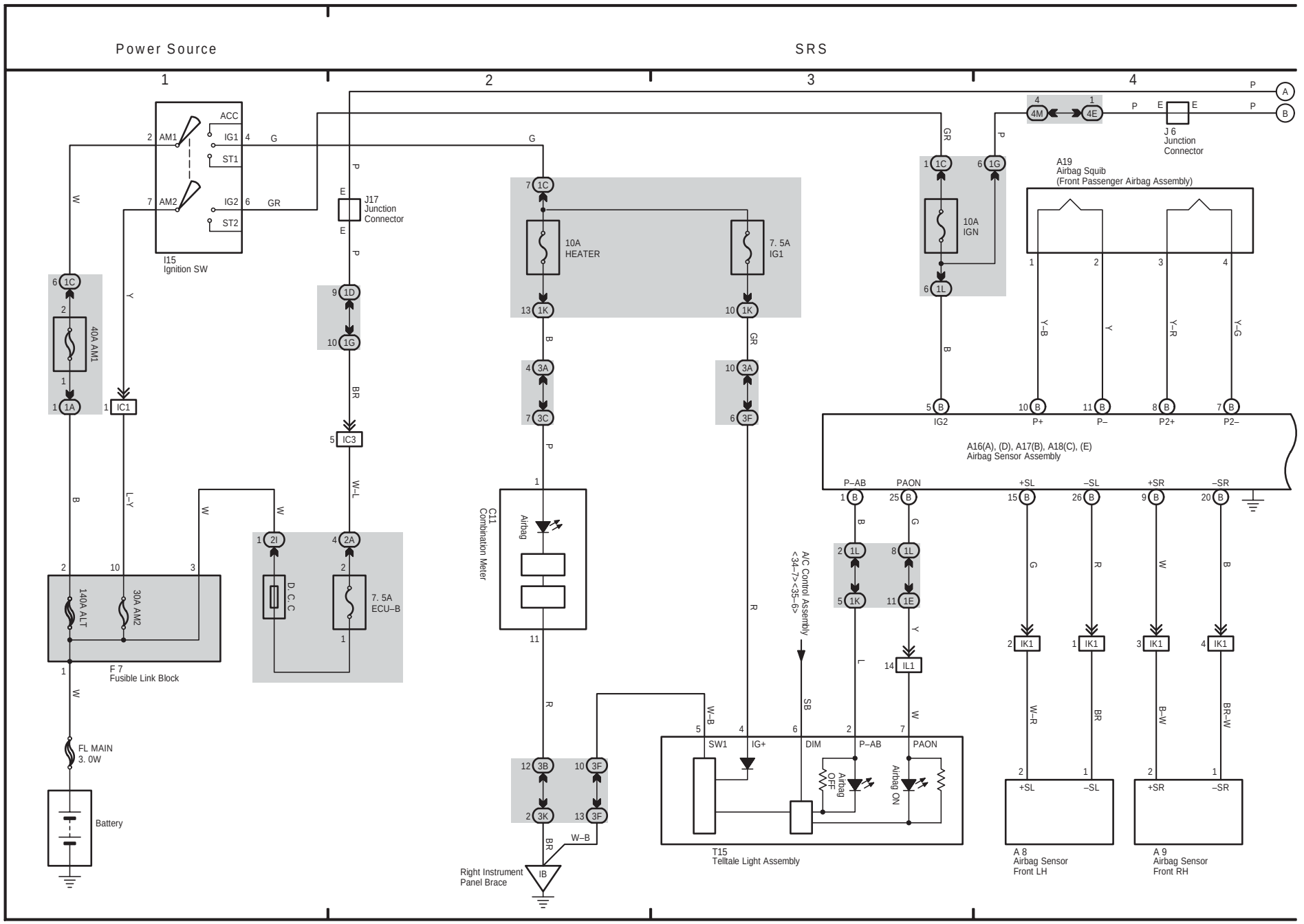

(Cont. next page)

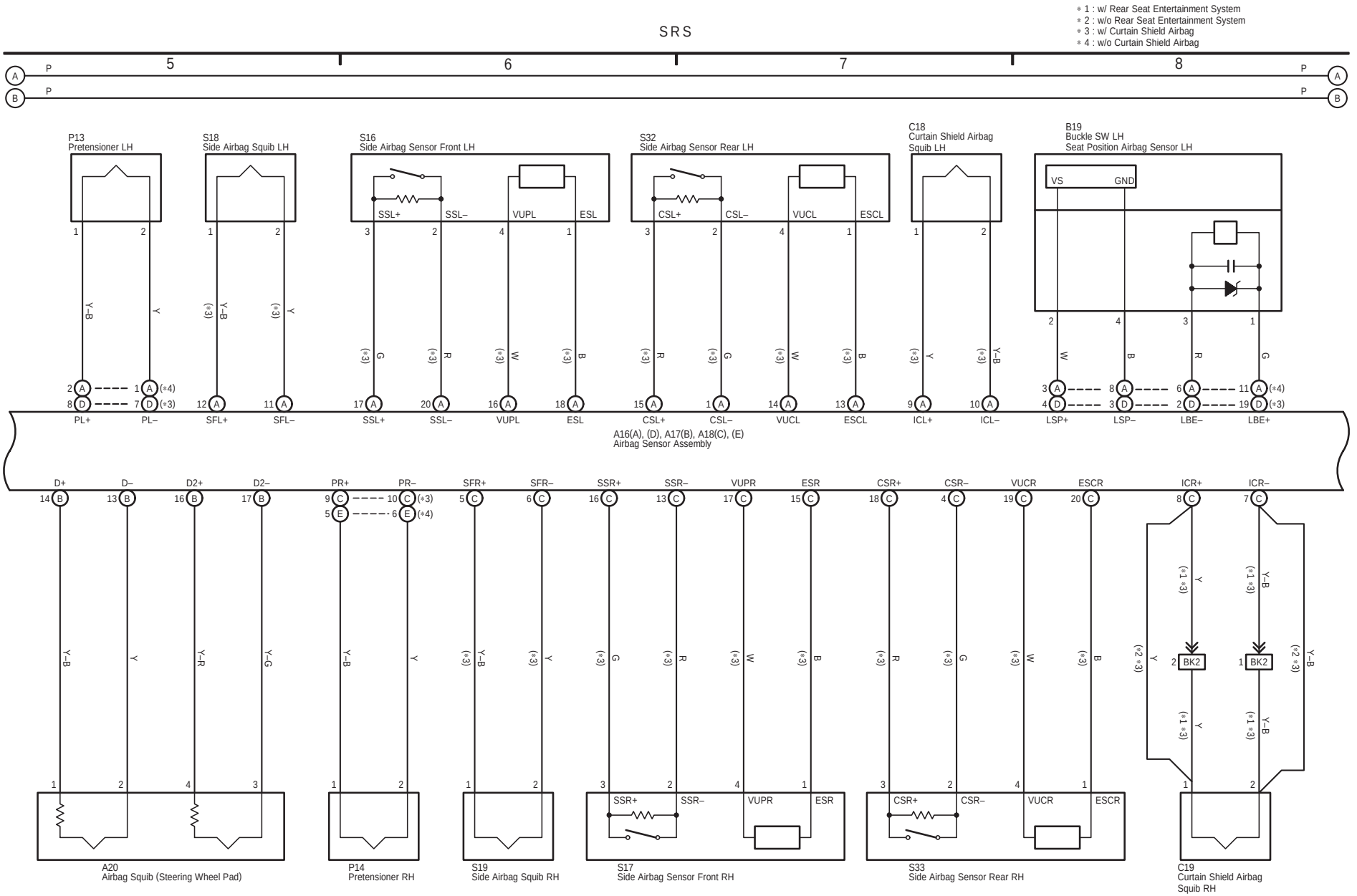

16 HIGHLANDER (Cont' d)

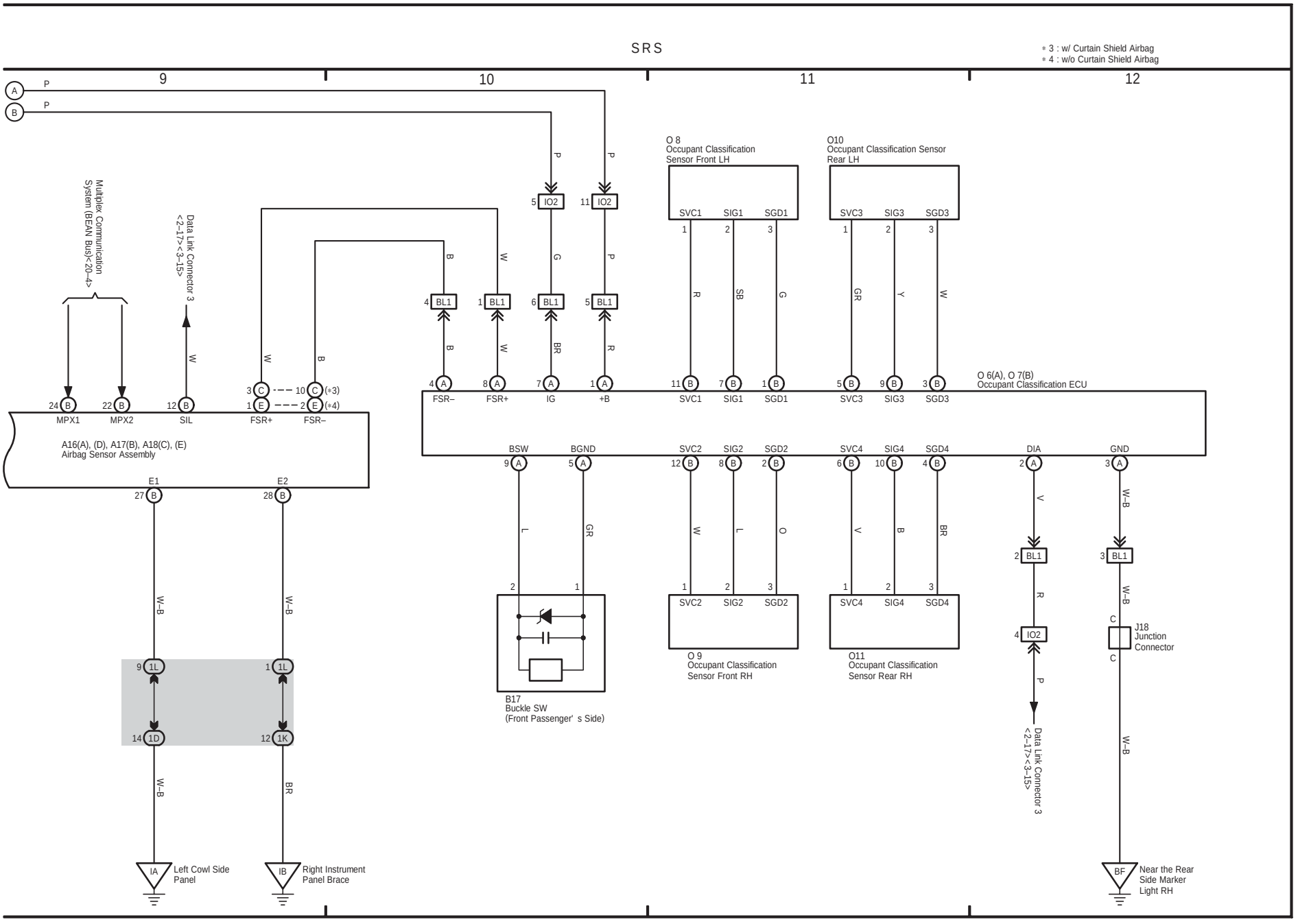

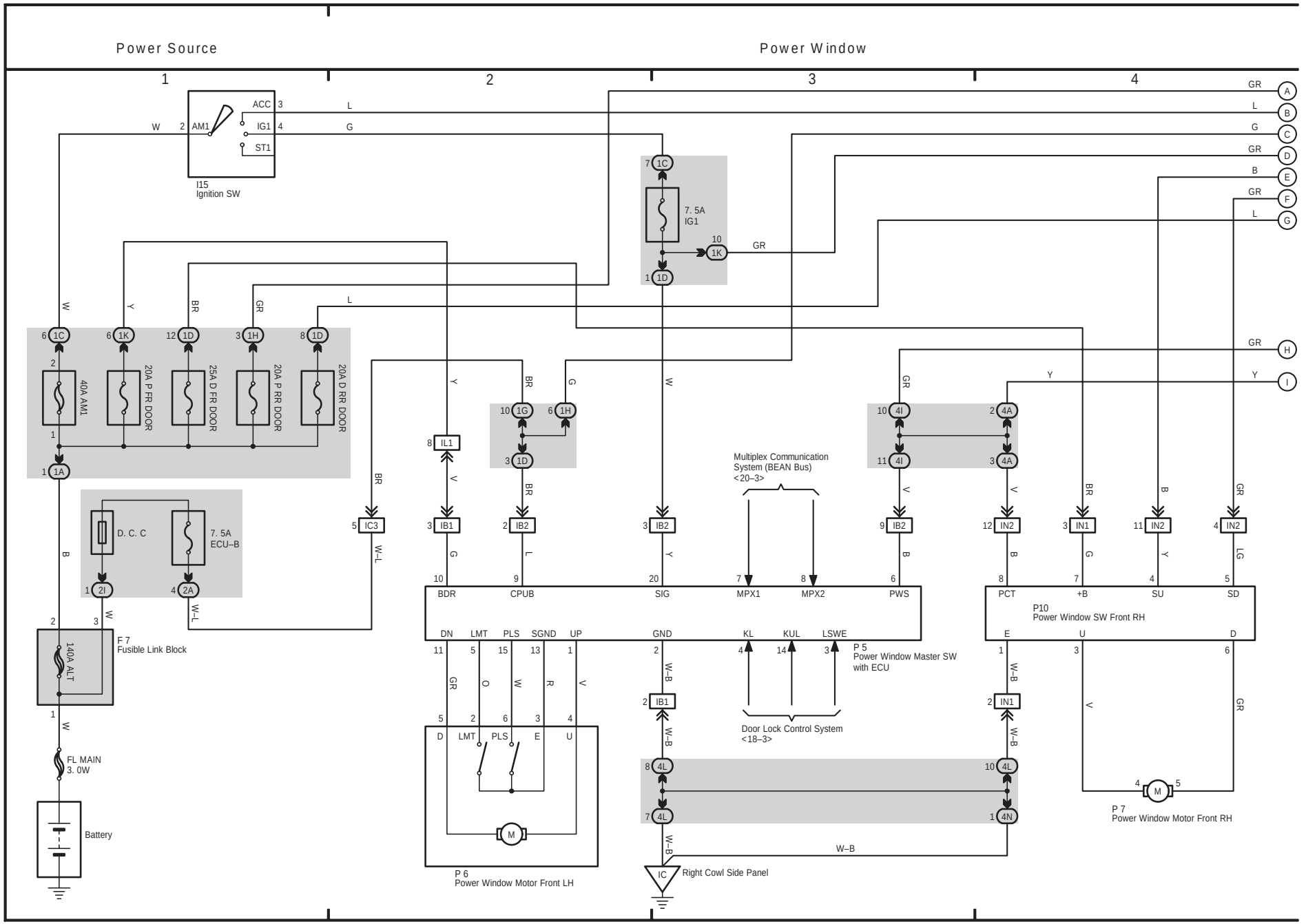

(Cont. next page)

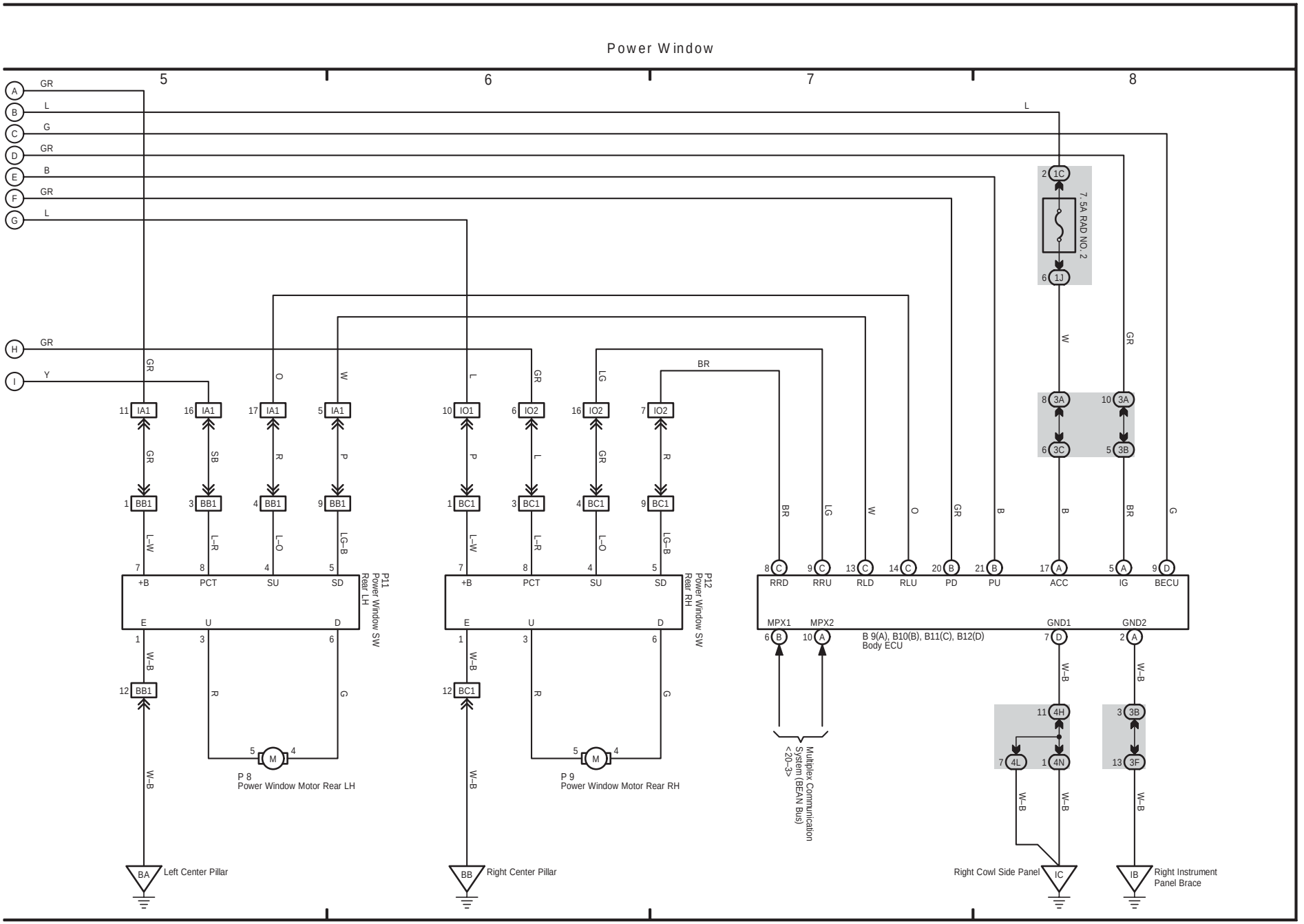
Power Window
5
6
7
8
A GR
B L
C G
D GR
E B
F GR
G L
H GR
I Y
L
2 1C
7.5A RAD NO. 2
6 1J
W
GR
8 3A
10 3A
6 3C
5 3B
11 IA1
16 IA1
17 IA1
5 IA1
10 IO1
6 IO2
16 IO2
7 IO2
GR
SB
R
P
P
L
GR
R
BR
1 BB1
3 BB1
4 BB1
9 BB1
1 BC1
3 BC1
4 BC1
9 BC1
L–W
L–R
L–O
LG–B
BR
LG
W
O
GR
B
B
BR
G
7 8 4 5
+B PCT SU SD
P11 Power Window SW Rear LH
P12 Power Window SW Rear RH
8 C 9 C 13 C 14 C 20 B 21 B 17 A 5 A 9 D
RRD RRU RLD RLU PD PU ACC IG BECU
E U D
1 3 6
W–B
R
G
12 BB1
12 BC1
5 M 4
P 8
Power Window Motor Rear LH
P 9
Power Window Motor Rear RH
MPX1 MPX2
6 B 10 A
B 9(A), B10(B), B11(C), B12(D)
Body ECU
GND1 GND2
7 D 2 A
11 4H
7 4L 1 4N
3 3B
13 3F
Multiplex Communication System (BEAN Bus) <20–3>
BA Left Center Pillar
BB Right Center Pillar
Right Cowl Side Panel
IC
IB
Right Instrument Panel Brace

(Cont. next page)

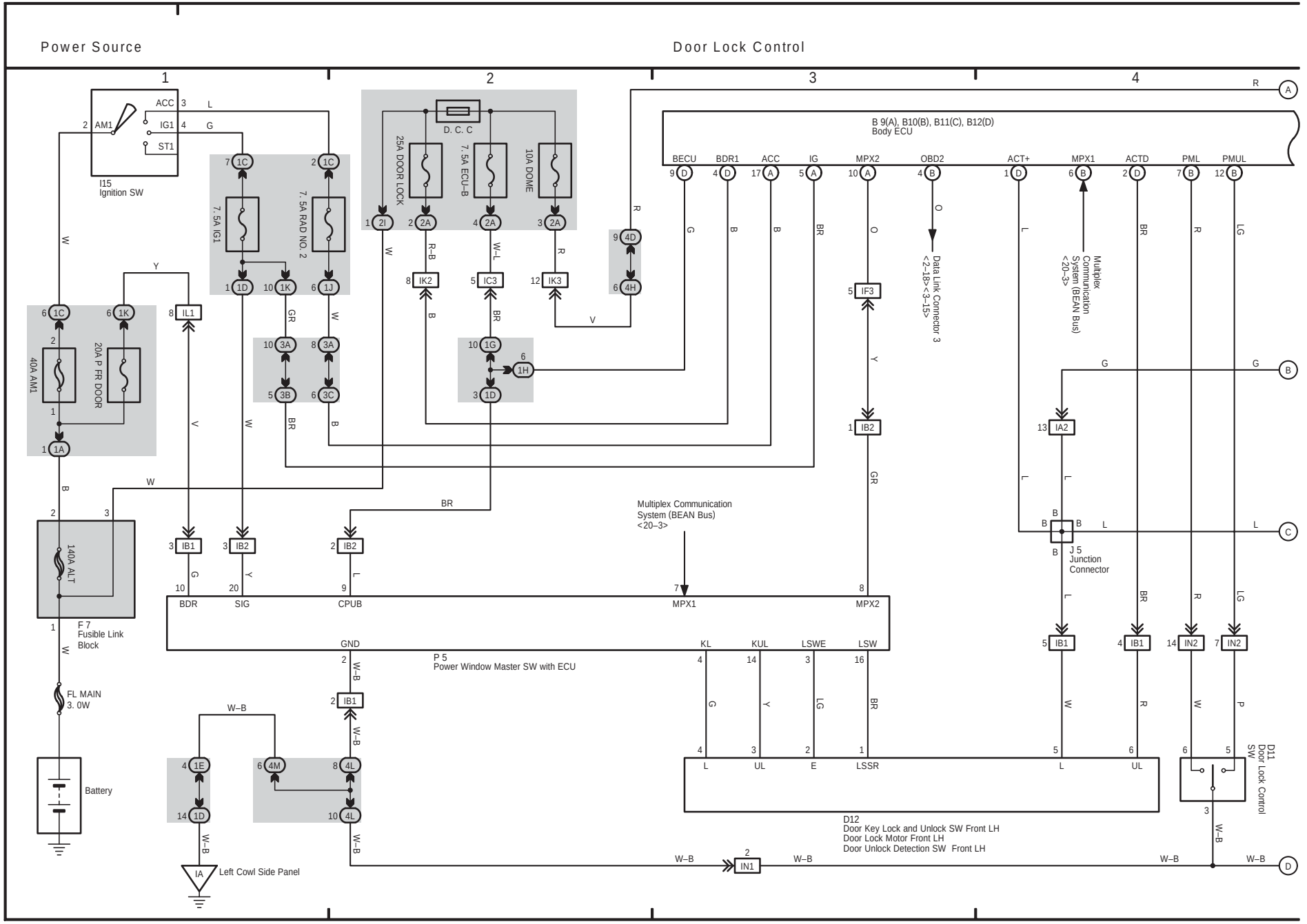

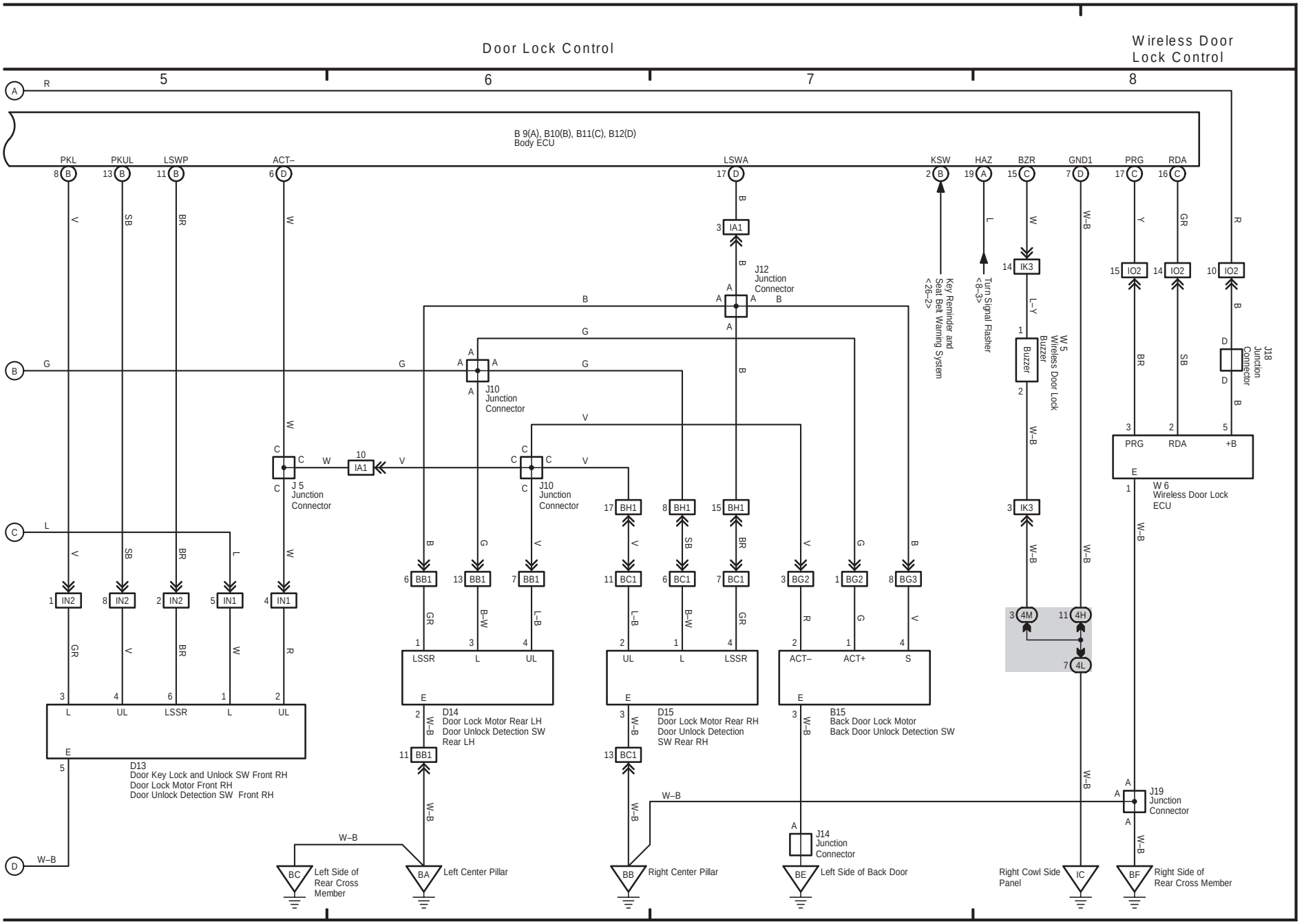
Door Lock Control
Wireless Door Lock Control
5
6
7
8
B 9(A), B10(B), B11(C), B12(D) Body ECU
PKL
PKUL
LSWP
ACT–
LSWA
KSW
HAZ
BZR
GND1
PRG
RDA
J12 Junction Connector
J10 Junction Connector
J 5 Junction Connector
J10 Junction Connector
Key Reminder and Seat Belt Warning System <26–2>
Turn Signal Flasher <8–3>
W 5 Wireless Door Lock Buzzer
J18 Junction Connector
W 6 Wireless Door Lock ECU
D13 Door Key Lock and Unlock SW Front RH Door Lock Motor Front RH Door Unlock Detection SW Front RH
D14 Door Lock Motor Rear LH Door Unlock Detection SW Rear LH
D15 Door Lock Motor Rear RH Door Unlock Detection SW Rear RH
B15 Back Door Lock Motor Back Door Unlock Detection SW
J19 Junction Connector
J14 Junction Connector
BC Left Side of Rear Cross Member
BA Left Center Pillar
BB Right Center Pillar
BE Left Side of Back Door
Right Cowl Side Panel
IC
BF Right Side of Rear Cross Member

19 HIGHLANDER

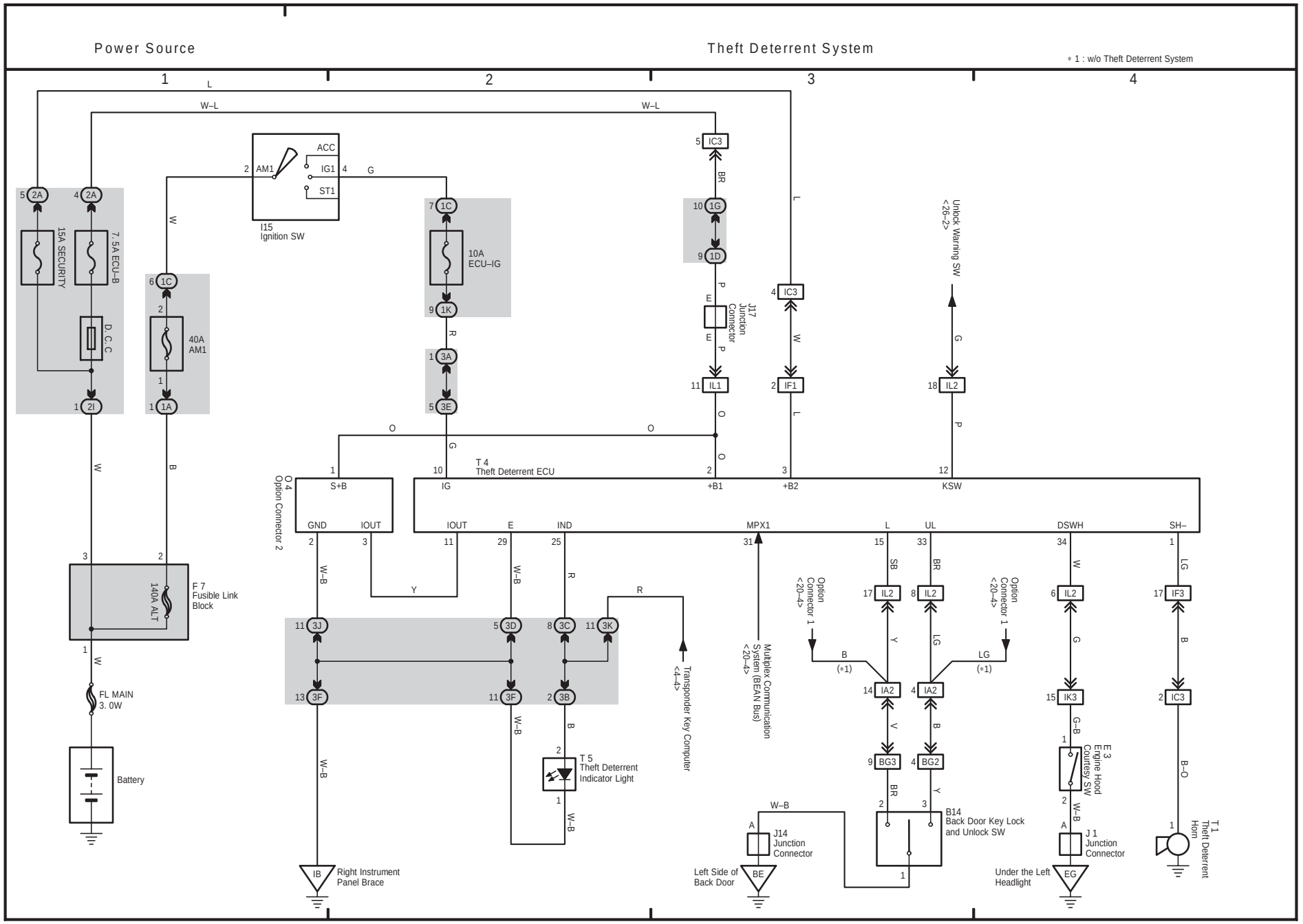

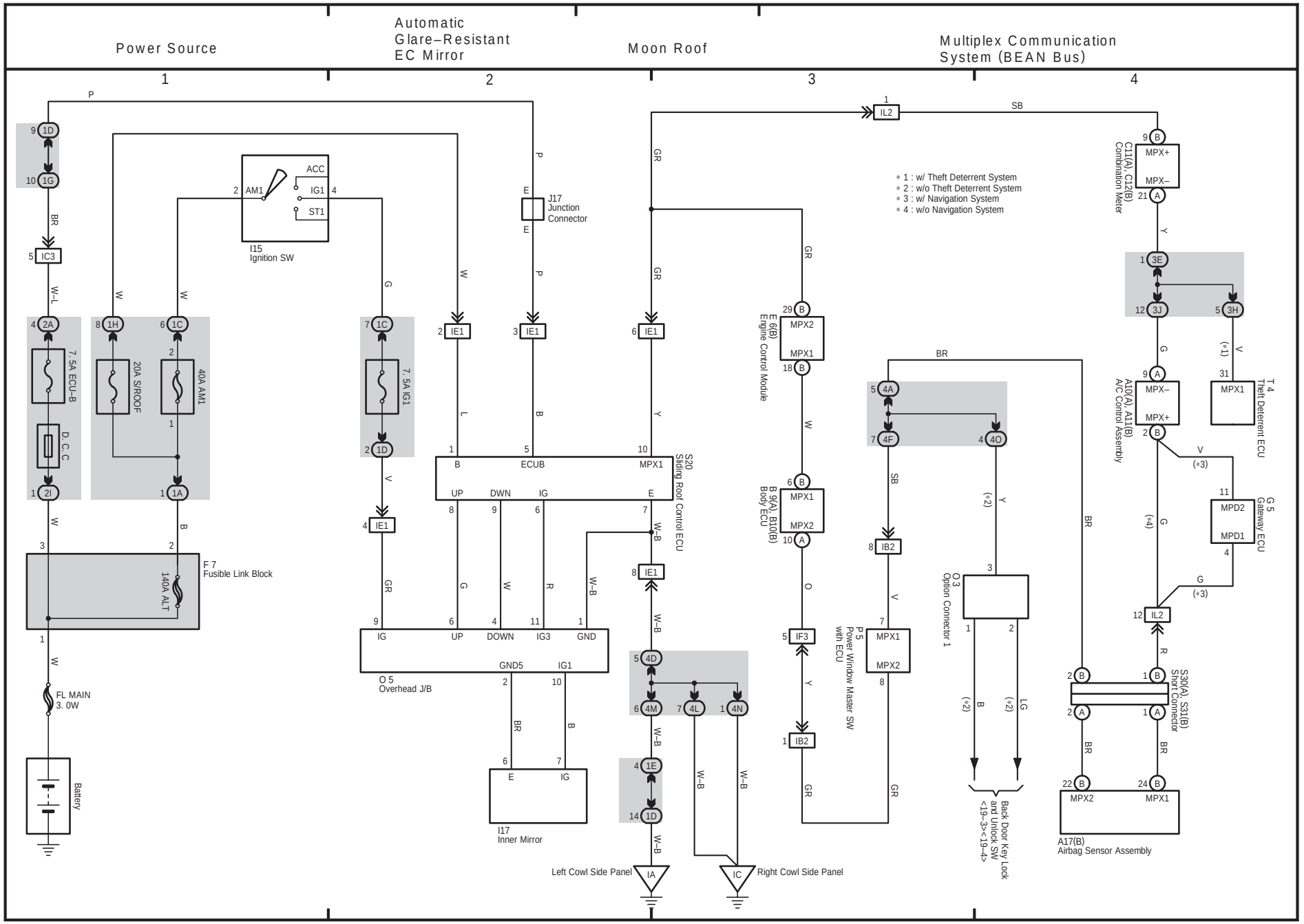
Power Source
Automatic Glare–Resistant EC Mirror
Moon Roof
Multiplex Communication System (BEAN Bus)
1
2
3
4
＊1 : w/ Theft Deterrent System
＊2 : w/o Theft Deterrent System
＊3 : w/ Navigation System
＊4 : w/o Navigation System
I15 Ignition SW
J17 Junction Connector
E 6(B) Engine Control Module
B 9(A), B10(B) Body ECU
S20 Sliding Roof Control ECU
P 5 Power Window Master SW with ECU
O 3 Option Connector 1
O 5 Overhead J/B
I17 Inner Mirror
C11(A), C12(B) Combination Meter
A10(A), A11(B) A/C Control Assembly
T 4 Theft Deterrent ECU
G 5 Gateway ECU
S30(A), S31(B) Short Connector
A17(B) Airbag Sensor Assembly
Back Door Key Lock and Unlock SW <19–3><19–4>
F 7 Fusible Link Block
FL MAIN 3. 0W
Battery
7. 5A ECU–B
D. C. C
20A S/ROOF
40A AM1
140A ALT
7. 5A IG1
Left Cowl Side Panel
Right Cowl Side Panel

21 HIGHLANDER

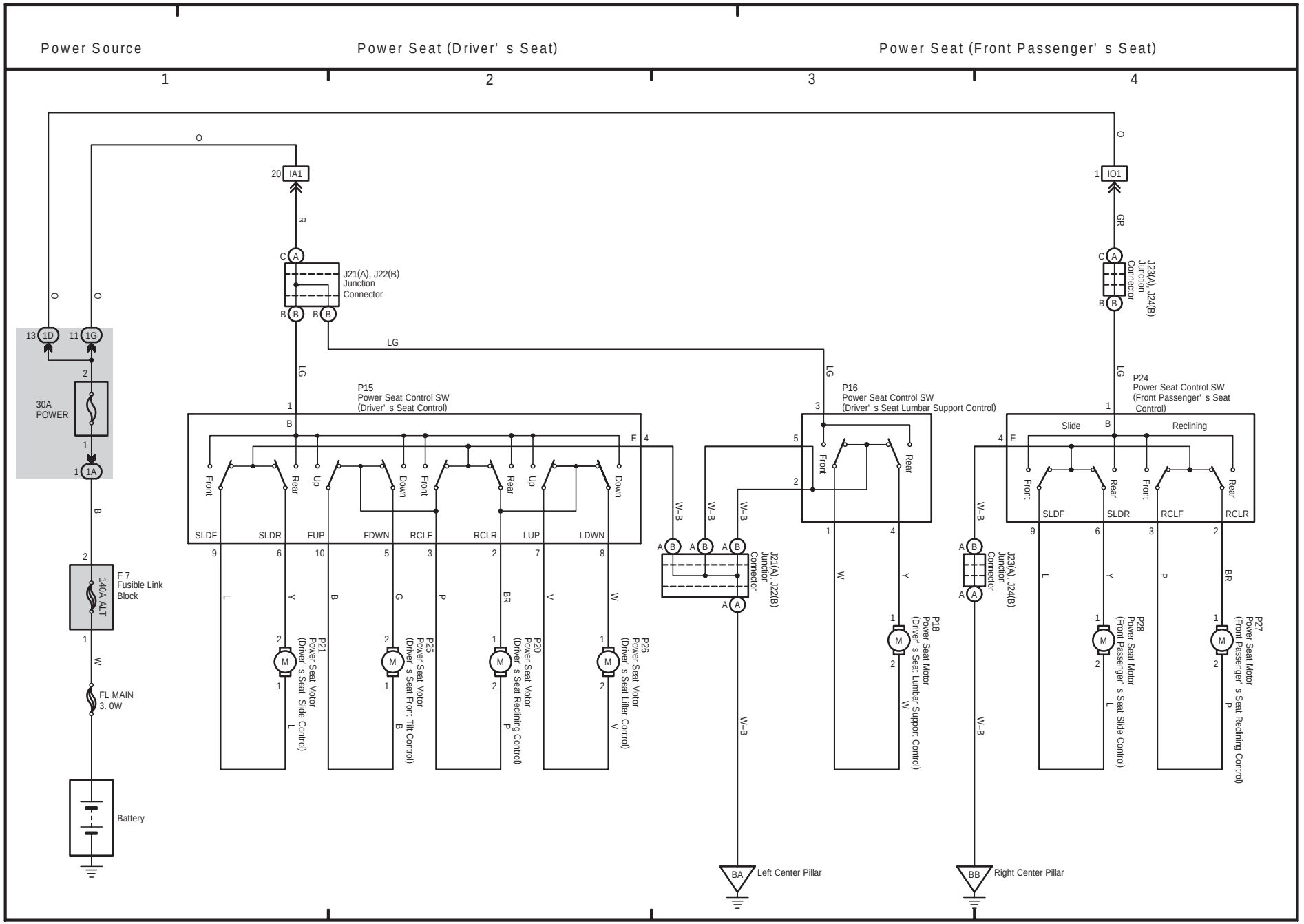

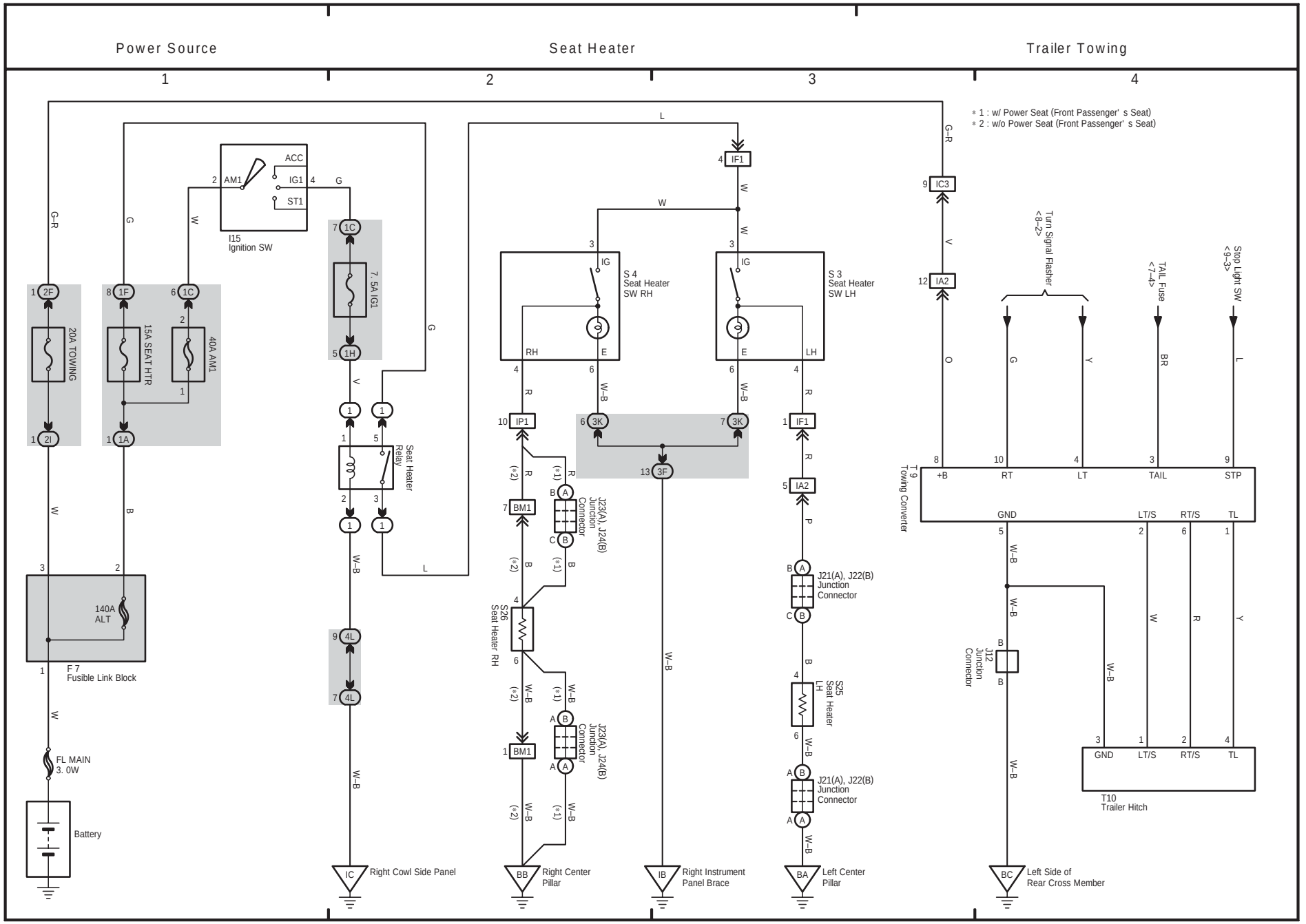
Power Source
Seat Heater
Trailer Towing
1
2
3
4
* 1 : w/ Power Seat (Front Passenger' s Seat)
* 2 : w/o Power Seat (Front Passenger' s Seat)
I15
Ignition SW
ACC
IG1
ST1
AM1
20A TOWING
15A SEAT HTR
40A AM1
7. 5A IG1
Seat Heater Relay
140A ALT
F 7
Fusible Link Block
FL MAIN
3. 0W
Battery
S 4
Seat Heater SW RH
S 3
Seat Heater SW LH
IG
RH
LH
E
S26
Seat Heater RH
S25
Seat Heater LH
J23(A), J24(B)
Junction Connector
J21(A), J22(B)
Junction Connector
J12
Junction Connector
Turn Signal Flasher
<8–2>
TAIL Fuse
<7–4>
Stop Light SW
<9–3>
T9
Towing Converter
+B
RT
LT
TAIL
STP
GND
LT/S
RT/S
TL
T10
Trailer Hitch
IC
Right Cowl Side Panel
BB
Right Center Pillar
IB
Right Instrument Panel Brace
BA
Left Center Pillar
BC
Left Side of Rear Cross Member

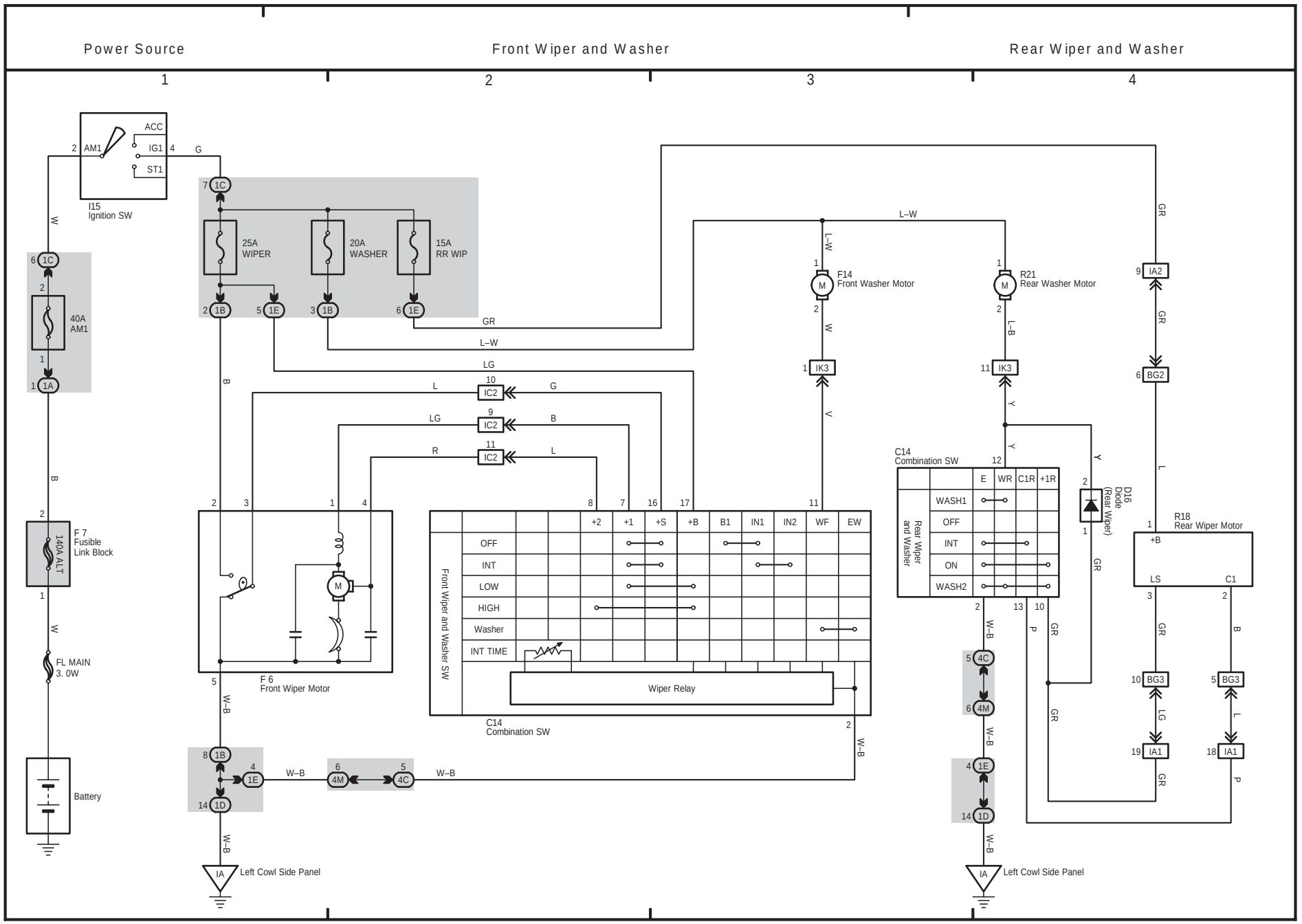
Power Source
Front Wiper and Washer
Rear Wiper and Washer
1
2
3
4
I15
Ignition SW
ACC
IG1
ST1
AM1
25A
WIPER
20A
WASHER
15A
RR WIP
40A
AM1
140A ALT
F 7
Fusible
Link Block
FL MAIN
3. 0W
Battery
F 6
Front Wiper Motor
F14
Front Washer Motor
R21
Rear Washer Motor
C14
Combination SW
Front Wiper and Washer SW
OFF
INT
LOW
HIGH
Washer
INT TIME
Wiper Relay
Rear Wiper and Washer
WASH1
OFF
INT
ON
WASH2
D16
Diode
(Rear Wiper)
R18
Rear Wiper Motor
Left Cowl Side Panel
Left Cowl Side Panel

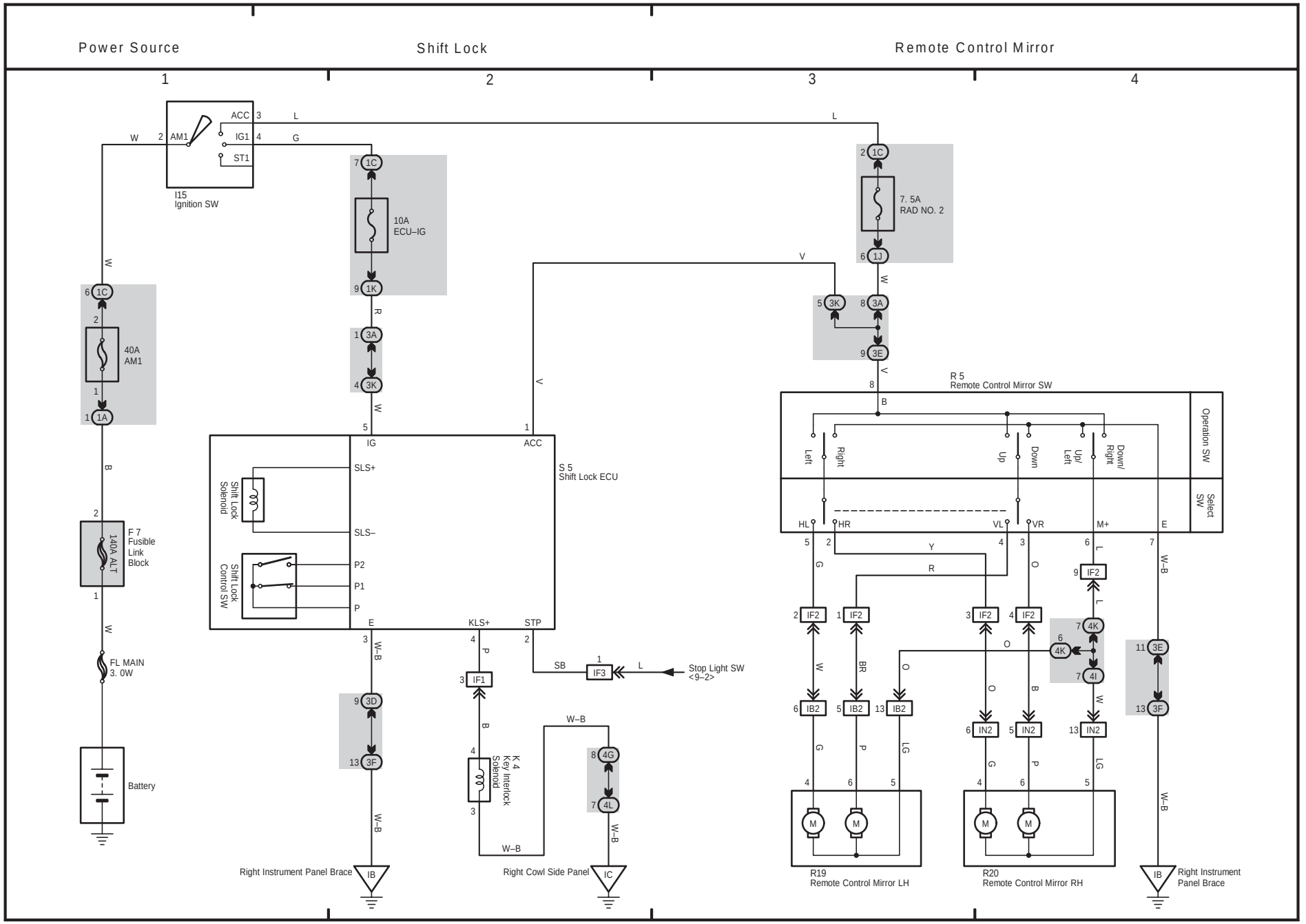
Power Source
Shift Lock
Remote Control Mirror
1
2
3
4
I15
Ignition SW
ACC
IG1
ST1
AM1
10A
ECU–IG
40A
AM1
F 7
Fusible
Link
Block
140A ALT
FL MAIN
3. 0W
Battery
7. 5A
RAD NO. 2
S 5
Shift Lock ECU
SLS+
SLS–
P2
P1
P
Shift Lock
Solenoid
Shift Lock
Control SW
IG
ACC
E
KLS+
STP
K 4
Key Interlock
Solenoid
Stop Light SW
<9–2>
R 5
Remote Control Mirror SW
Operation SW
Select
SW
Left
Right
Up
Down
Up/
Left
Down/
Right
HL
HR
VL
VR
M+
E
R19
Remote Control Mirror LH
R20
Remote Control Mirror RH
Right Instrument Panel Brace
Right Cowl Side Panel
Right Instrument
Panel Brace

25 HIGHLANDER

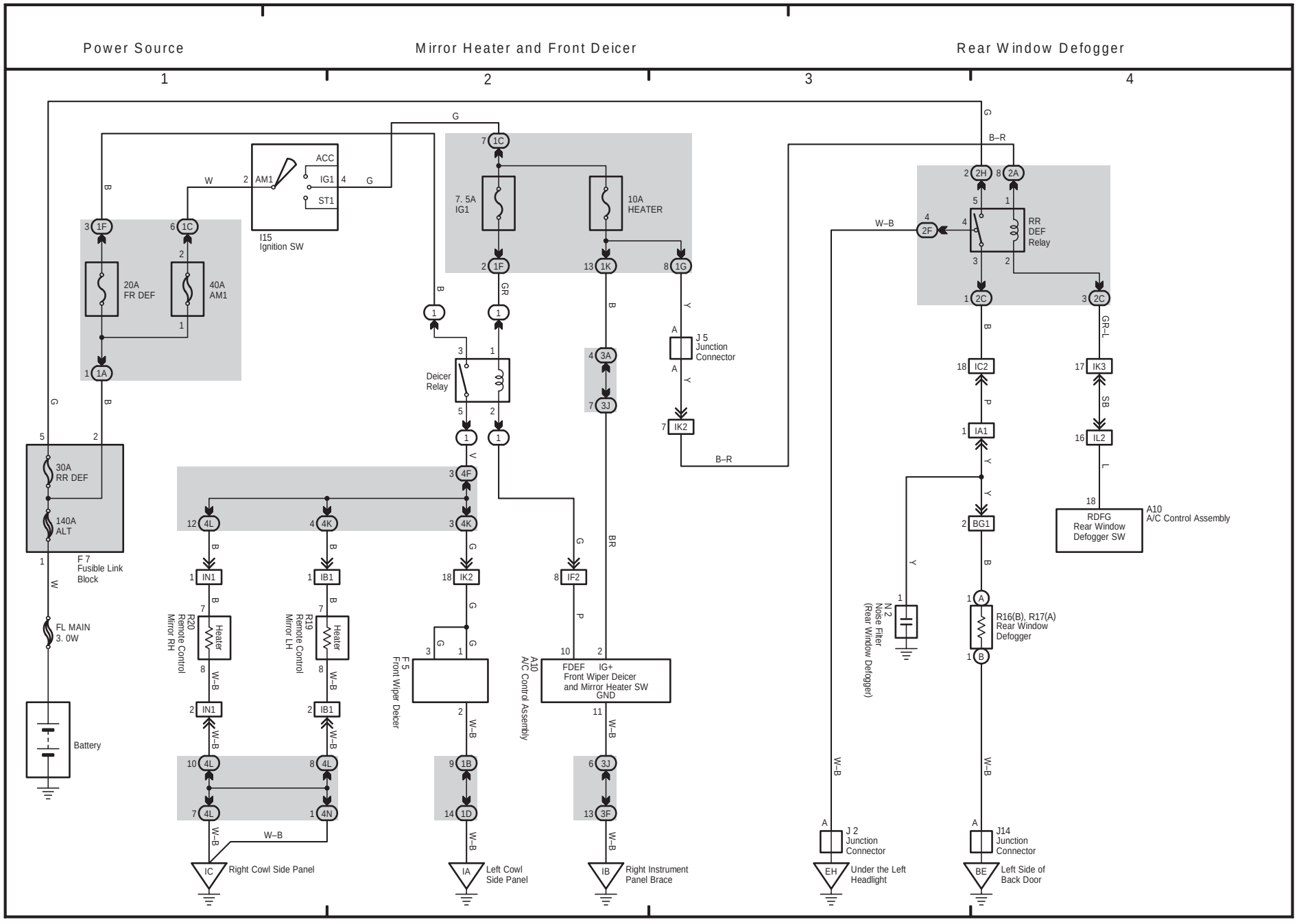

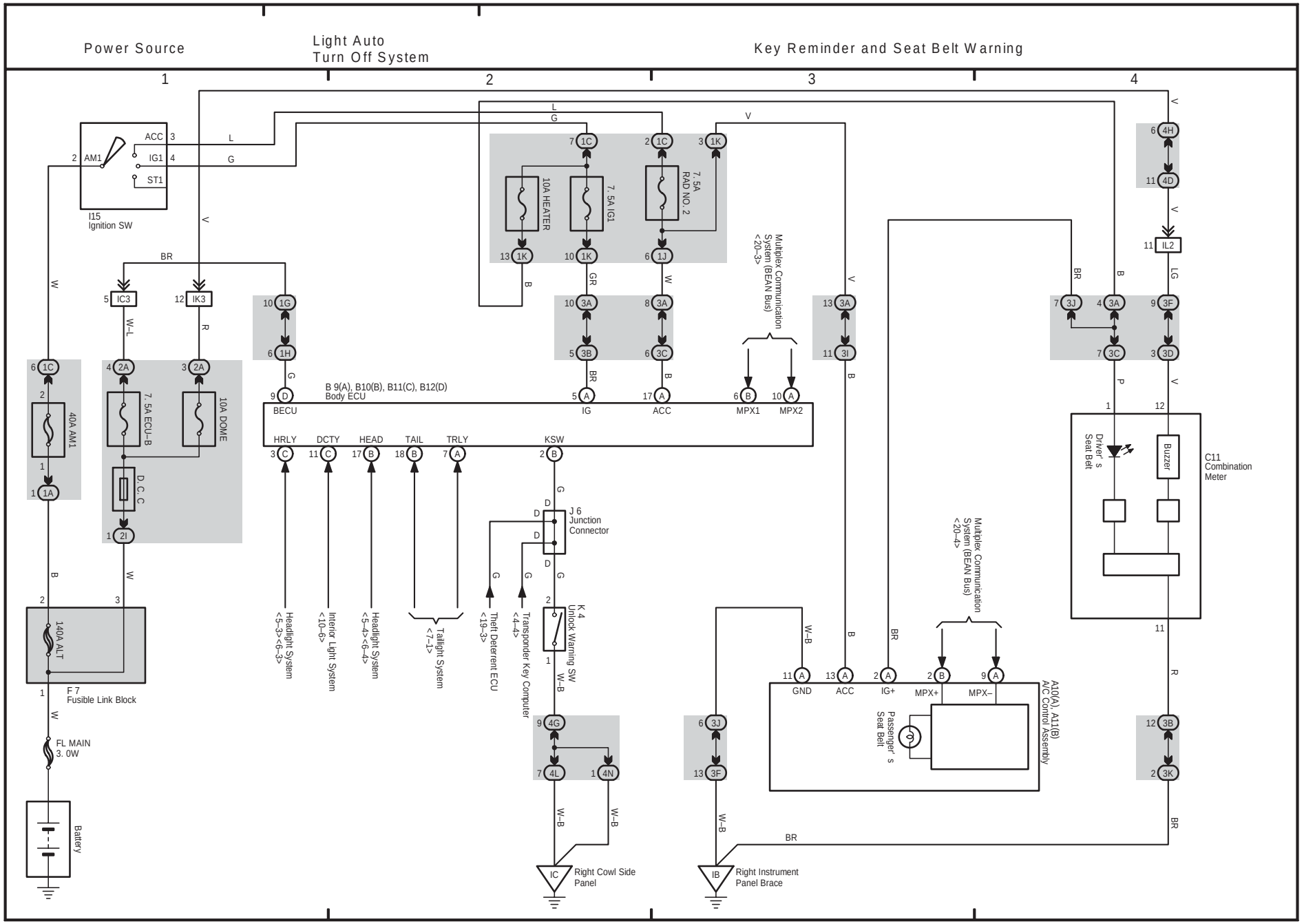
Power Source
Light Auto Turn Off System
Key Reminder and Seat Belt Warning
1
2
3
4
I15 Ignition SW
ACC
IG1
ST1
AM1
10A HEATER
7. 5A IG1
7. 5A RAD NO. 2
Multiplex Communication System (BEAN Bus) <20–3>
B 9(A), B10(B), B11(C), B12(D) Body ECU
BECU
IG
ACC
MPX1
MPX2
HRLY
DCTY
HEAD
TAIL
TRLY
KSW
40A AM1
7. 5A ECU–B
10A DOME
D. C. C
140A ALT
F 7 Fusible Link Block
FL MAIN 3. 0W
Battery
J 6 Junction Connector
K 4 Unlock Warning SW
Headlight System <5–3> <6–3>
Interior Light System <10–6>
Headlight System <5–4> <6–4>
Taillight System <7–1>
Theft Deterrent ECU <19–3>
Transponder Key Computer <4–4>
Right Cowl Side Panel
Right Instrument Panel Brace
Multiplex Communication System (BEAN Bus) <20–4>
GND
ACC
IG+
MPX+
MPX–
A10(A), A11(B) A/C Control Assembly
Passenger's Seat Belt
Driver's Seat Belt
Buzzer
C11 Combination Meter

27 HIGHLANDER

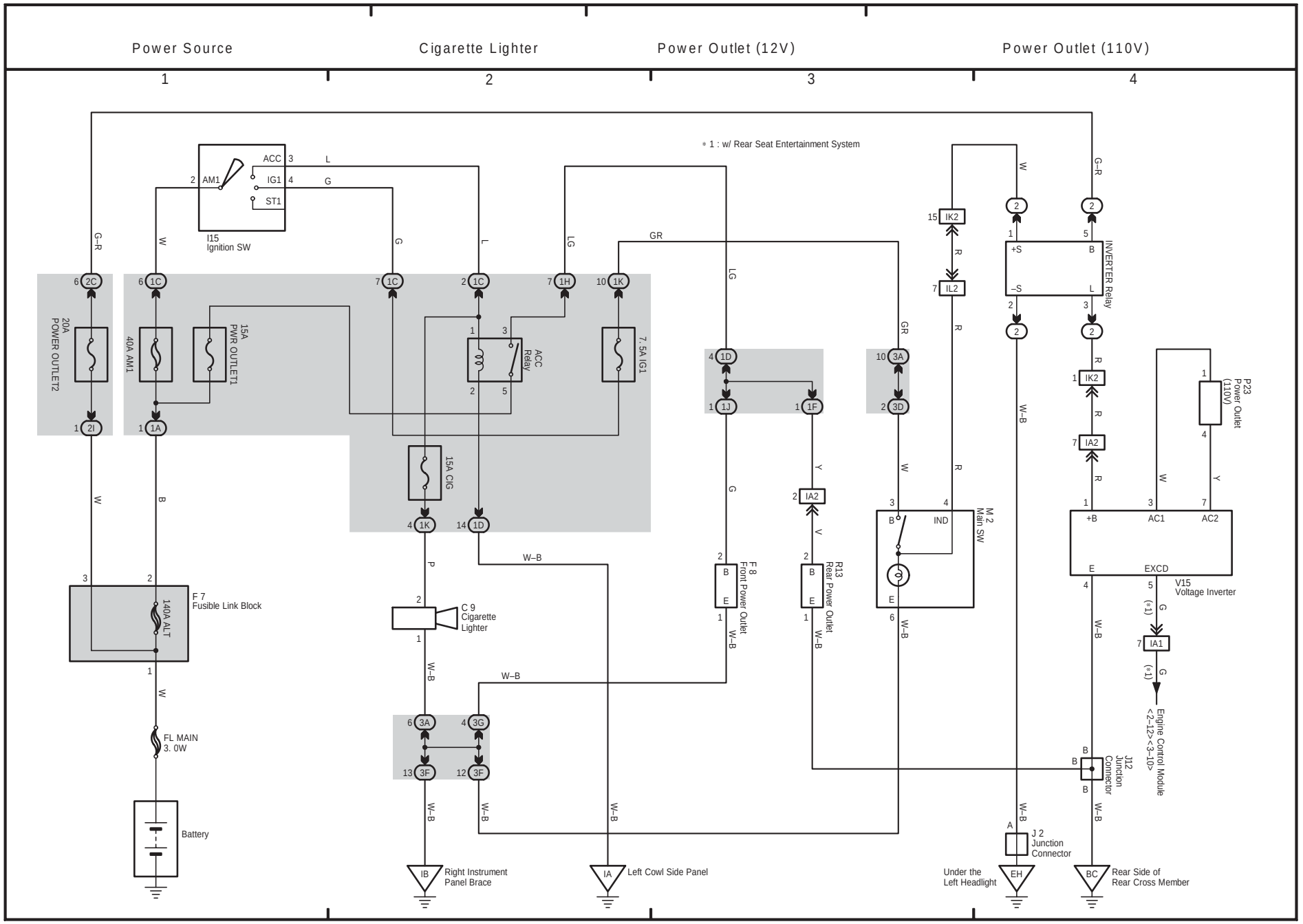

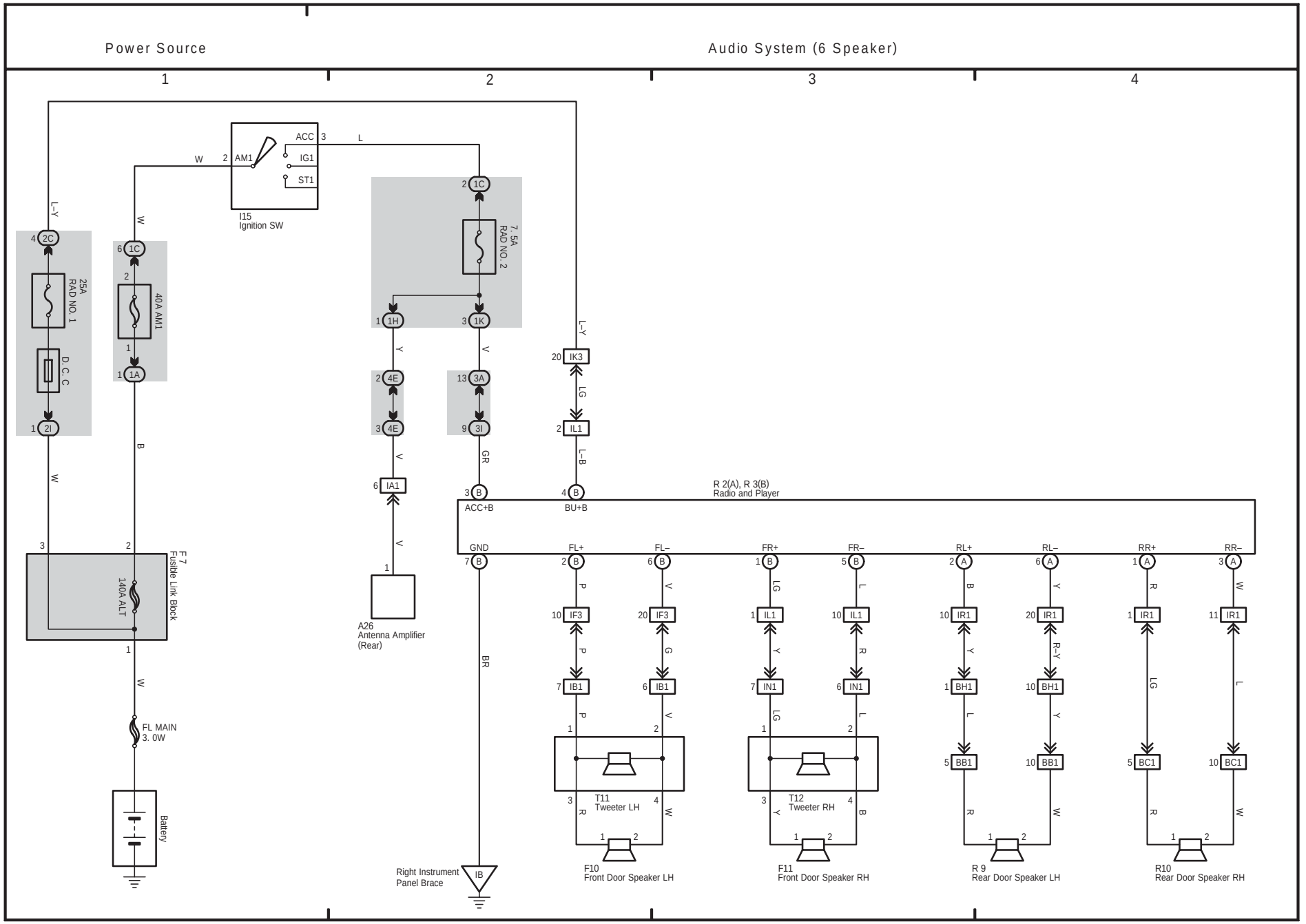
Power Source
Audio System (6 Speaker)
1
2
3
4
ACC
AM1
IG1
ST1
I15
Ignition SW
7. 5A
RAD NO. 2
25A
RAD NO. 1
40A AM1
D. C. C
140A ALT
F 7
Fusible Link Block
FL MAIN
3. 0W
Battery
A26
Antenna Amplifier
(Rear)
R 2(A), R 3(B)
Radio and Player
ACC+B
BU+B
GND
FL+
FL–
FR+
FR–
RL+
RL–
RR+
RR–
T11
Tweeter LH
T12
Tweeter RH
F10
Front Door Speaker LH
F11
Front Door Speaker RH
R 9
Rear Door Speaker LH
R10
Rear Door Speaker RH
Right Instrument
Panel Brace
IB

29 HIGHLANDER

(Cont. next page)

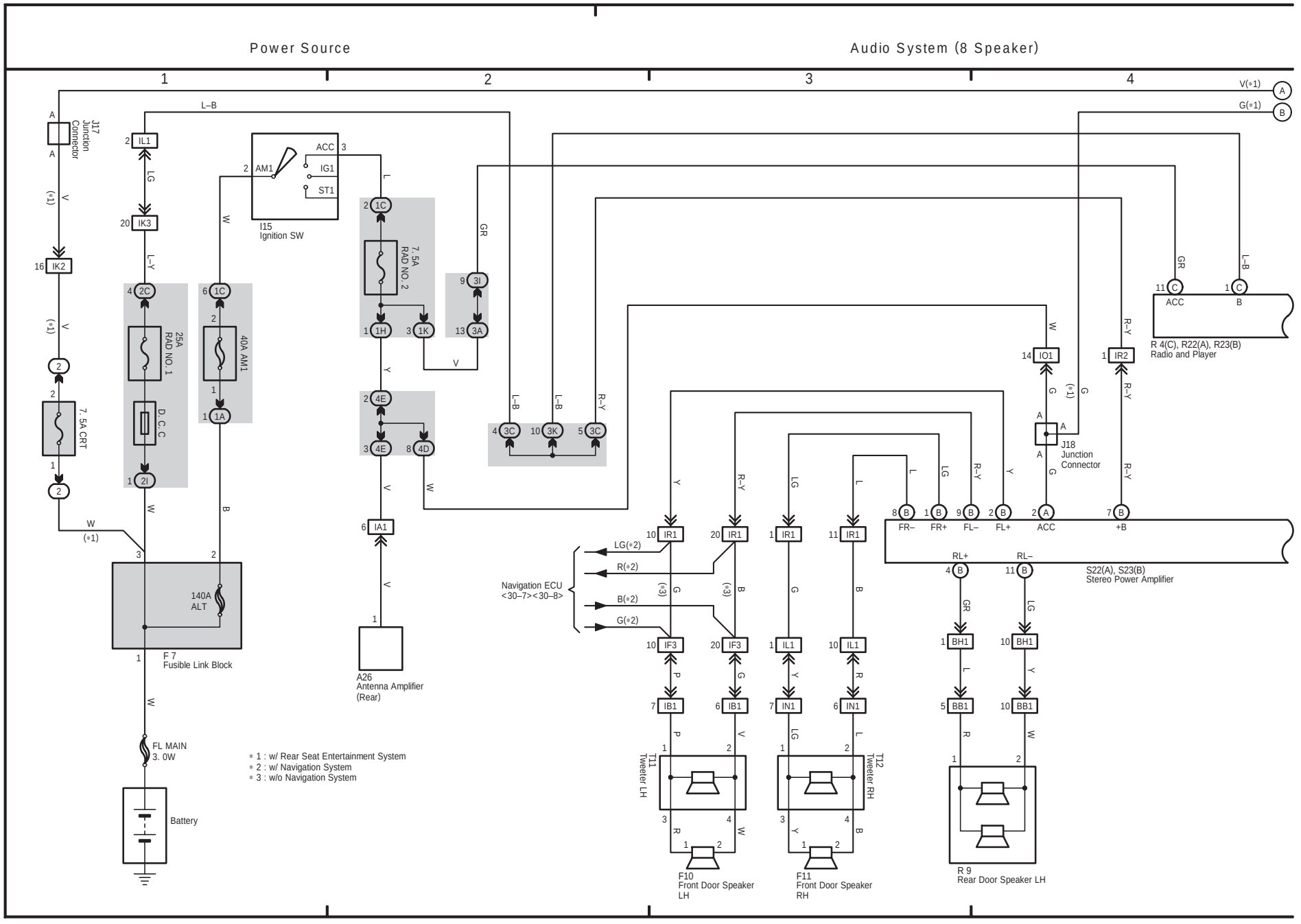

(Cont. next page)

Audio System (8 Speaker)

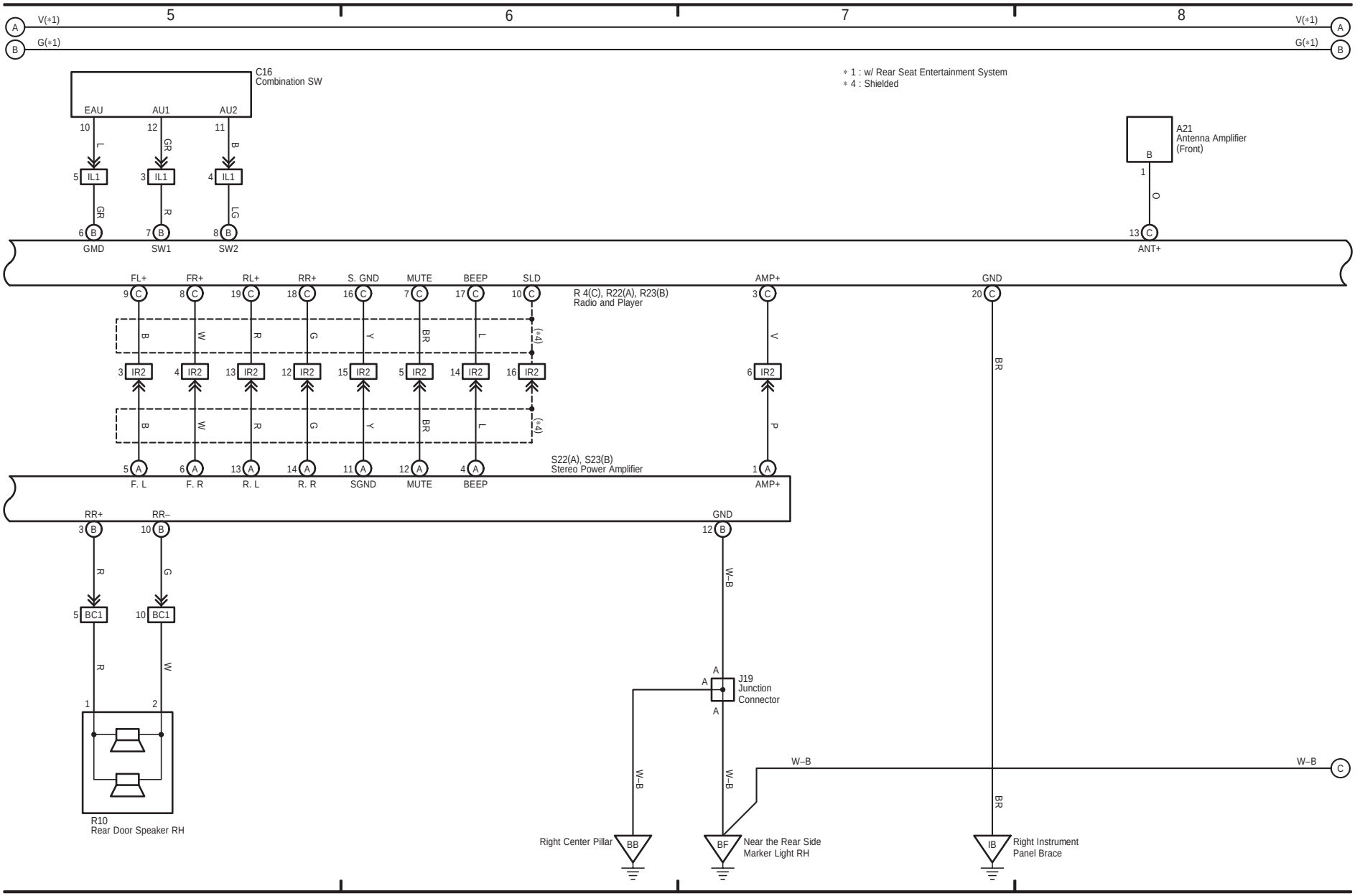

29 HIGHLANDER (Cont' d)

(Cont. next page)

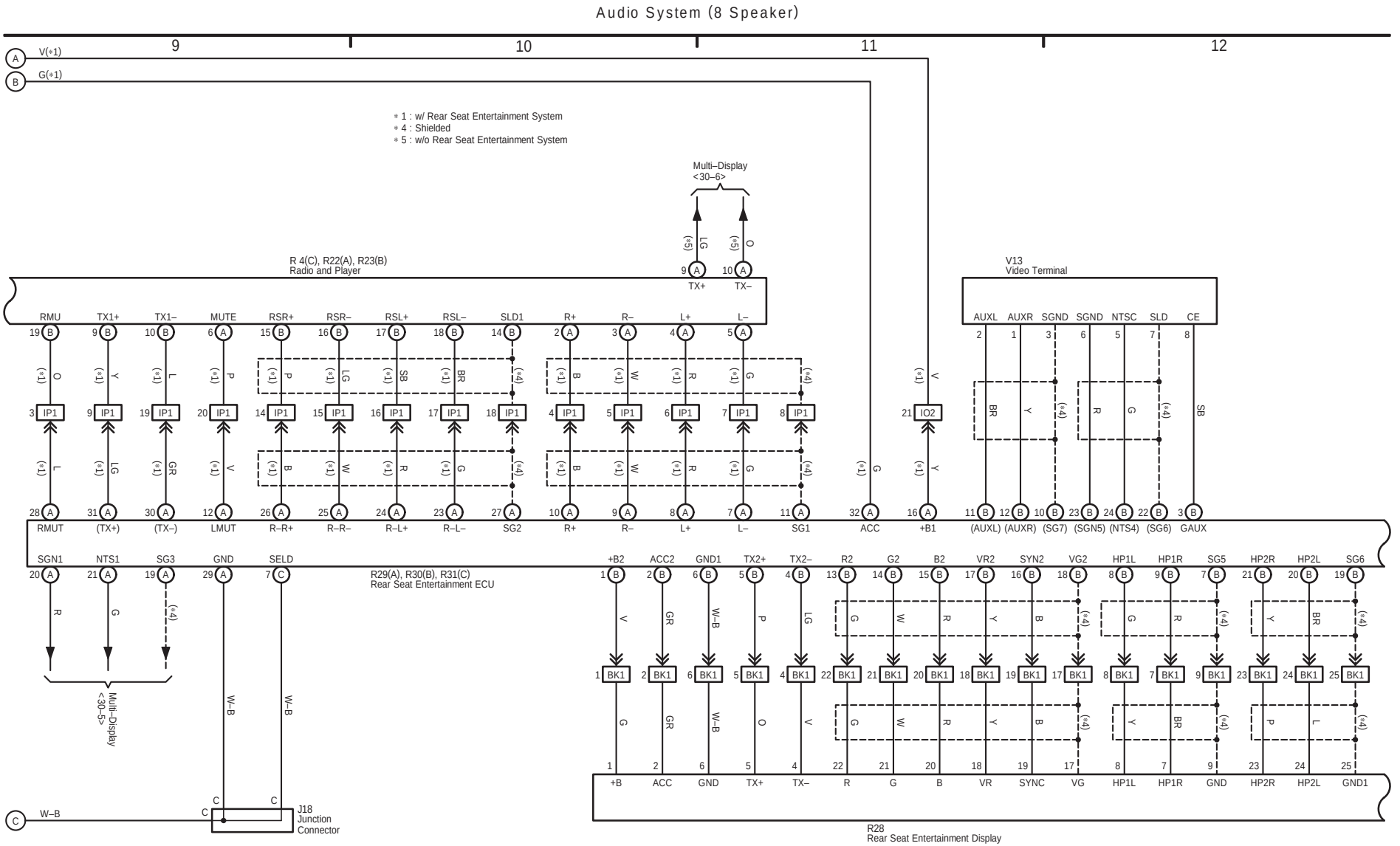

Audio System (8 Speaker)

13 14 15 16

* 4 : Shielded

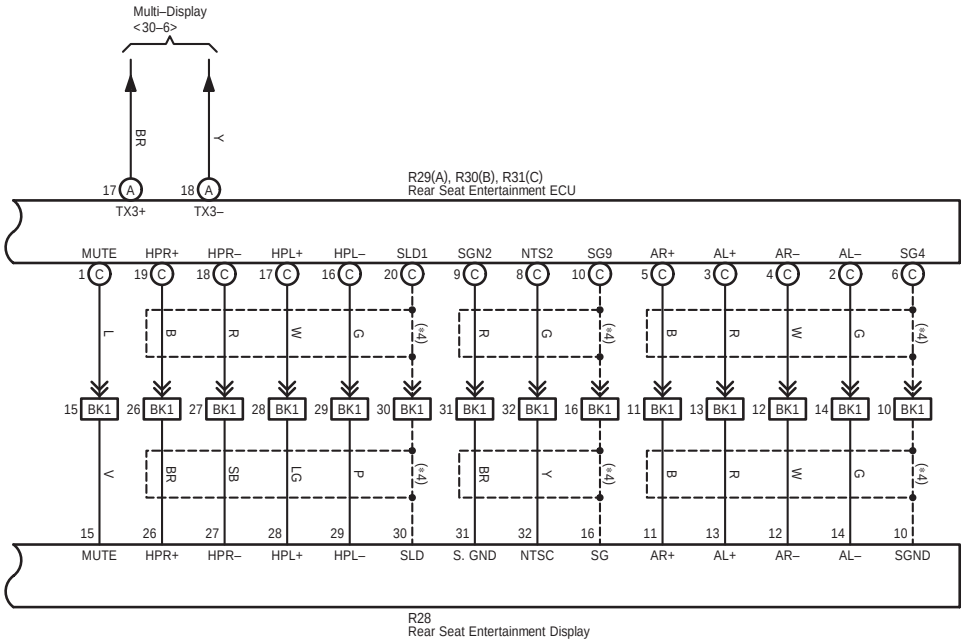

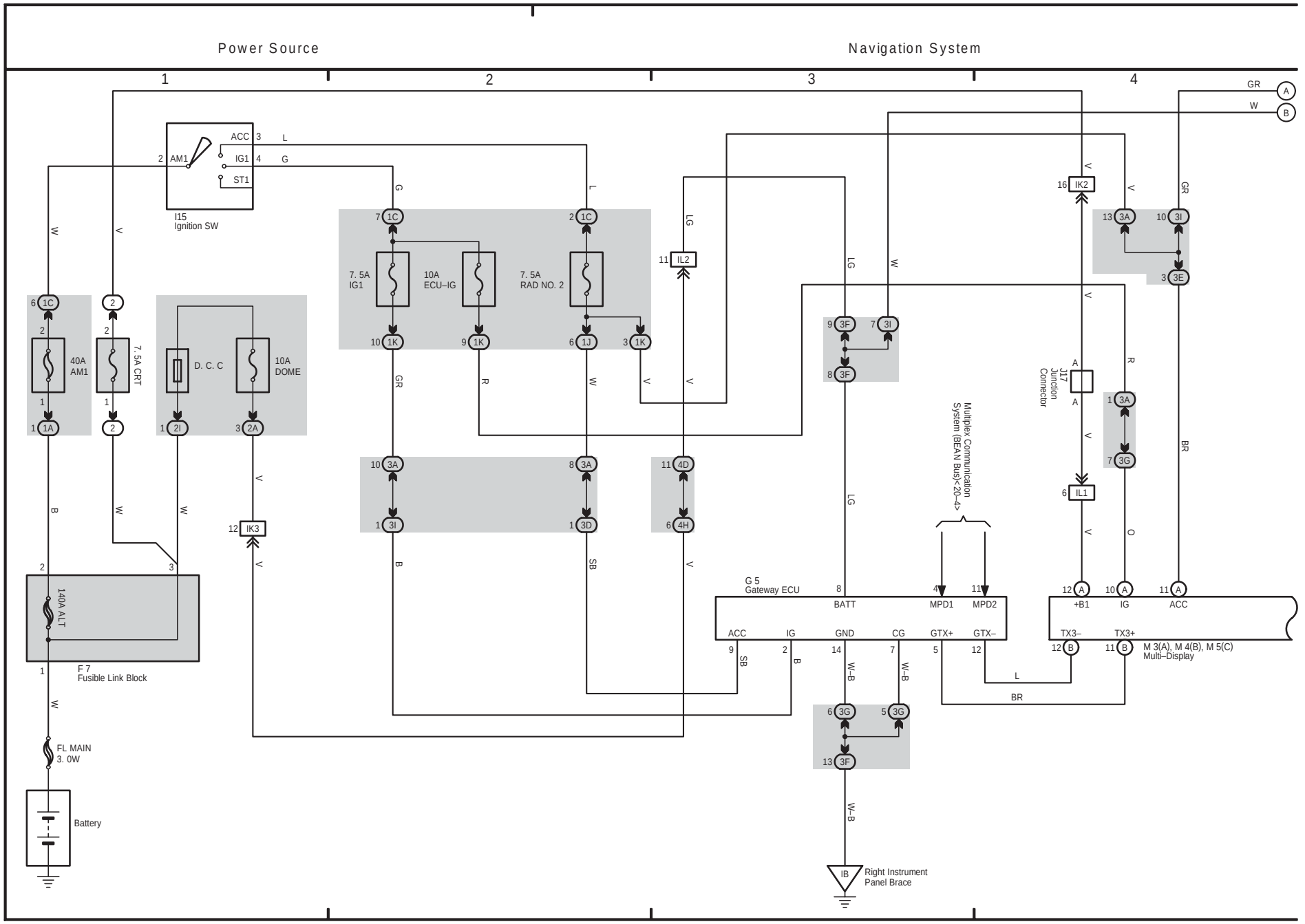
Power Source
Navigation System
1
2
3
4
I15
Ignition SW
ACC
IG1
ST1
AM1
40A
AM1
7. 5A CRT
D. C. C
10A
DOME
7. 5A
IG1
10A
ECU–IG
7. 5A
RAD NO. 2
IL2
IK2
IK3
IL1
J17
Junction
Connector
140A ALT
F 7
Fusible Link Block
FL MAIN
3. 0W
Battery
G 5
Gateway ECU
BATT
MPD1
MPD2
ACC
IG
GND
CG
GTX+
GTX–
+B1
IG
ACC
TX3–
TX3+
Multiplex Communication
System (BEAN Bus)< 20–4>
M 3(A), M 4(B), M 5(C)
Multi–Display
IB
Right Instrument
Panel Brace

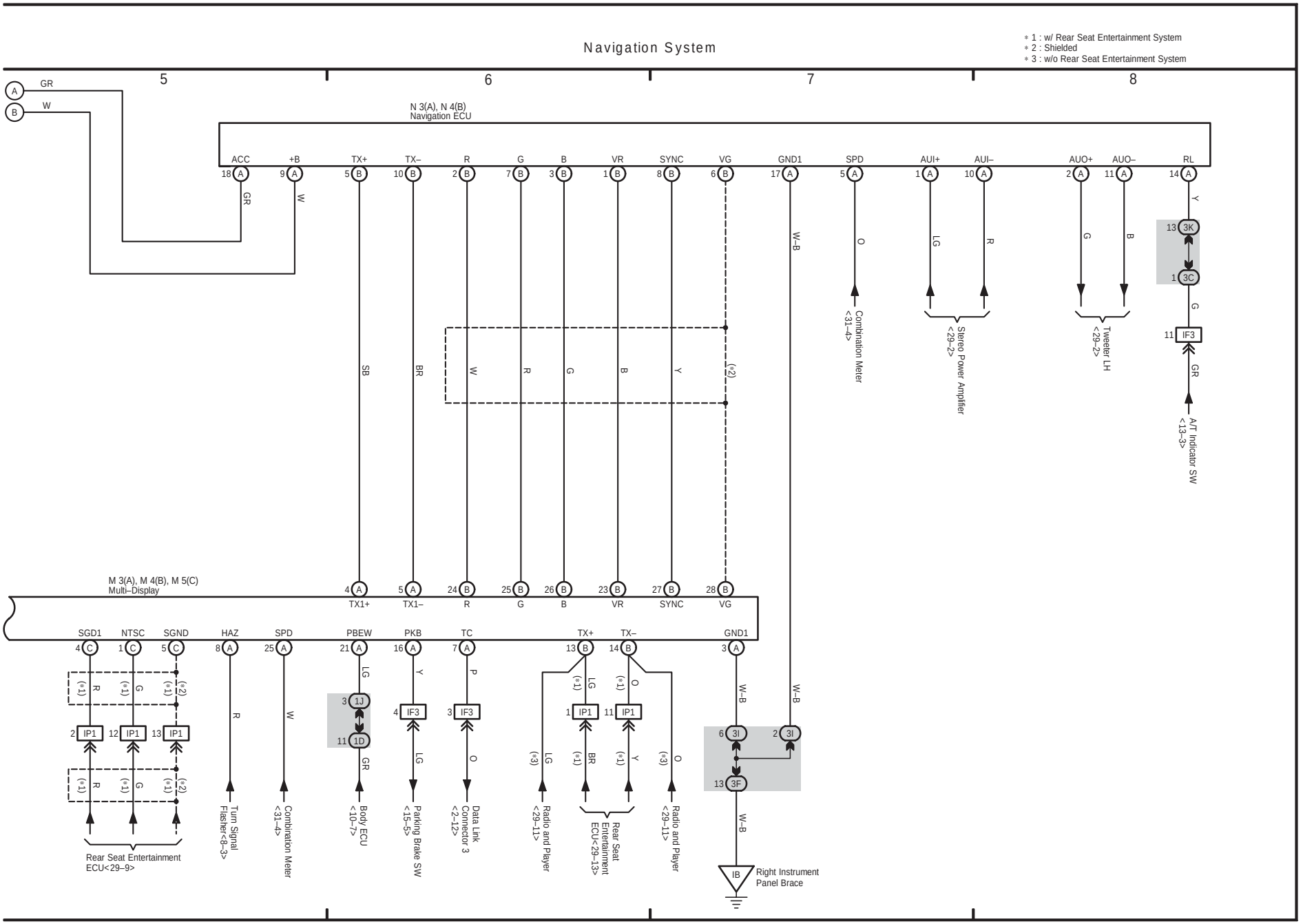
Navigation System
* 1 : w/ Rear Seat Entertainment System
* 2 : Shielded
* 3 : w/o Rear Seat Entertainment System
5
6
7
8
N 3(A), N 4(B)
Navigation ECU
ACC
+B
TX+
TX–
R
G
B
VR
SYNC
VG
GND1
SPD
AUI+
AUI–
AUO+
AUO–
RL
M 3(A), M 4(B), M 5(C)
Multi–Display
TX1+
TX1–
R
G
B
VR
SYNC
VG
SGD1
NTSC
SGND
HAZ
SPD
PBEW
PKB
TC
TX+
TX–
GND1
Combination Meter <31–4>
Stereo Power Amplifier <29–2>
Tweeter LH <29–2>
A/T Indicator SW <13–3>
Rear Seat Entertainment ECU<29–9>
Turn Signal Flasher<8–3>
Combination Meter <31–4>
Body ECU <10–7>
Parking Brake SW <15–5>
Data Link Connector 3 <2–12>
Radio and Player <29–11>
Rear Seat Entertainment ECU<29–13>
Radio and Player <29–11>
Right Instrument Panel Brace

31 HIGHLANDER

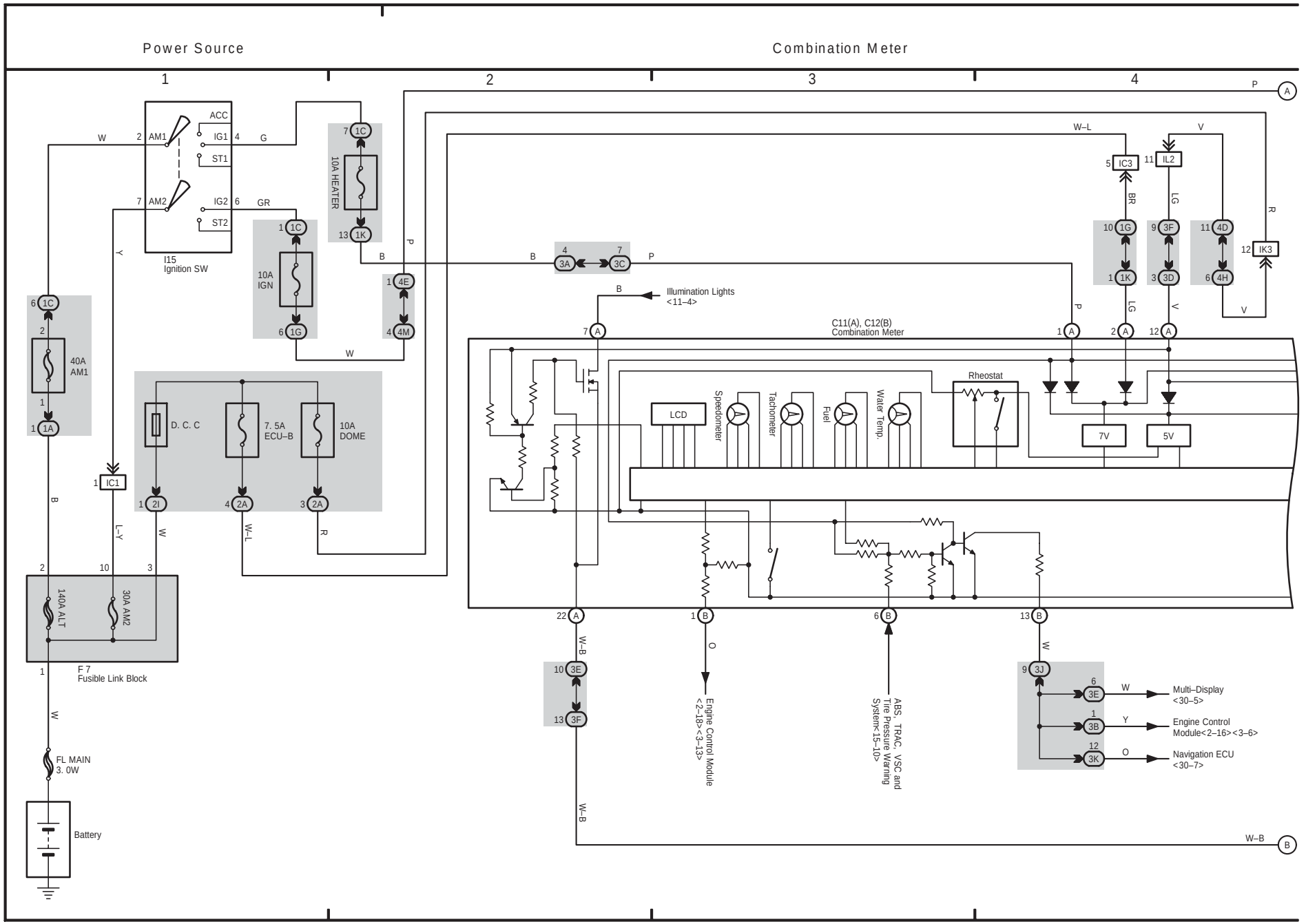

(Cont. next page)

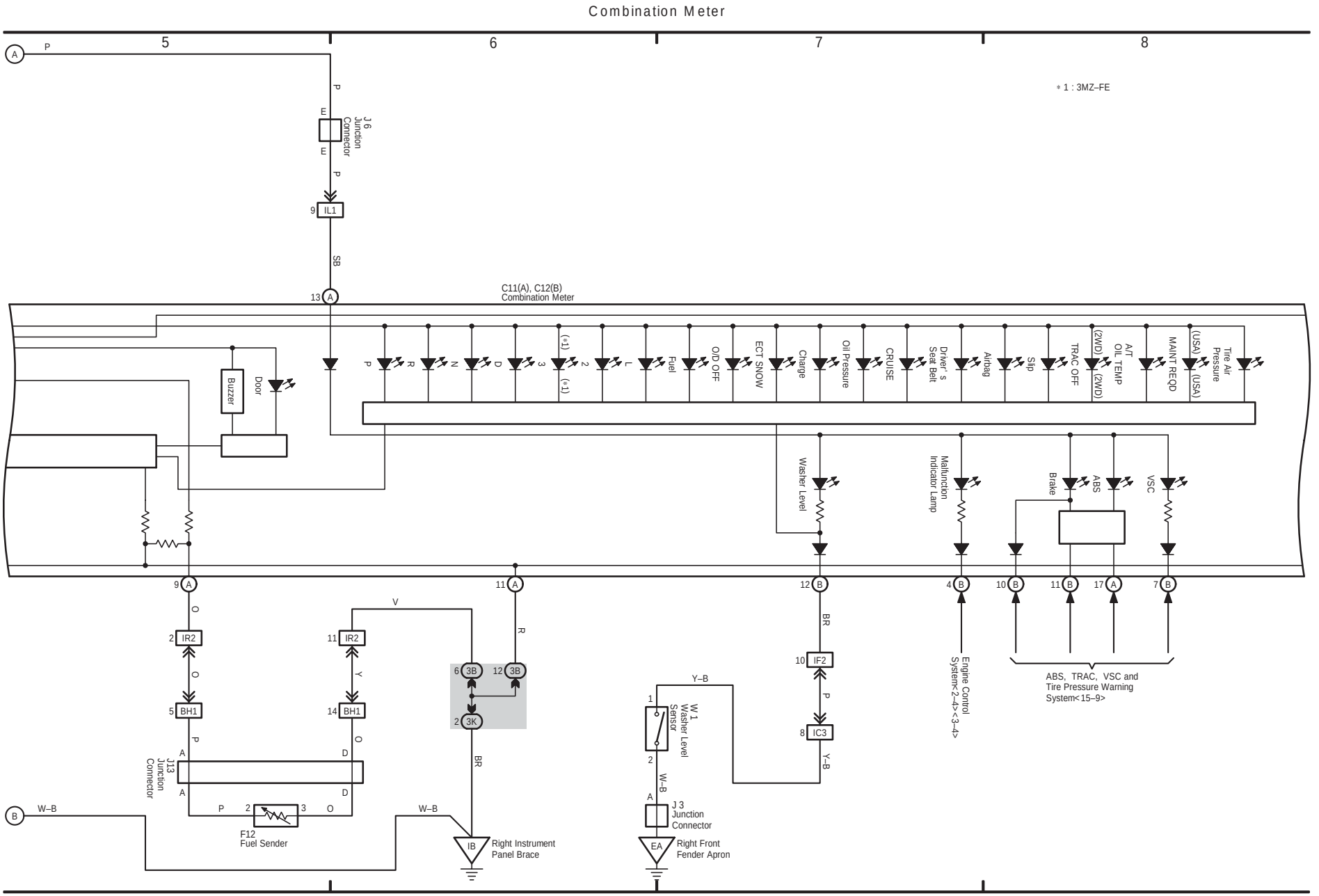

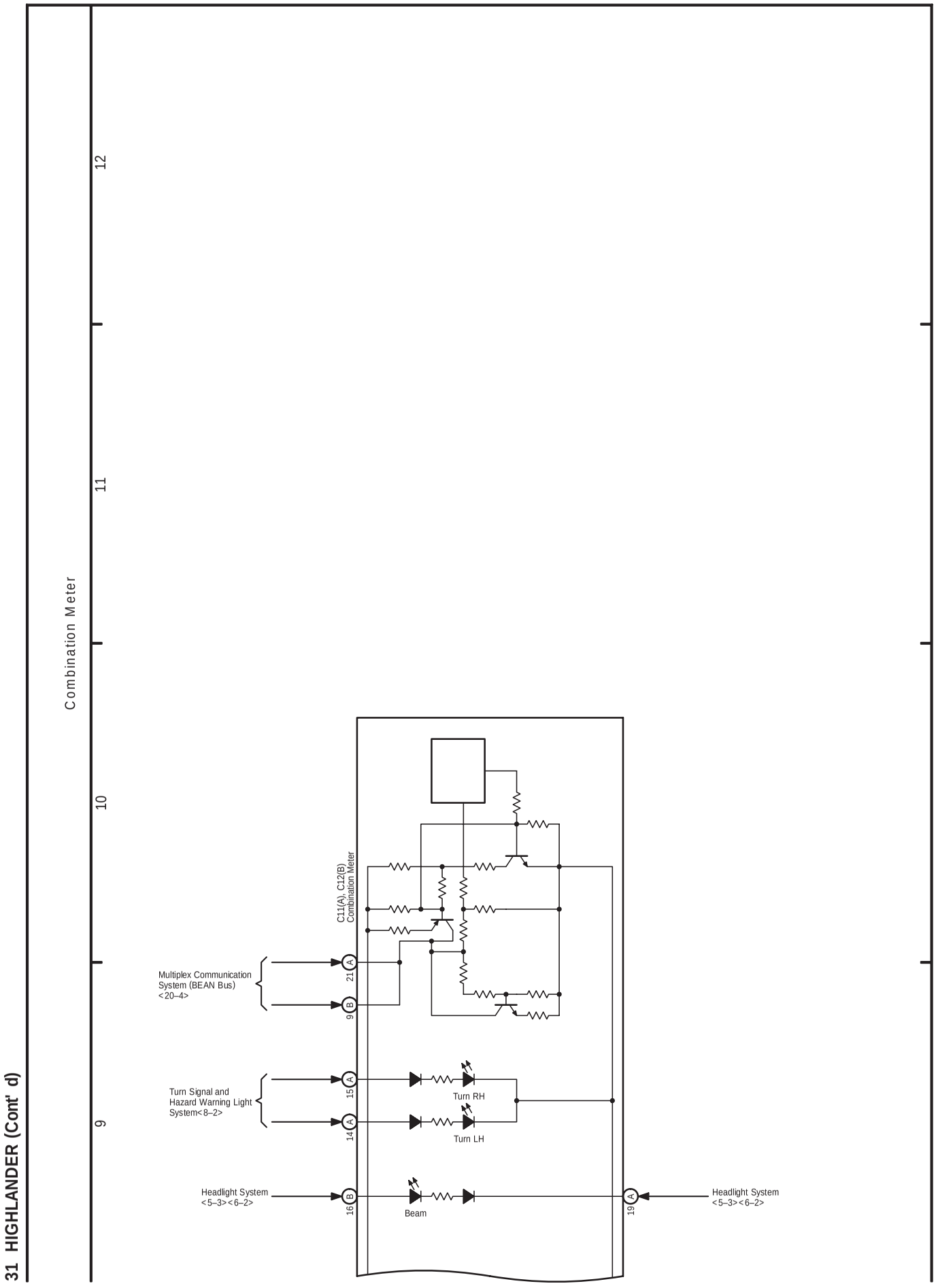
31 HIGHLANDER (Cont' d)
12
11
10
9
Combination Meter
C11(A), C12(B)
Combination Meter
Multiplex Communication
System (BEAN Bus)
<20–4>
21 (A)
9 (B)
Turn Signal and
Hazard Warning Light
System<8–2>
15 (A)
14 (A)
Turn RH
Turn LH
Headlight System
<5–3><6–2>
16 (B)
Beam
19 (A)
Headlight System
<5–3><6–2>

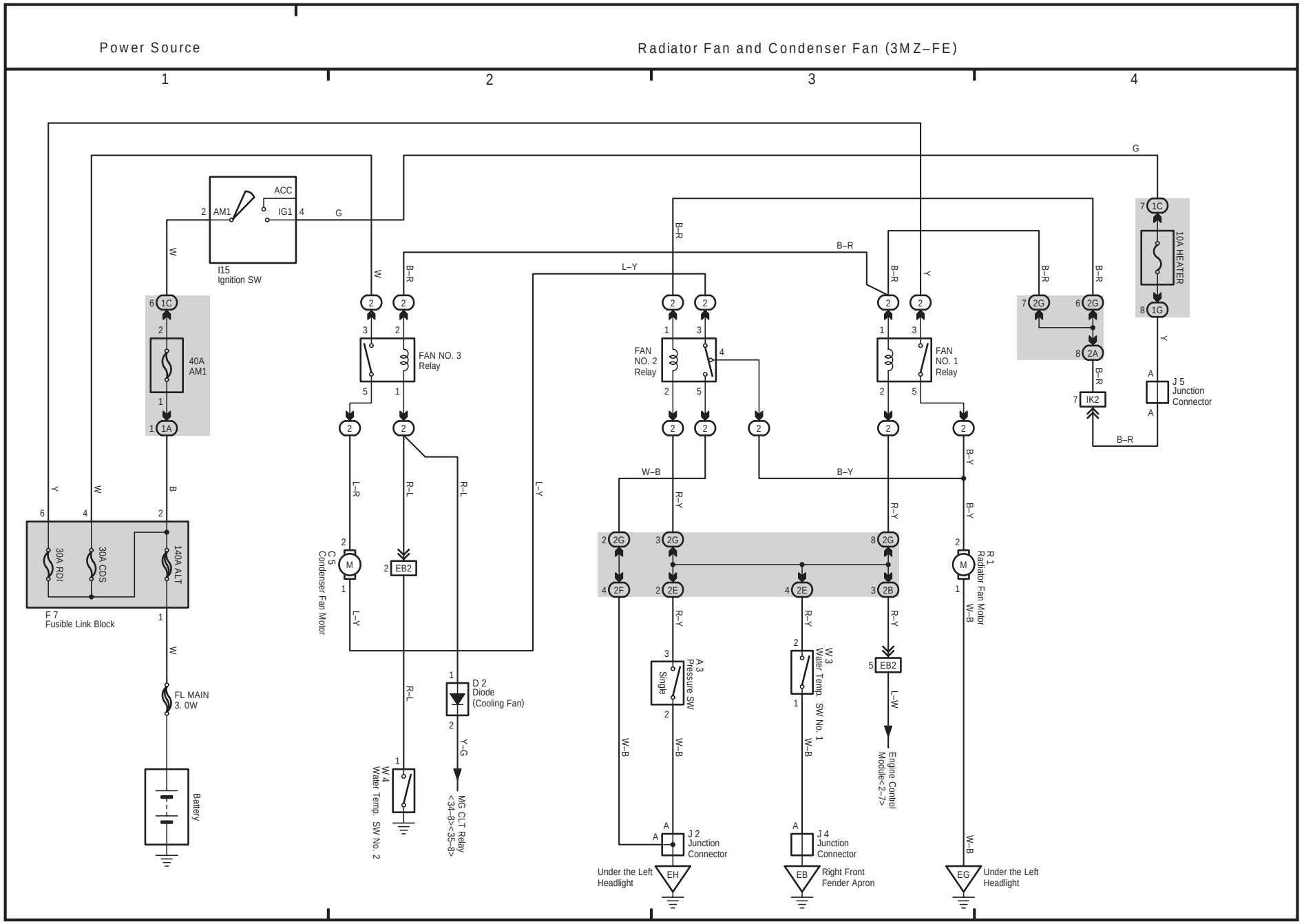
Power Source
Radiator Fan and Condenser Fan (3MZ–FE)
1
2
3
4
ACC
AM1
IG1
I15
Ignition SW
40A
AM1
FAN NO. 3
Relay
FAN
NO. 2
Relay
FAN
NO. 1
Relay
10A HEATER
J 5
Junction
Connector
30A RDI
30A CDS
140A ALT
F 7
Fusible Link Block
FL MAIN
3. 0W
Battery
C 5
Condenser Fan Motor
D 2
Diode
(Cooling Fan)
W 4
Water Temp. SW No. 2
MG CLT Relay
<34–8><35–8>
A 3
Pressure SW
Single
W 3
Water Temp. SW No. 1
Engine Control
Module<2–7>
R 1
Radiator Fan Motor
J 2
Junction
Connector
J 4
Junction
Connector
Under the Left
Headlight
Right Front
Fender Apron
Under the Left
Headlight

33 HIGHLANDER

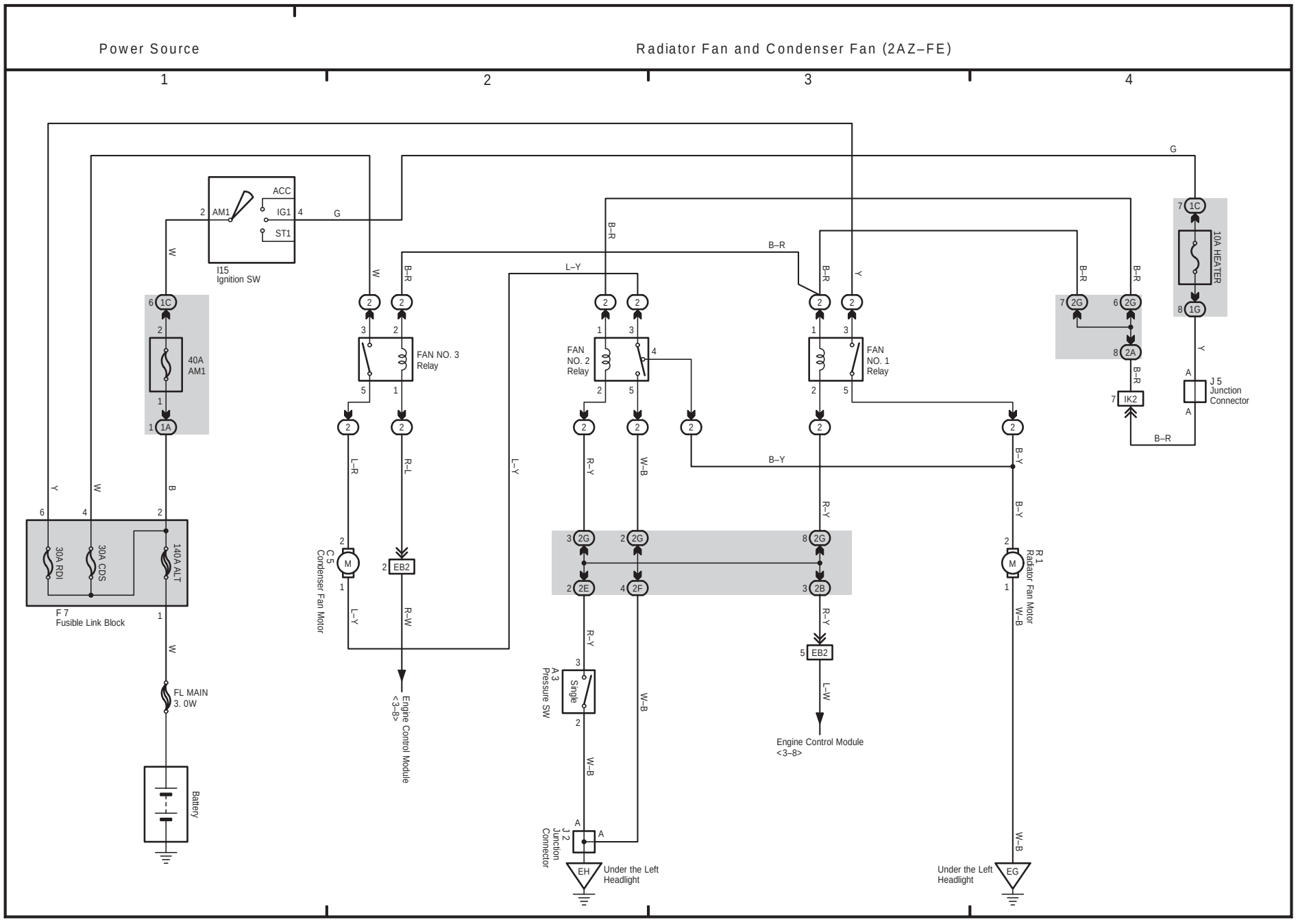

(Cont. next page)

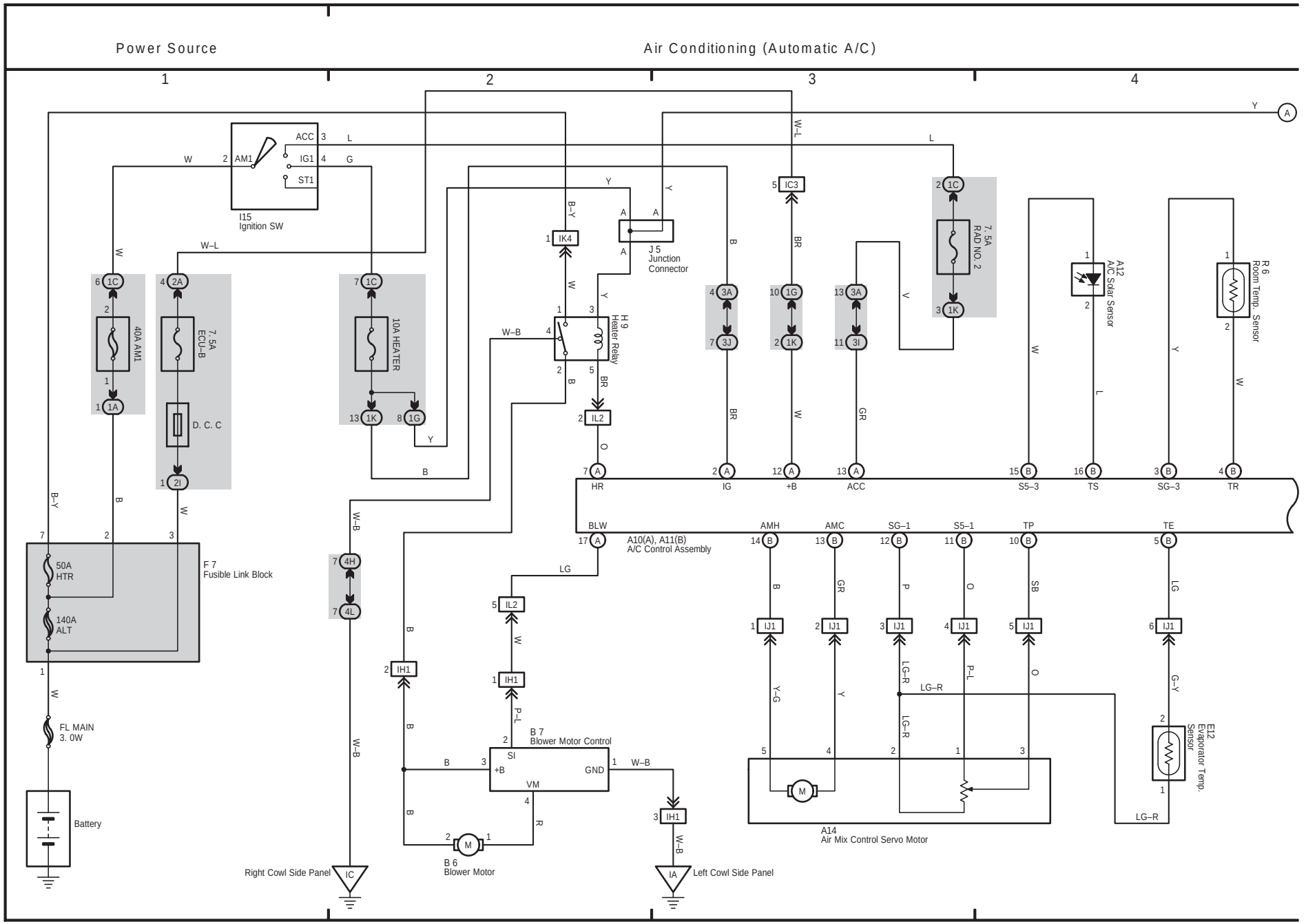

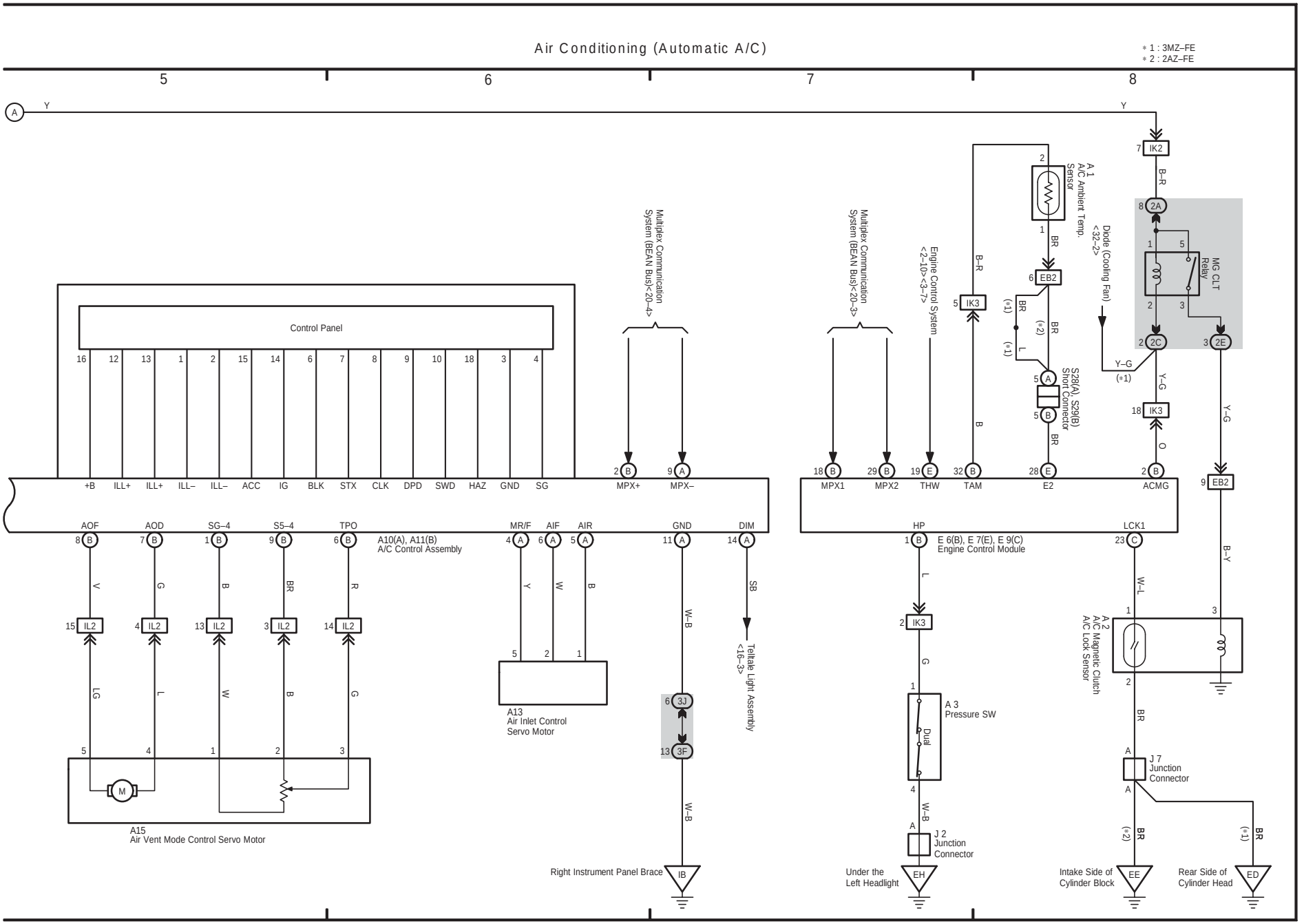
Air Conditioning (Automatic A/C)
* 1 : 3MZ–FE
* 2 : 2AZ–FE
5
6
7
8
Control Panel
+B
ILL+
ILL+
ILL–
ILL–
ACC
IG
BLK
STX
CLK
DPD
SWD
HAZ
GND
SG
MPX+
MPX–
Multiplex Communication System (BEAN Bus)<20-4>
Multiplex Communication System (BEAN Bus)<20-3>
Engine Control System <2-10><3-7>
A 1 A/C Ambient Temp. Sensor
Diode (Cooling Fan) <32-2>
MG CLT Relay
S28(A), S29(B) Short Connector
MPX1
MPX2
THW
TAM
E2
ACMG
HP
LCK1
E 6(B), E 7(E), E 9(C) Engine Control Module
A10(A), A11(B) A/C Control Assembly
AOF
AOD
SG–4
S5–4
TPO
MR/F
AIF
AIR
GND
DIM
A13 Air Inlet Control Servo Motor
A15 Air Vent Mode Control Servo Motor
Telltale Light Assembly <16-3>
A 3 Pressure SW
A 2 A/C Magnetic Clutch A/C Lock Sensor
J 2 Junction Connector
J 7 Junction Connector
Right Instrument Panel Brace
Under the Left Headlight
Intake Side of Cylinder Block
Rear Side of Cylinder Head

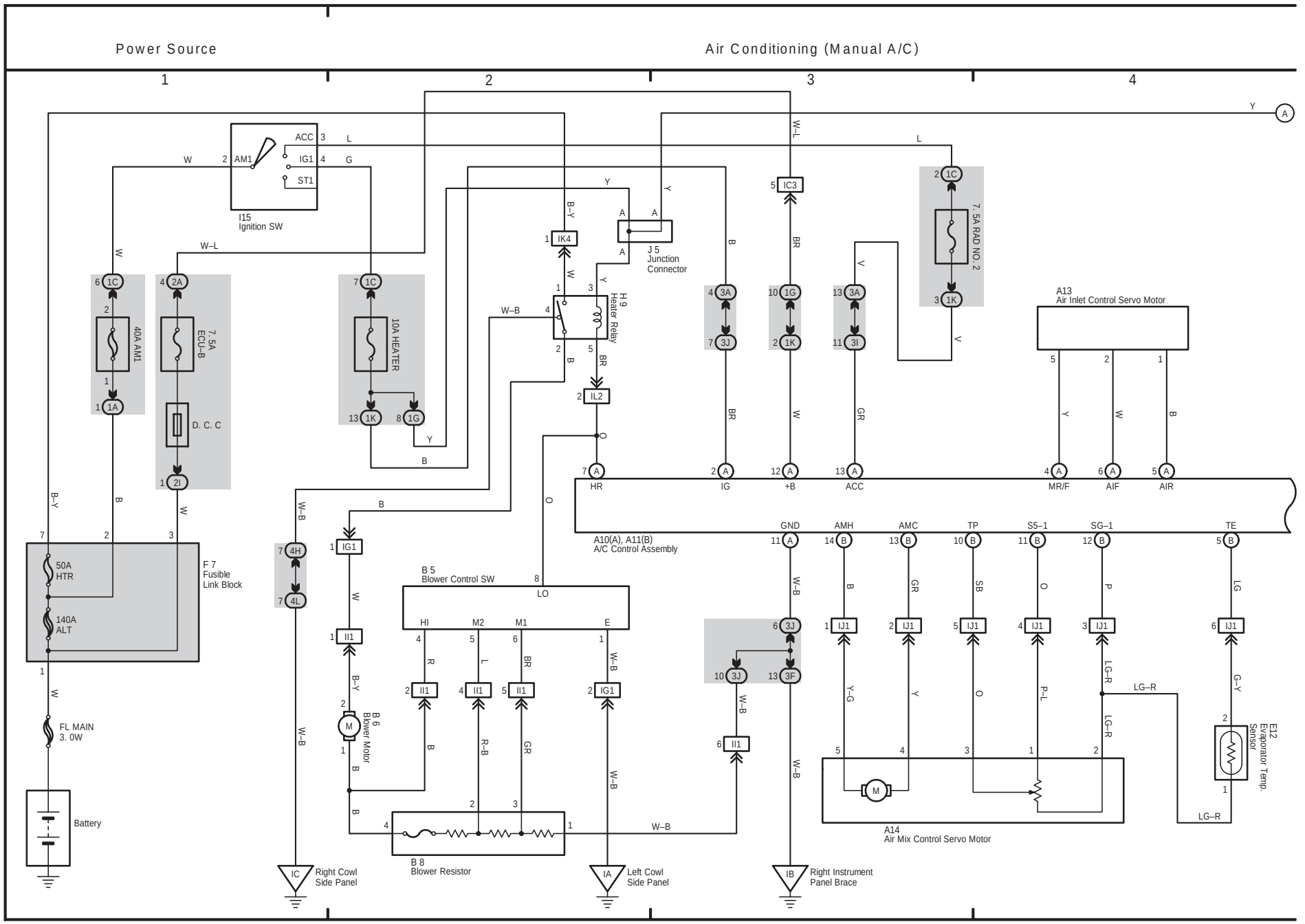
Power Source
Air Conditioning (Manual A/C)
1
2
3
4
I15
Ignition SW
ACC
IG1
ST1
AM1
J 5
Junction
Connector
H 9
Heater Relay
40A AM1
7.5A
ECU–B
10A HEATER
7.5A RAD NO. 2
D. C. C
50A
HTR
140A
ALT
F 7
Fusible
Link Block
FL MAIN
3. 0W
Battery
A13
Air Inlet Control Servo Motor
HR
IG
+B
ACC
MR/F
AIF
AIR
A10(A), A11(B)
A/C Control Assembly
GND
AMH
AMC
TP
S5–1
SG–1
TE
B 5
Blower Control SW
HI
M2
M1
E
LO
B 6
Blower Motor
B 8
Blower Resistor
A14
Air Mix Control Servo Motor
E12
Evaporator Temp.
Sensor
IC
Right Cowl
Side Panel
IA
Left Cowl
Side Panel
IB
Right Instrument
Panel Brace

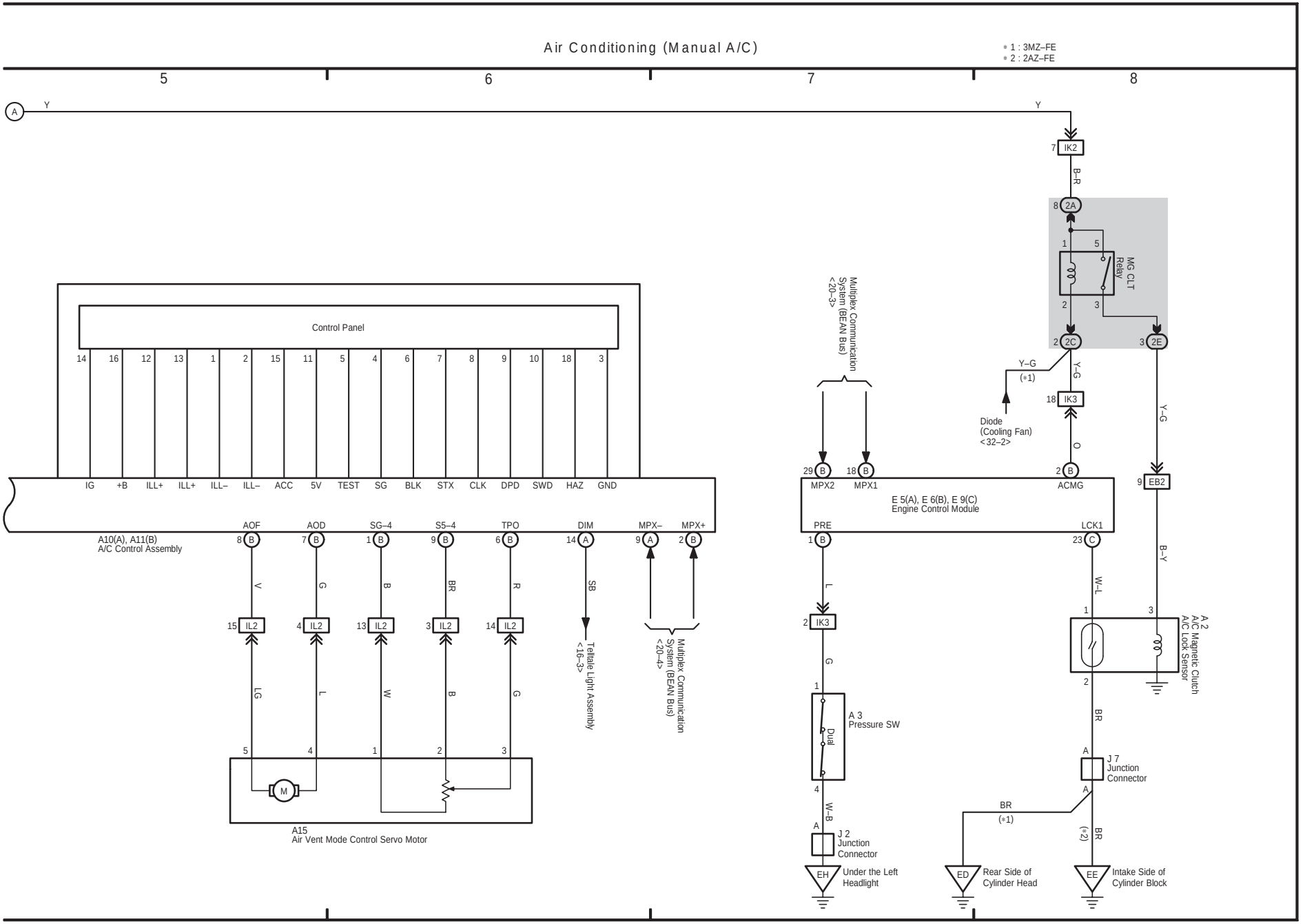
Air Conditioning (Manual A/C)
* 1 : 3MZ–FE
* 2 : 2AZ–FE
5
6
7
8
A
Y
Control Panel
14 16 12 13 1 2 15 11 5 4 6 7 8 9 10 18 3
IG +B ILL+ ILL+ ILL– ILL– ACC 5V TEST SG BLK STX CLK DPD SWD HAZ GND
A10(A), A11(B)
A/C Control Assembly
AOF AOD SG–4 S5–4 TPO DIM MPX– MPX+
V G B BR R SB
15 IL2 4 IL2 13 IL2 3 IL2 14 IL2
LG L W B G
5 4 1 2 3
M
A15
Air Vent Mode Control Servo Motor
Telltale Light Assembly
<16–3>
Multiplex Communication System (BEAN Bus)
<20–4>
Multiplex Communication System (BEAN Bus)
<20–3>
7 IK2
B–R
8 2A
1 5
MG CLT Relay
2 3
2 2C
3 2E
Y–G
(*1)
Y–G
18 IK3
O
Diode
(Cooling Fan)
<32–2>
Y–G
29 B MPX2
18 B MPX1
2 B ACMG
9 EB2
E 5(A), E 6(B), E 9(C)
Engine Control Module
PRE
LCK1
1 B
23 C
L
W–L
B–Y
2 IK3
G
1
A 3
Pressure SW
Dual
4
W–B
A
J 2
Junction
Connector
EH
Under the Left
Headlight
1
3
A 2
A/C Magnetic Clutch
A/C Lock Sensor
2
BR
A
J 7
Junction
Connector
A
BR
(*1)
ED
Rear Side of
Cylinder Head
(*2)
BR
EE
Intake Side of
Cylinder Block

36 HIGHLANDER

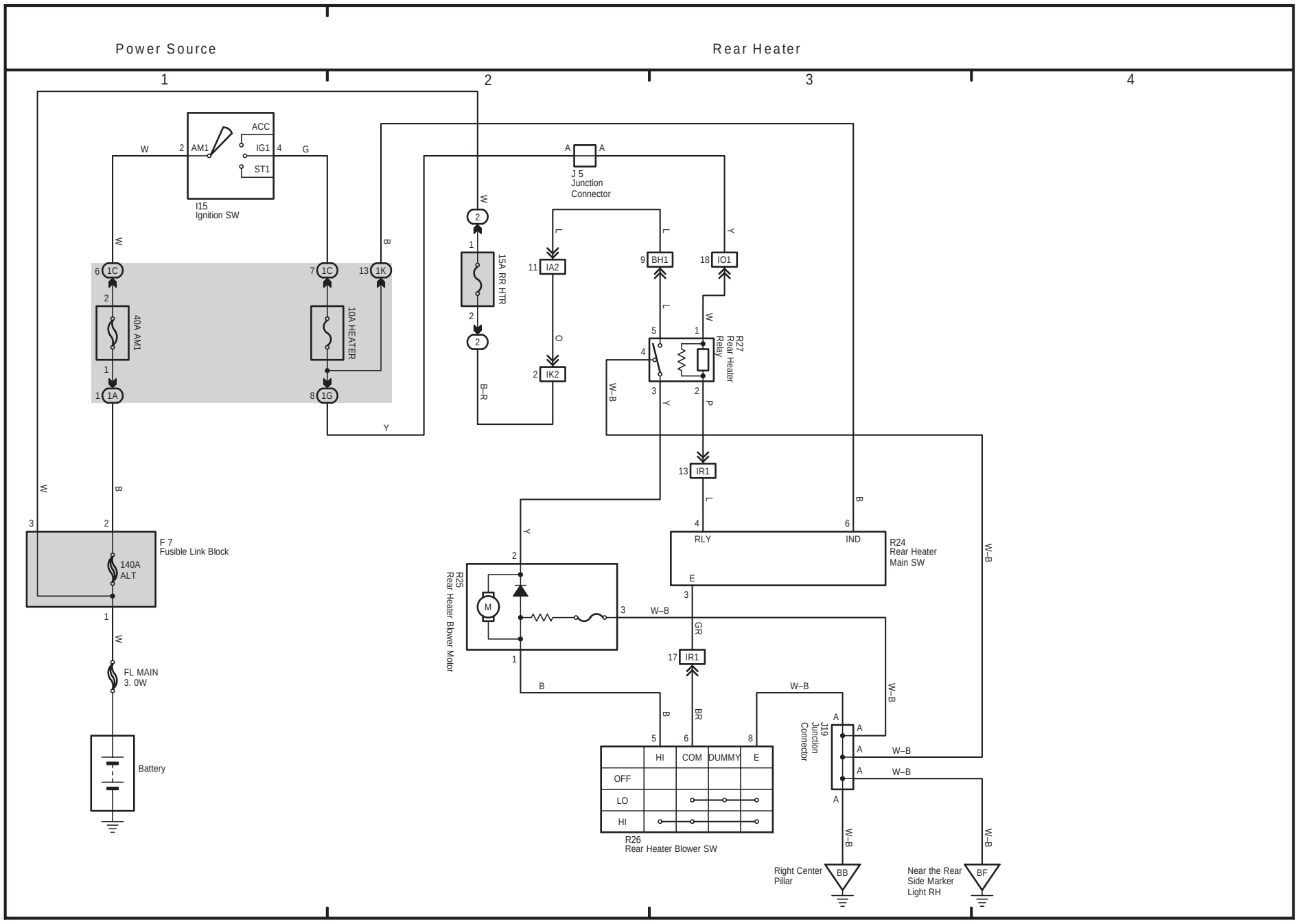

2006 HIGHLANDER ELECTRICAL WIRING DIAGRAM SYSTEM CIRCUITS

	Page
ABS	170
Air Conditioning (Automatic A/C)	278
Air Conditioning (Manual A/C)	284
Audio System (6 Speaker)	262
Audio System (8 Speaker)	254
Automatic Glare–Resistant EC Mirror	246
Automatic Light Control	140
Back–Up Light	128
Charging	66
Cigarette Lighter	226
Combination Meter	264
Cruise Control (2AZ–FE)	164
Cruise Control (3MZ–FE)	158
Door Lock Control	182
Electronically Controlled Transmission and A/T Indicator (2AZ–FE)	104
Electronically Controlled Transmission and A/T Indicator (3MZ–FE)	96
Engine Control (2AZ–FE)	82
Engine Control (3MZ–FE)	70
Engine Immobiliser System	94
Front Deicer	236
Front Fog Light	120
Front Wiper and Washer	204
Garage Door Opener	232
Headlight (w/ Daytime Running Light)	112
Headlight (w/o Daytime Running Light)	116
Horn	224
Ignition	62
Illumination	136
Interior Light	130
Key Reminder	208
Light Auto Turn Off System	142
Mirror Heater	236
Moon Roof	202
Multiplex Communication System (BEAN Bus)	240
Multiplex Communication System (CAN)	244
Navigation System	248
Power Outlet	228
Power Seat (Driver's Seat)	216
Power Seat (Front Passenger's Seat)	220
Power Source	58
Power Window	176
Radiator Fan and Condenser Fan (2AZ–FE)	274
Radiator Fan and Condenser Fan (3MZ–FE)	272
Rear Heater	290
Rear Window Defogger	234
Rear Wiper and Washer	206
Remote Control Mirror	222

	Page
Seat Belt Warning	208
Seat Heater	238
Shift Lock	214
SRS	149
Starting	62
Stop Light	126
Taillight	122
Theft Deterrent System	196
Tire Pressure Warning System	170
TRAC	170
Trailer Towing	146
Turn Signal and Hazard Warning Light	124
VSC	170
Wireless Door Lock Control	188

F RELAY LOCATIONS

[Engine Compartment]

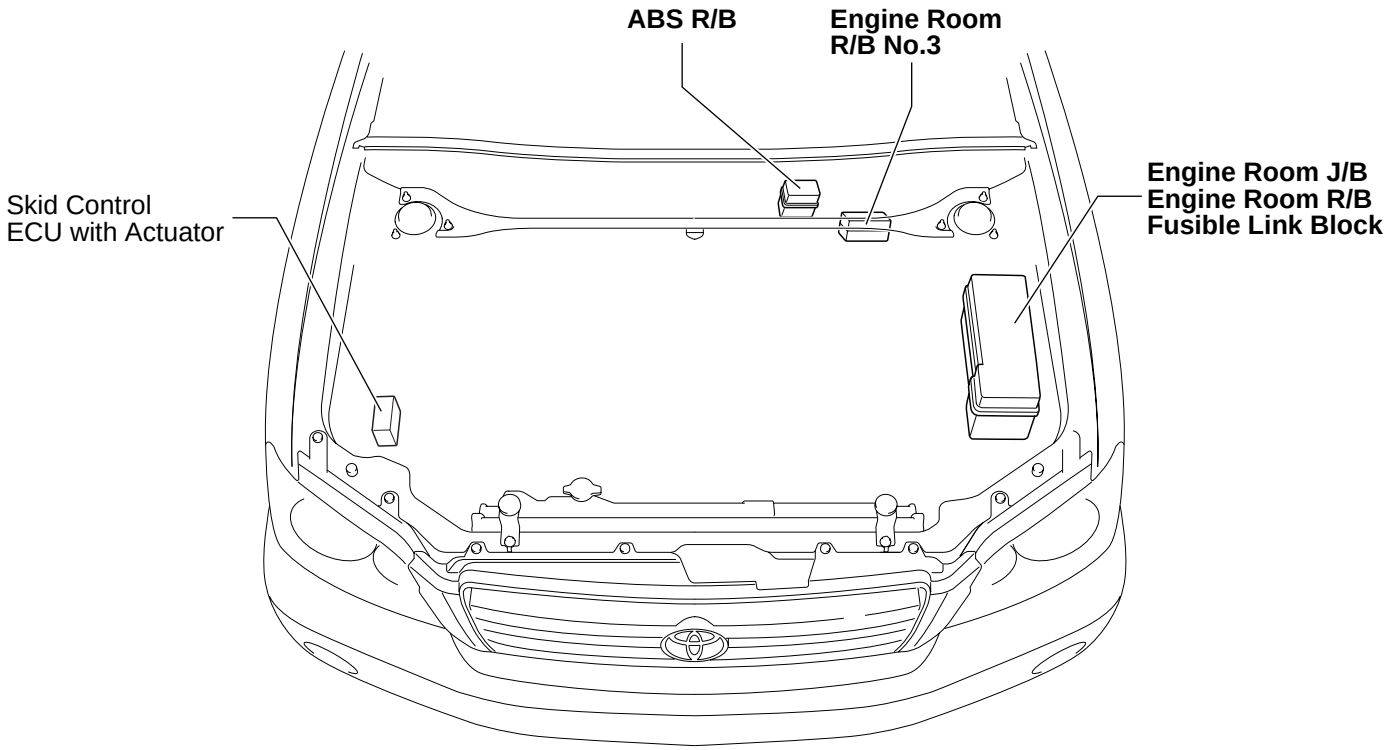

[Instrument Panel]

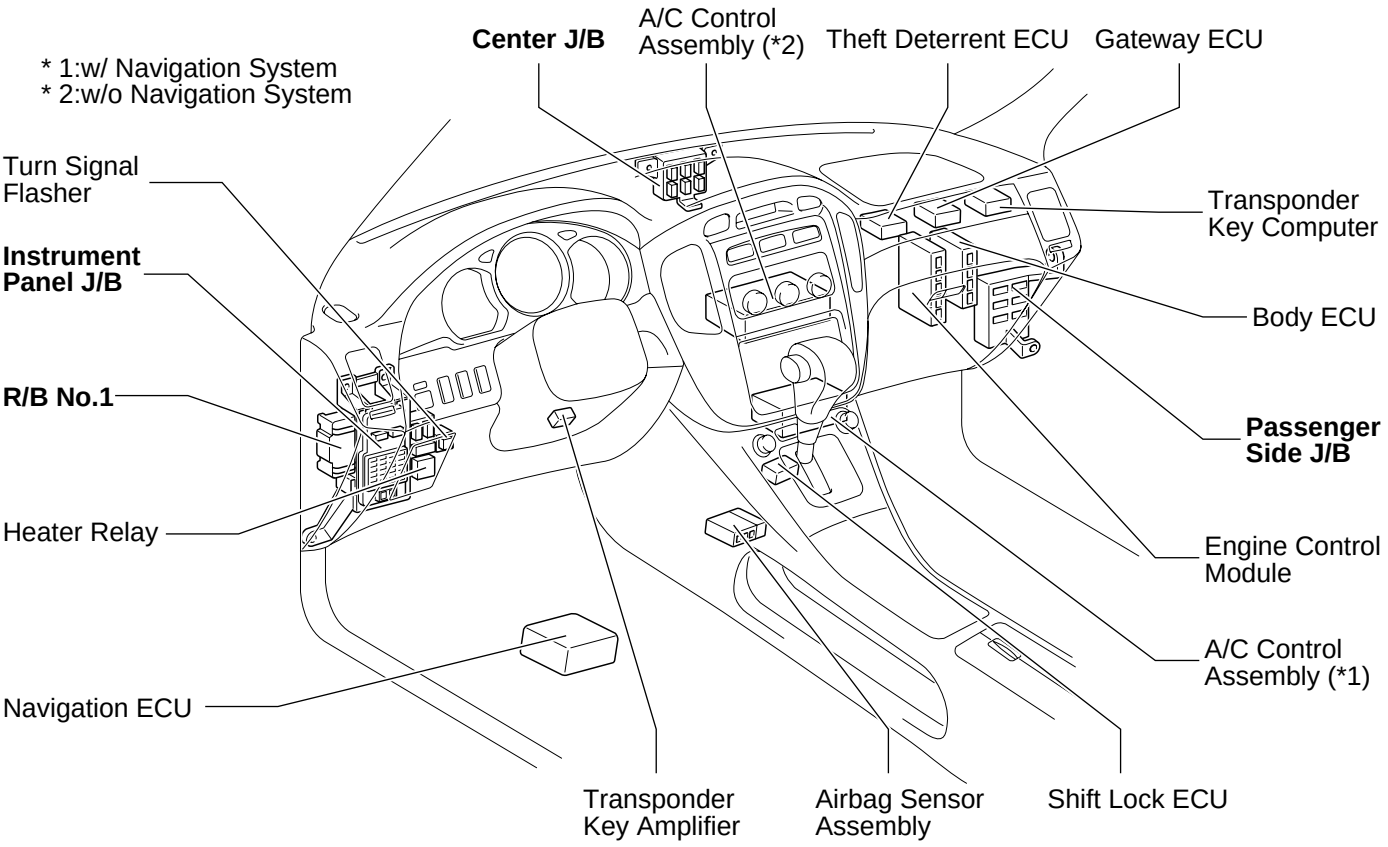

[Body]

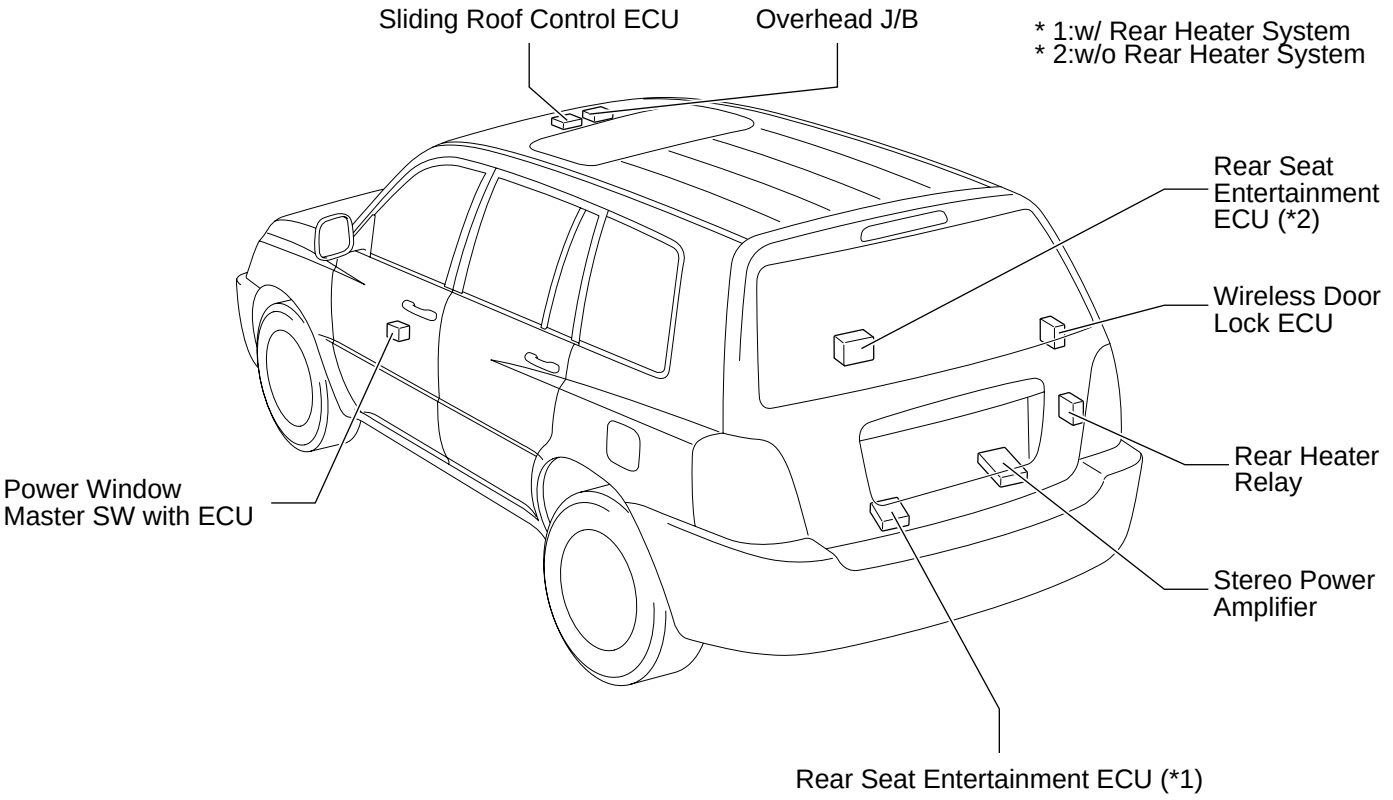
Sliding Roof Control ECU
Overhead J/B
* 1:w/ Rear Heater System
* 2:w/o Rear Heater System
Rear Seat Entertainment ECU (*2)
Wireless Door Lock ECU
Rear Heater Relay
Stereo Power Amplifier
Power Window Master SW with ECU
Rear Seat Entertainment ECU (*1)

[Seat]

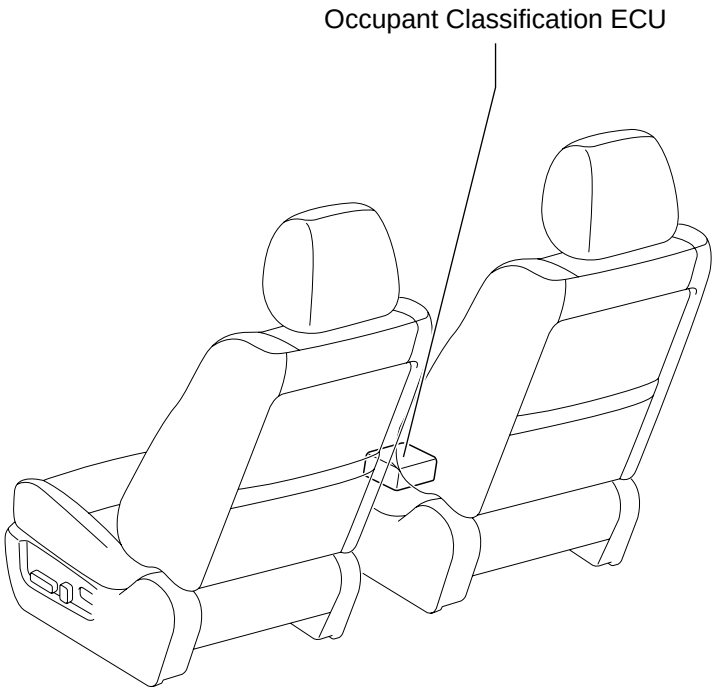
Occupant Classification ECU

F RELAY LOCATIONS

② : Engine Room R/B	Engine Compartment Left [Inside Engine Room J/B] (See Page 20)

* 1:H-LP RH LWR
* 2:ETCS

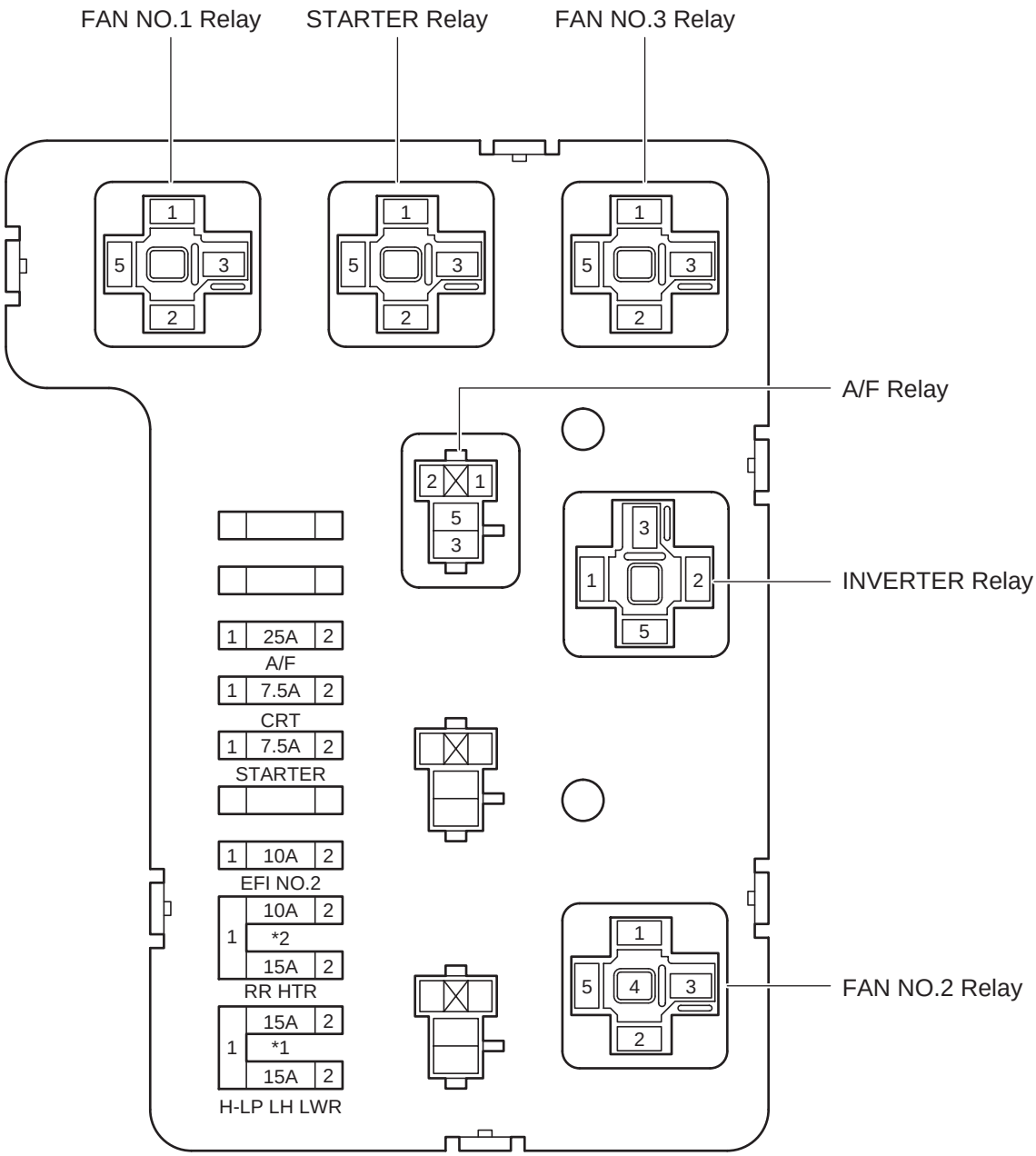

③ : Engine Room R/B No.3	Engine Compartment Rear Left (See Page 20)

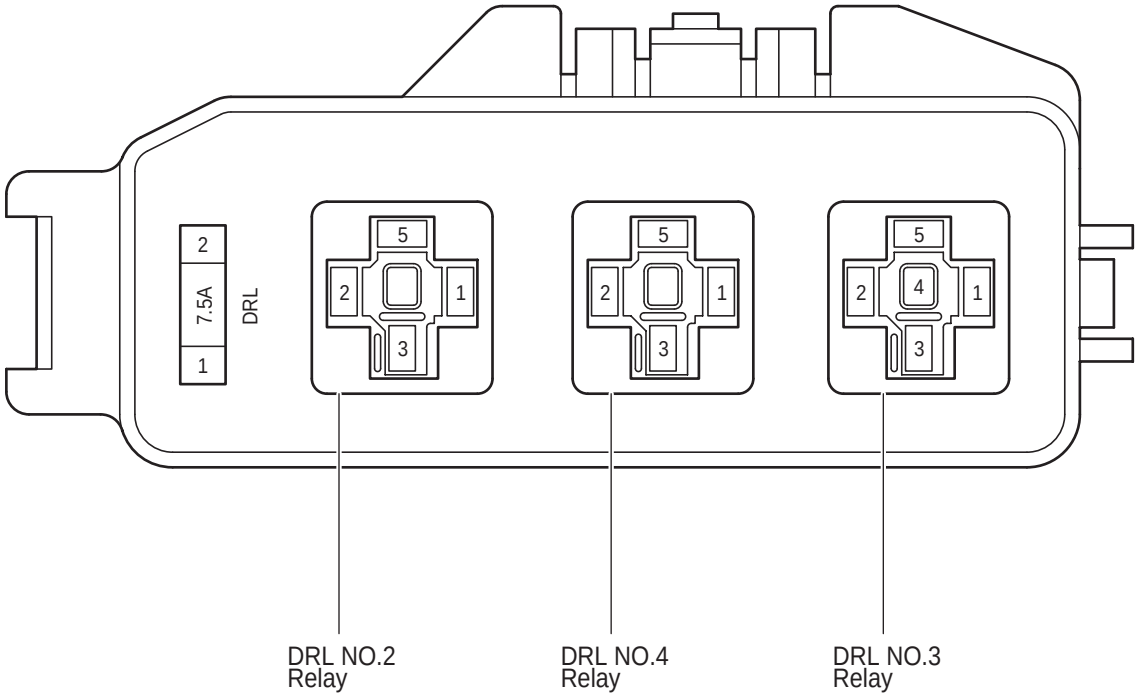

⑤ : ABS R/B	Engine Compartment Rear Left (See Page 20)

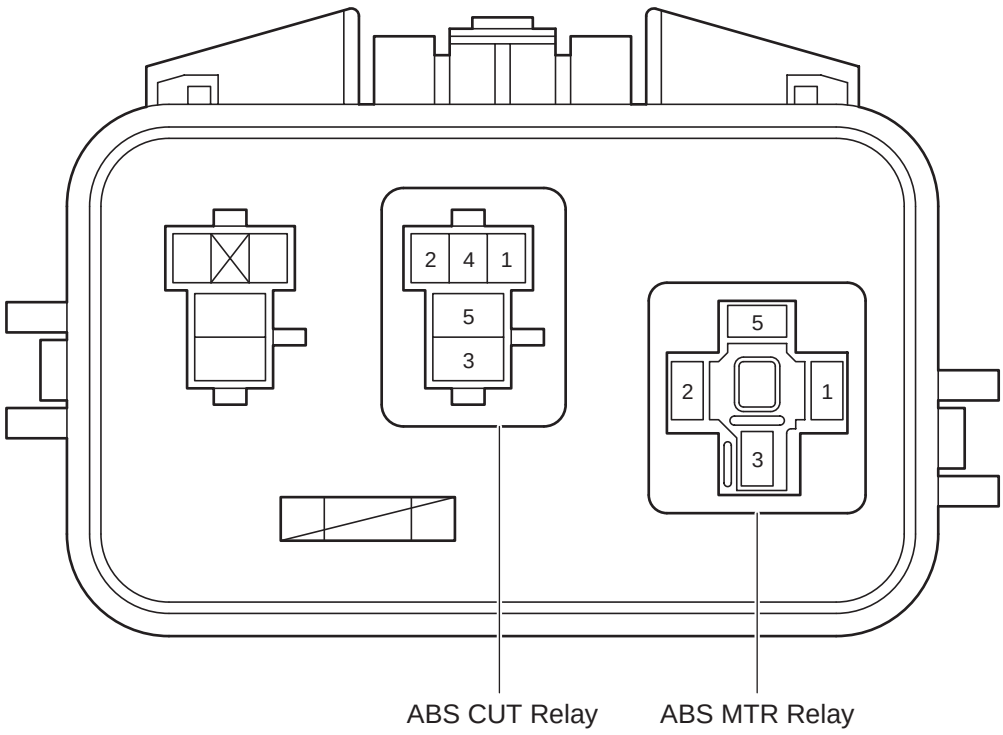

F RELAY LOCATIONS

① : R/B No.1	Lower Finish Panel (See Page 20)

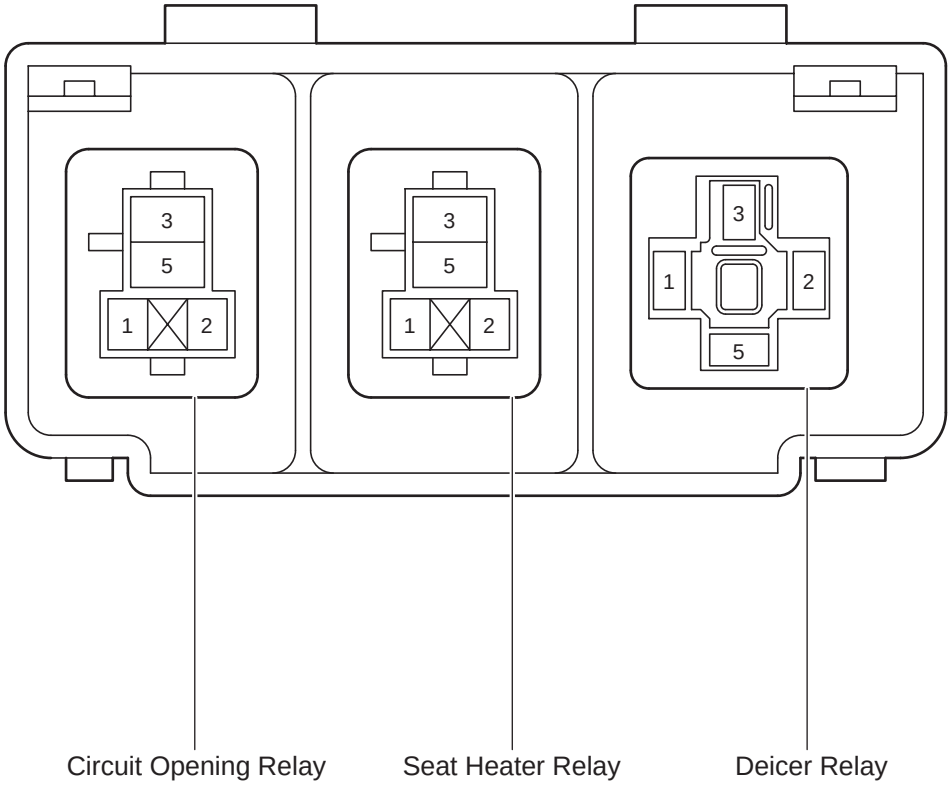

Fusible Link Block	Engine Compartment Left [Inside Engine Room J/B] (See Page 20)

* 1:3MZ-FE

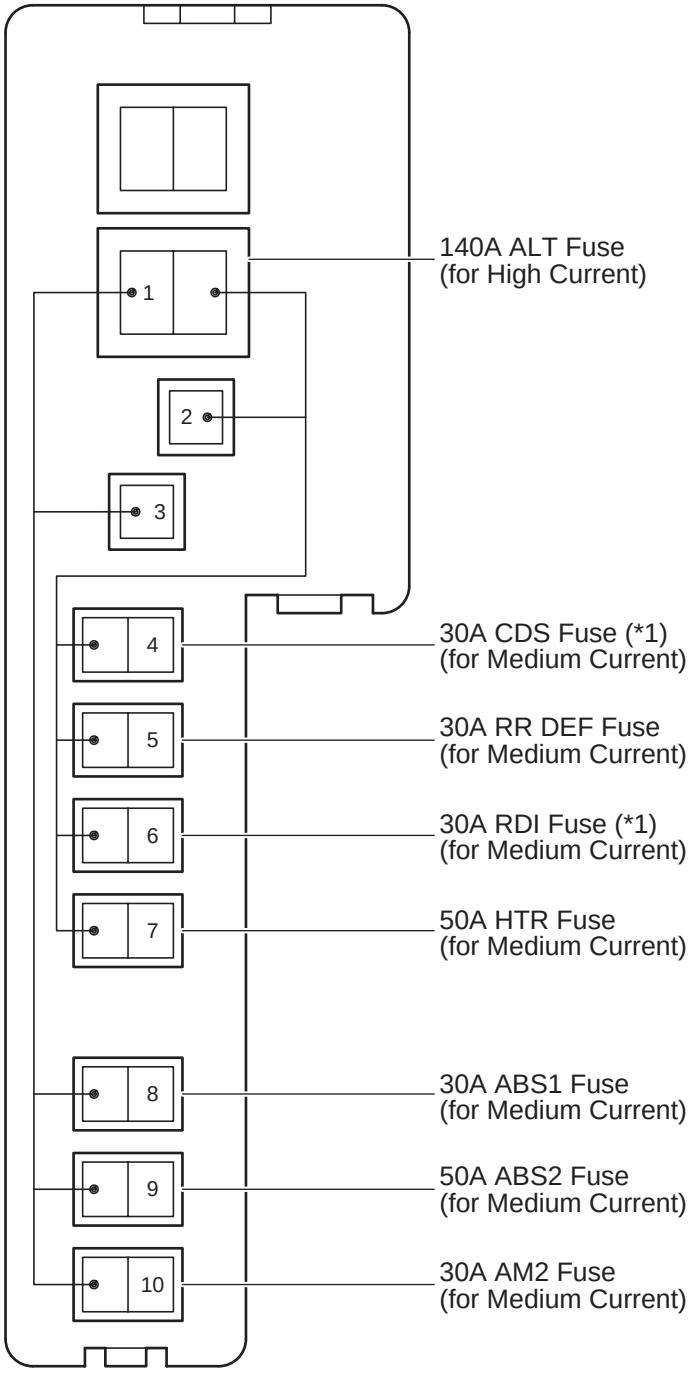

F RELAY LOCATIONS

: Engine Room J/B	Engine Compartment Left (See Page 20)

* 1:H-LP RH UPR
* 2:H-LP LH UPR
* 3:POWER OUTLET2
* 4:SHORT

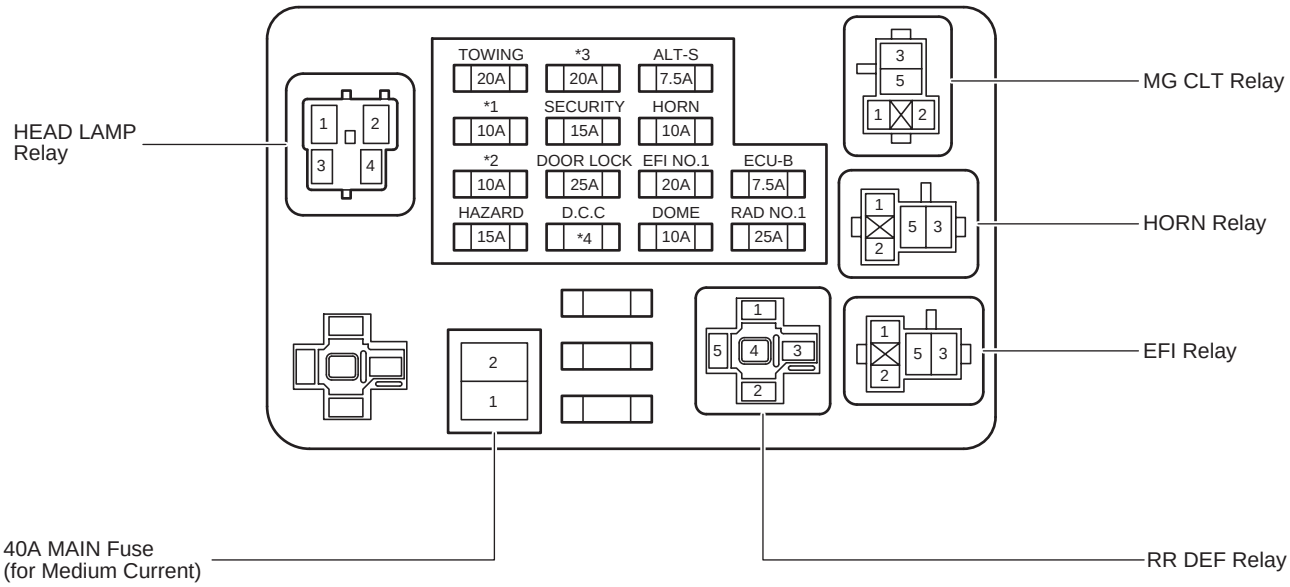

(Inner Circuit : See Page 34)

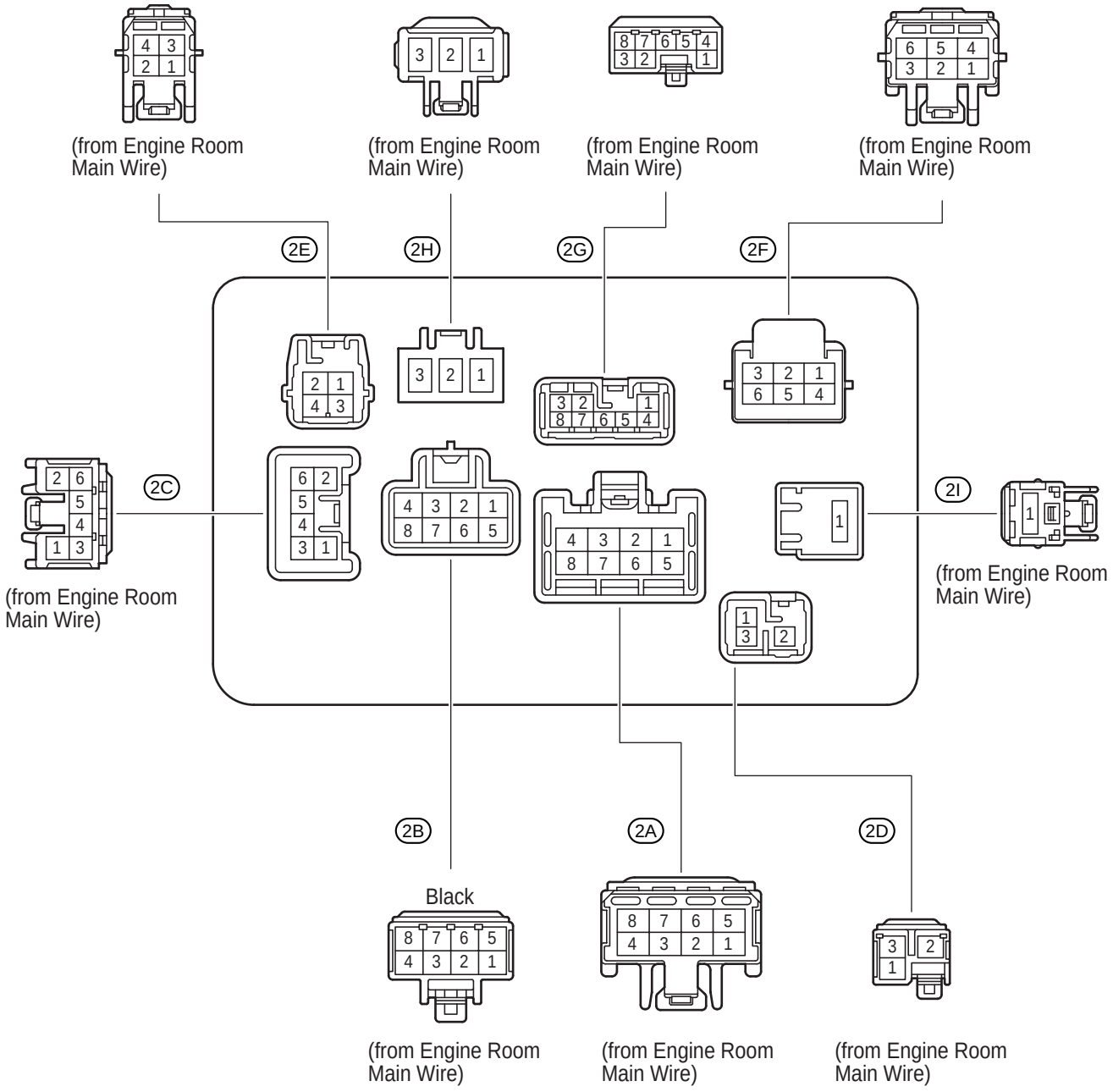

F RELAY LOCATIONS

: Instrument Panel J/B	Lower Finish Panel (See Page 20)

* 1:PWR OUTLET1

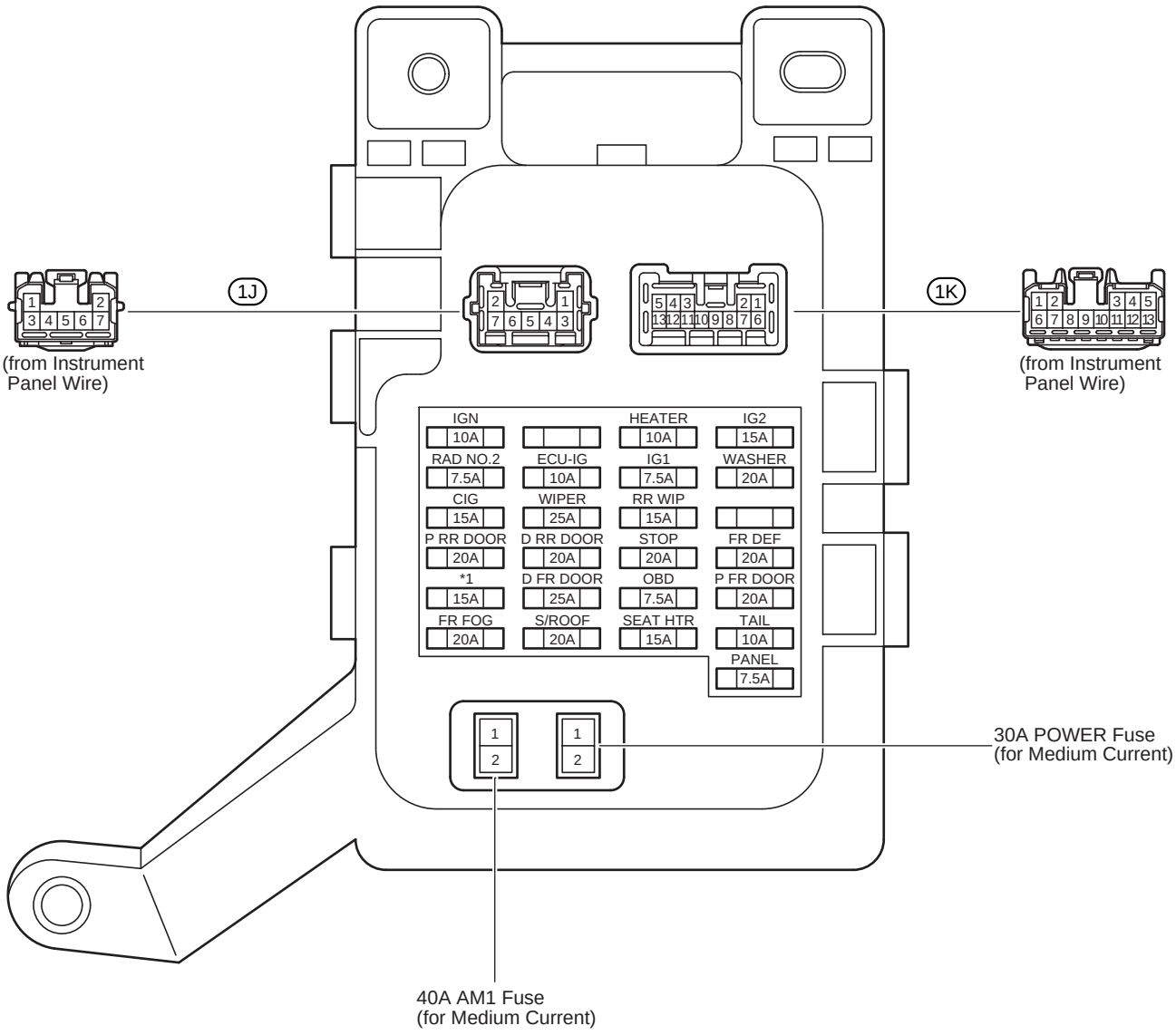

(Inner Circuit : See Page 35)

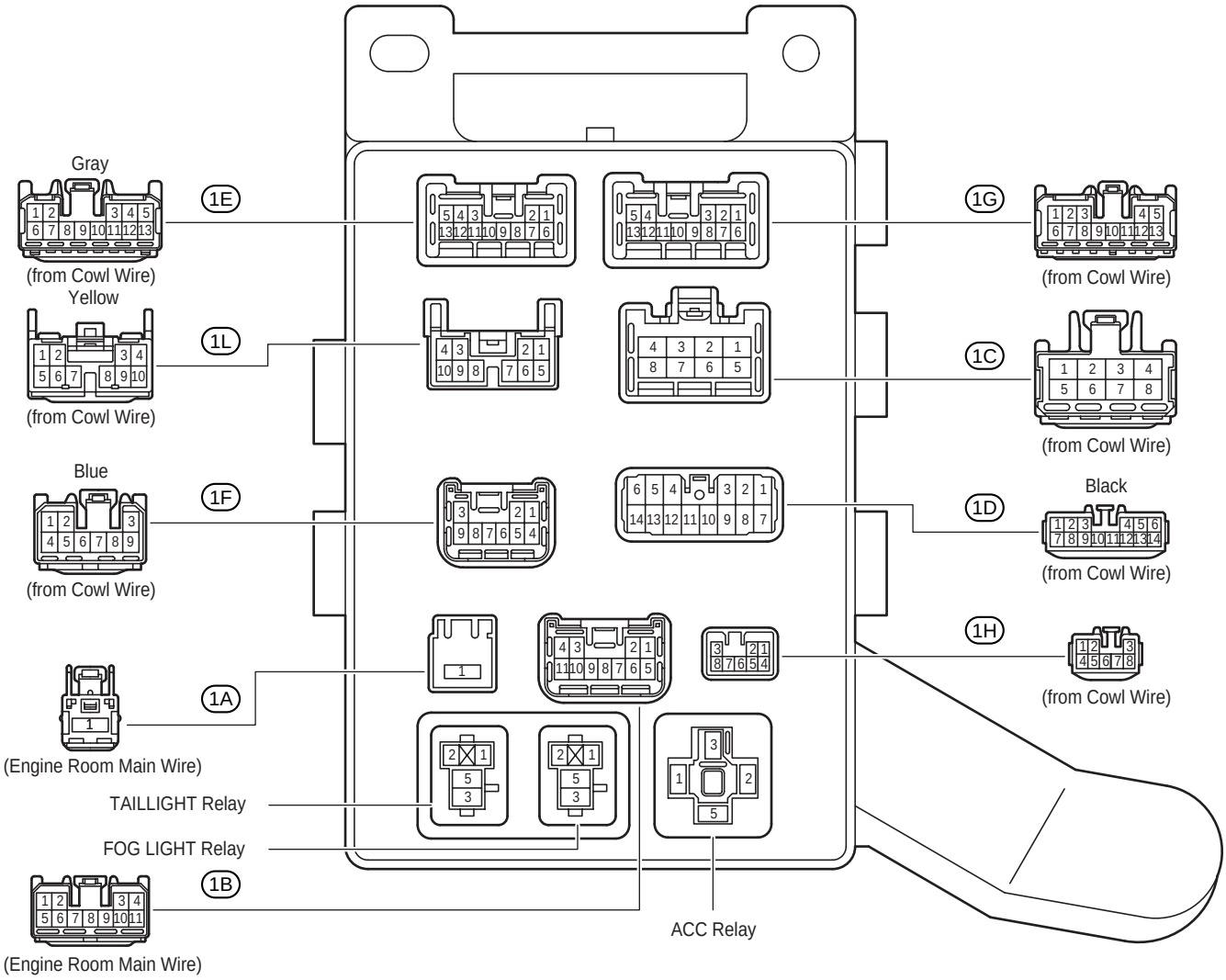

F RELAY LOCATIONS

: Center J/B	Behind the Instrument Panel Center (See Page 20)

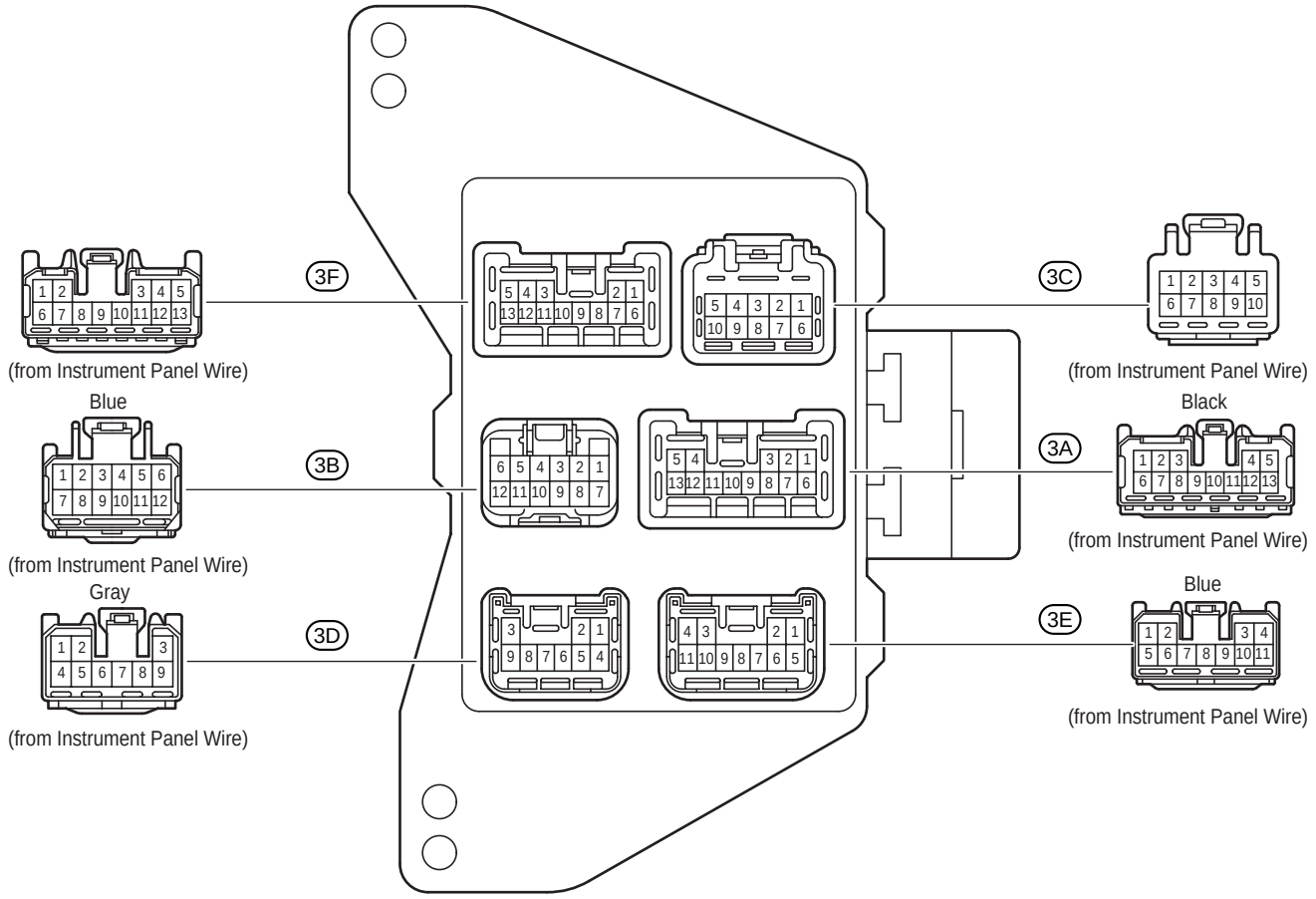

(Inner Circuit : See Page 36)

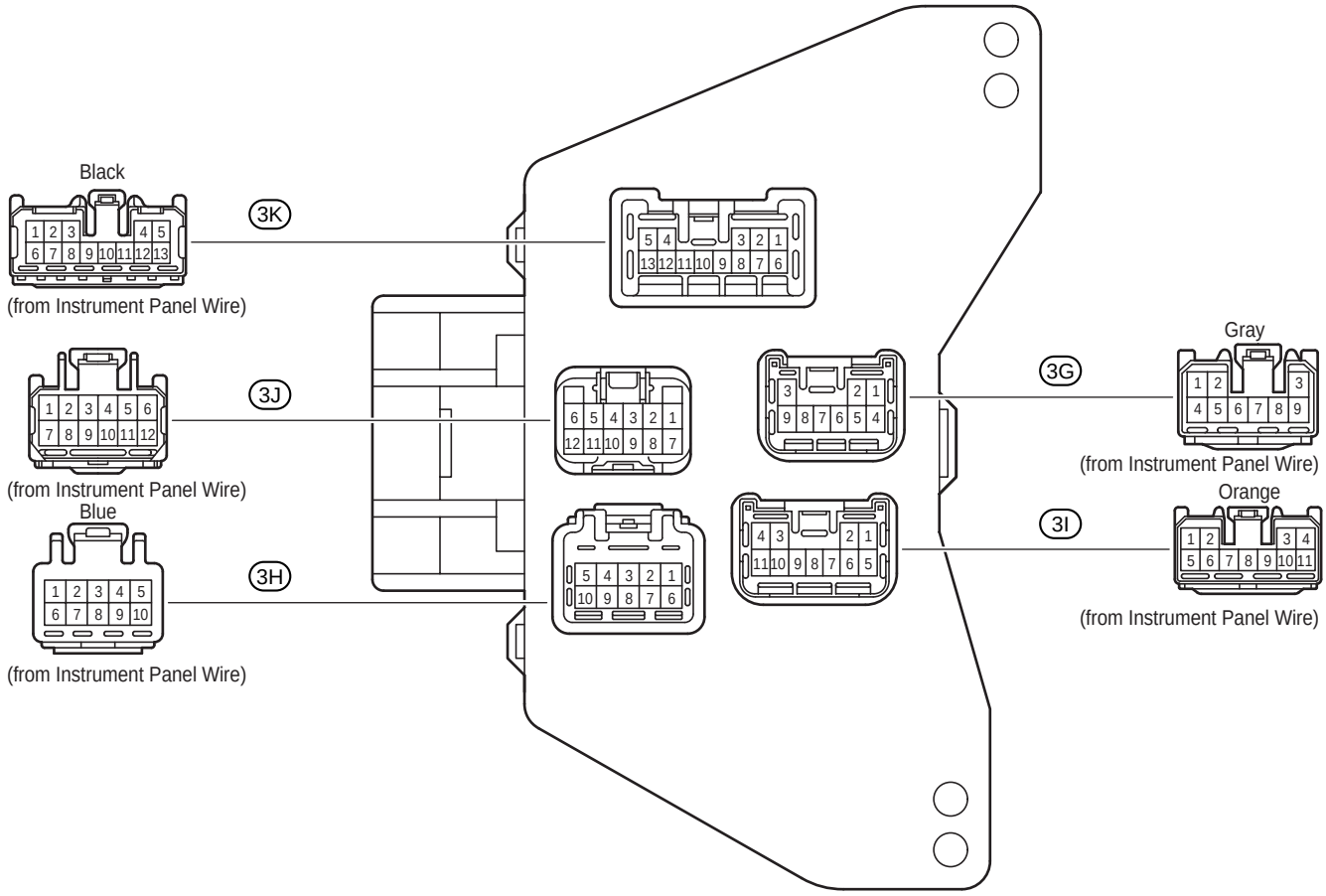

F RELAY LOCATIONS

: Passenger Side J/B	Right Side of Glove Box (See Page 20)

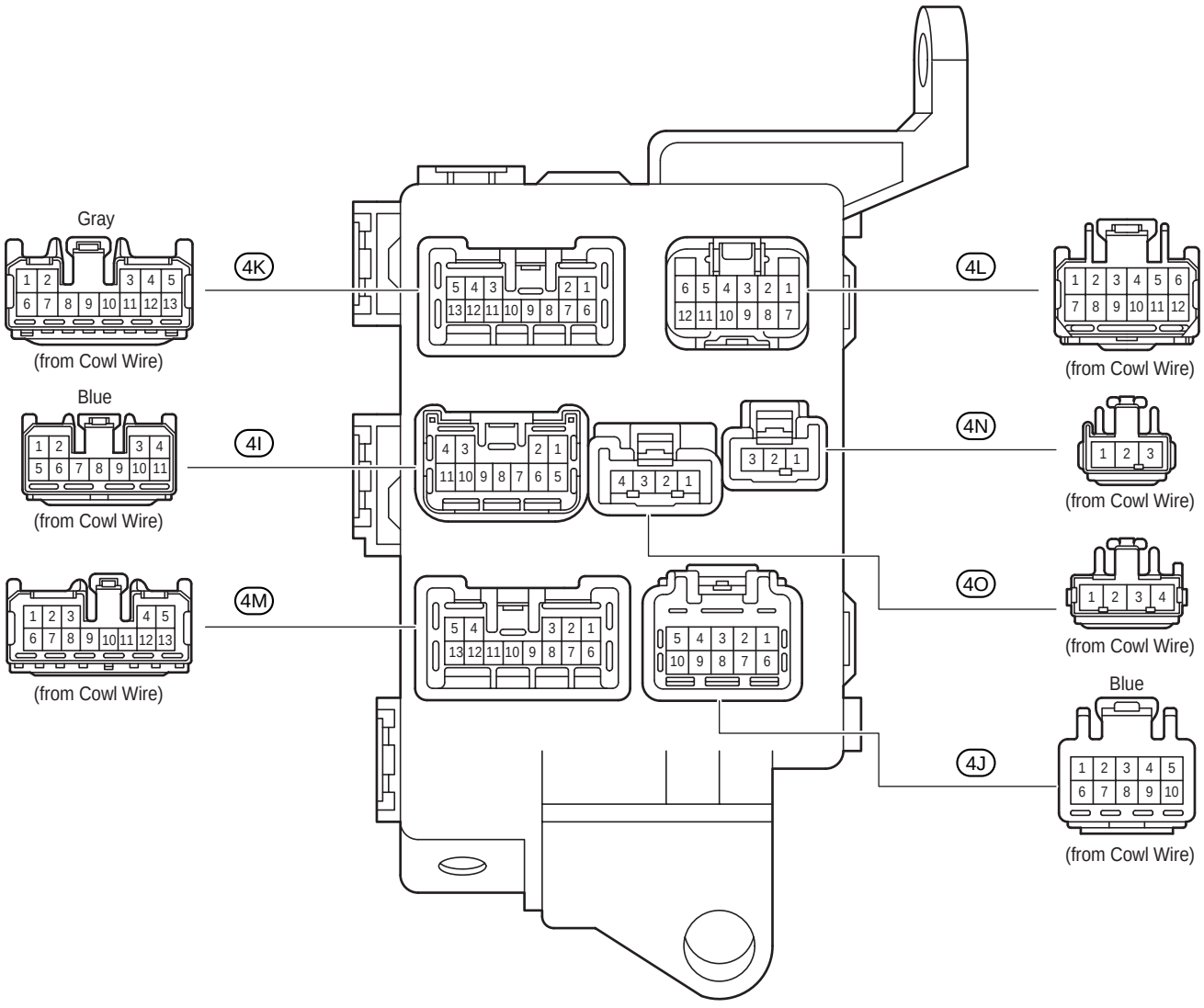

(Inner Circuit : See Page 37)

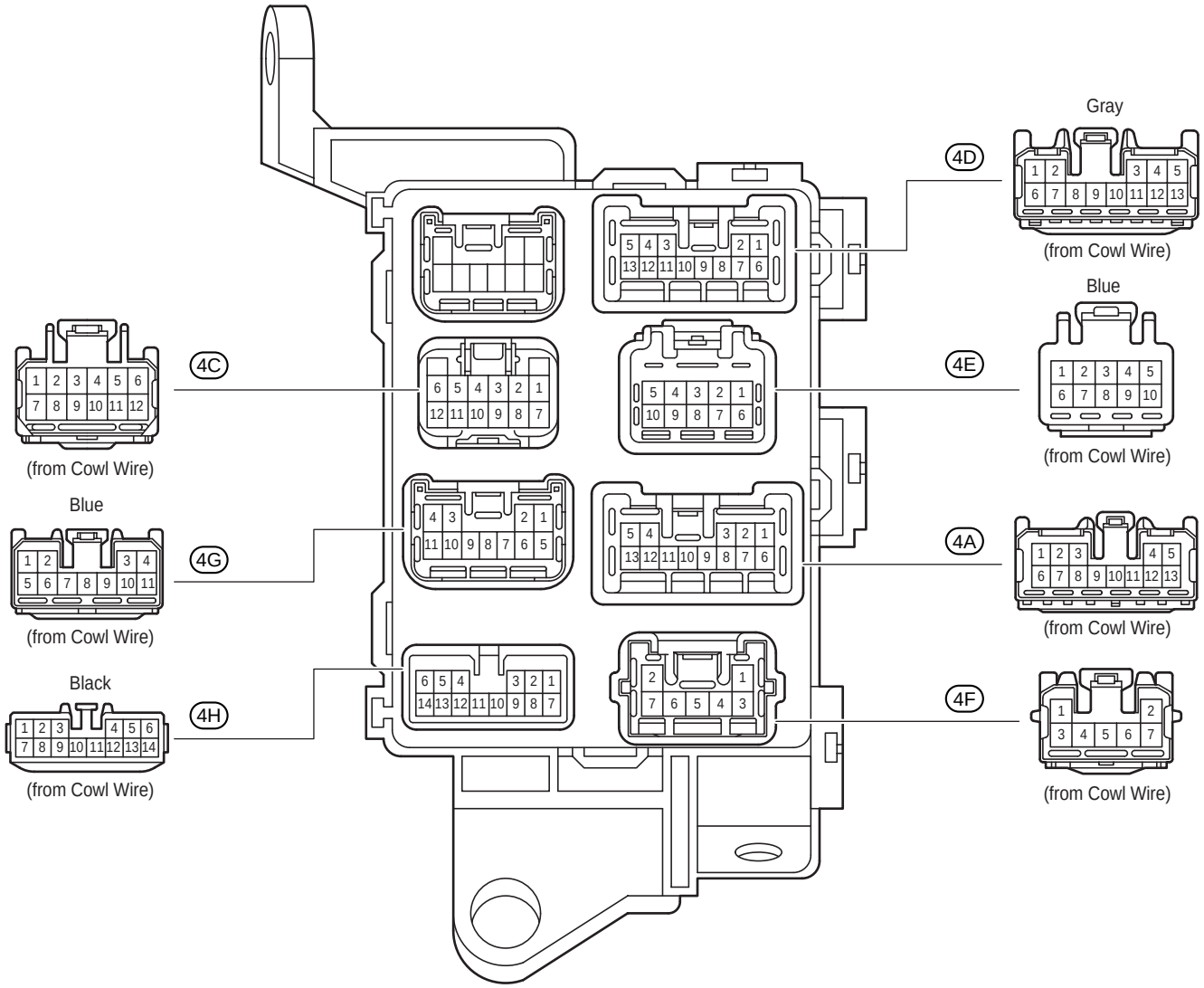

[Engine Room J/B Inner Circuit]

* 1:20A POWER OUTLET2

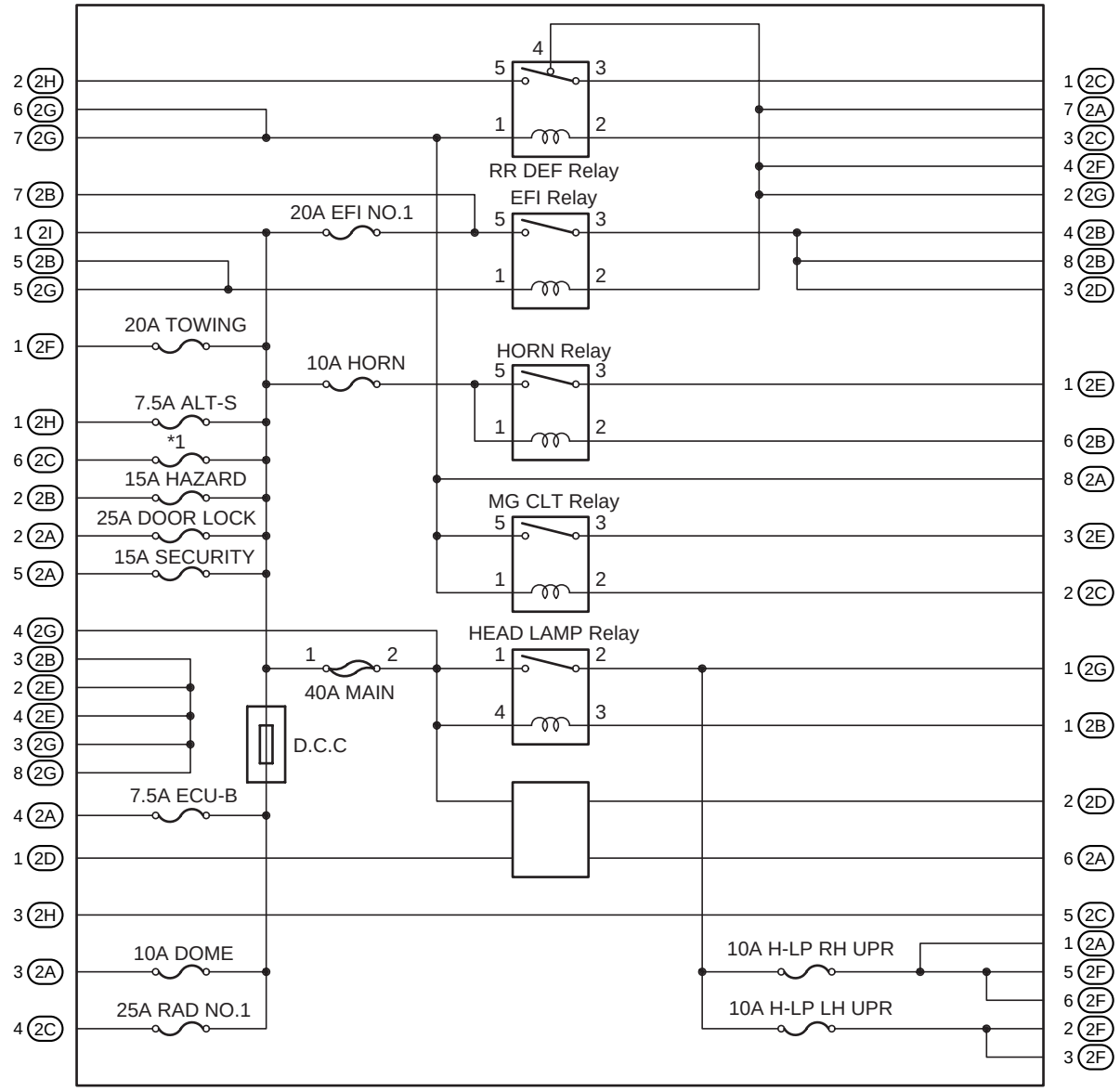

[Instrument Panel J/B Inner Circuit]

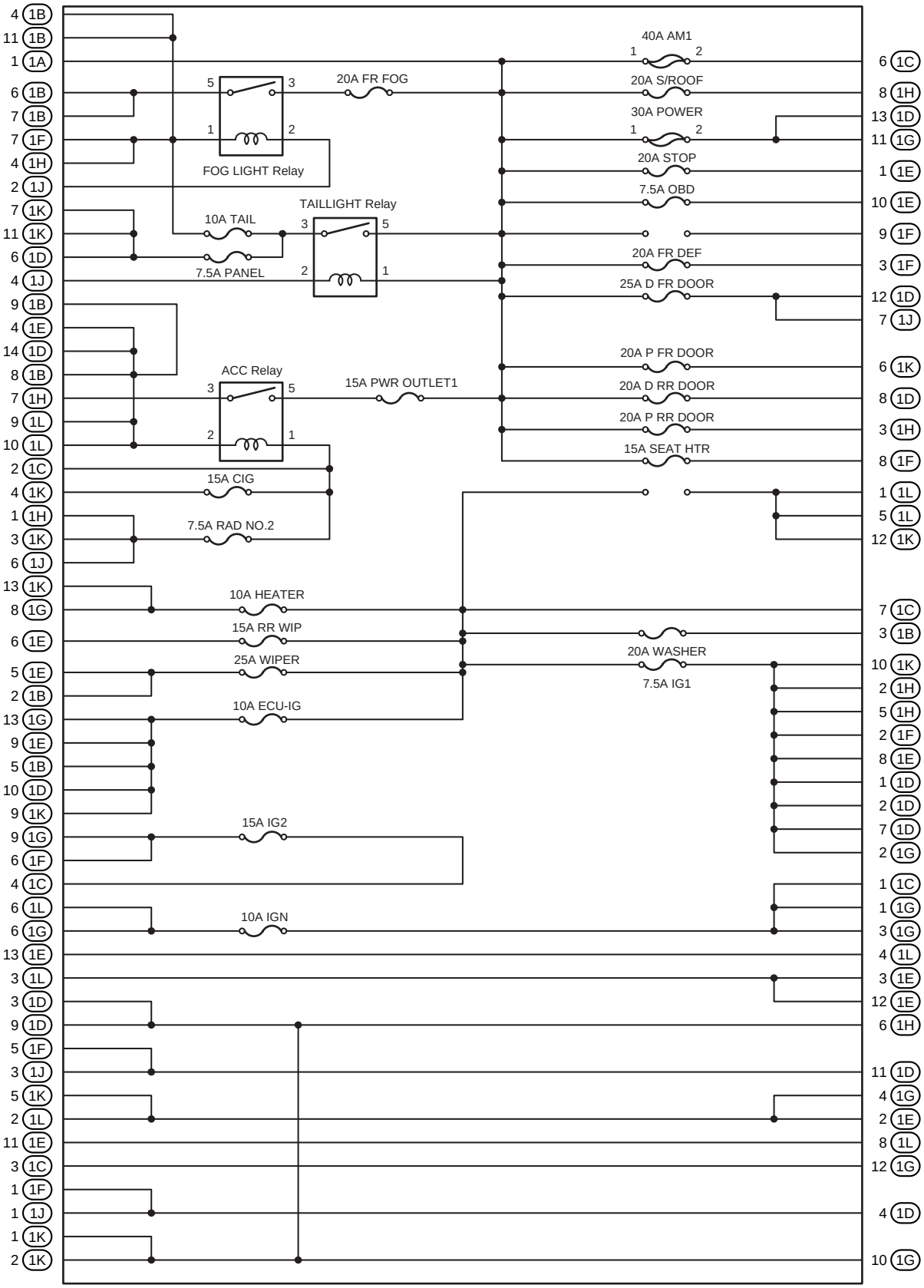

[Center J/B Inner Circuit]

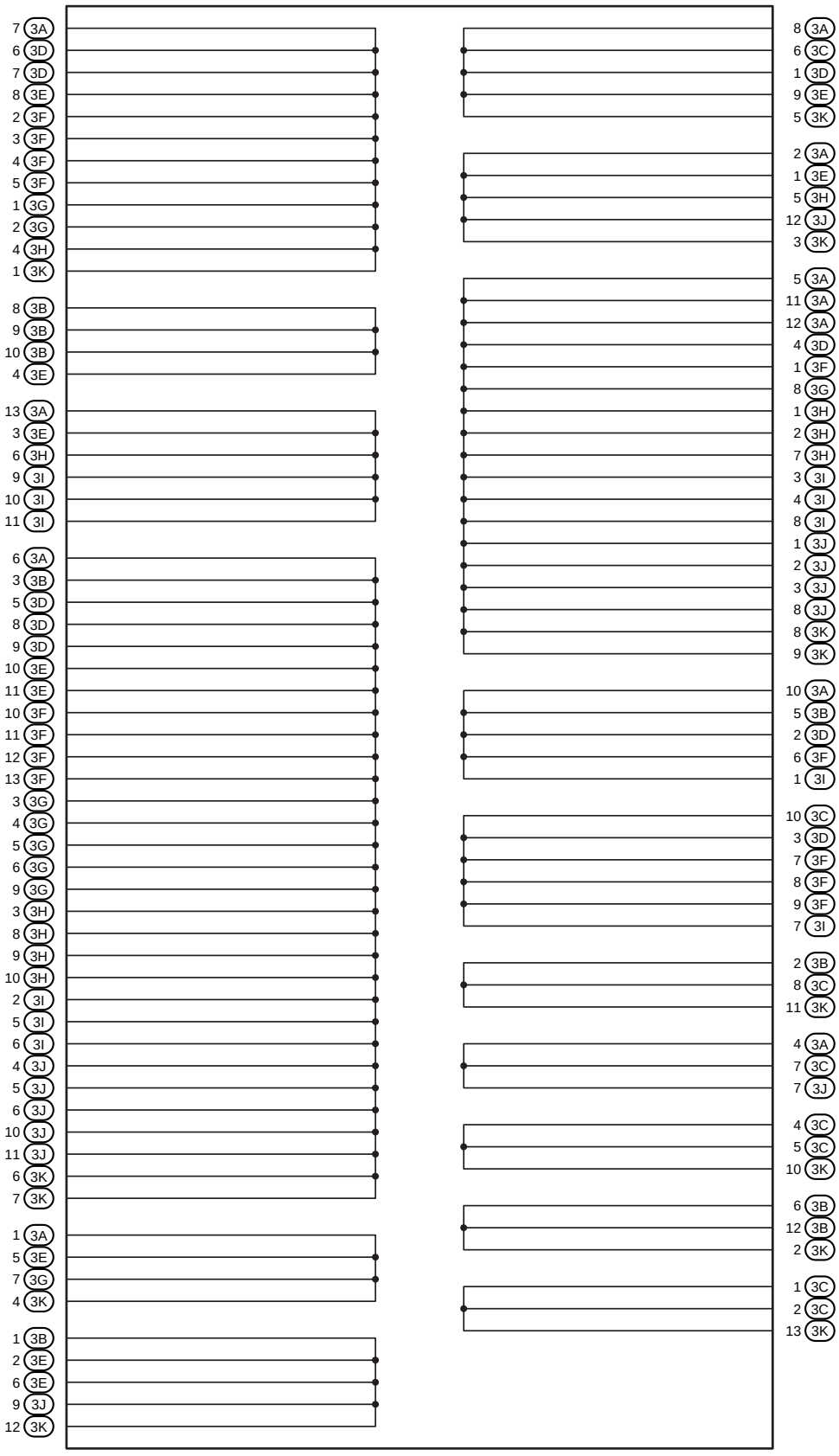

[Passenger Side J/B Inner Circuit]

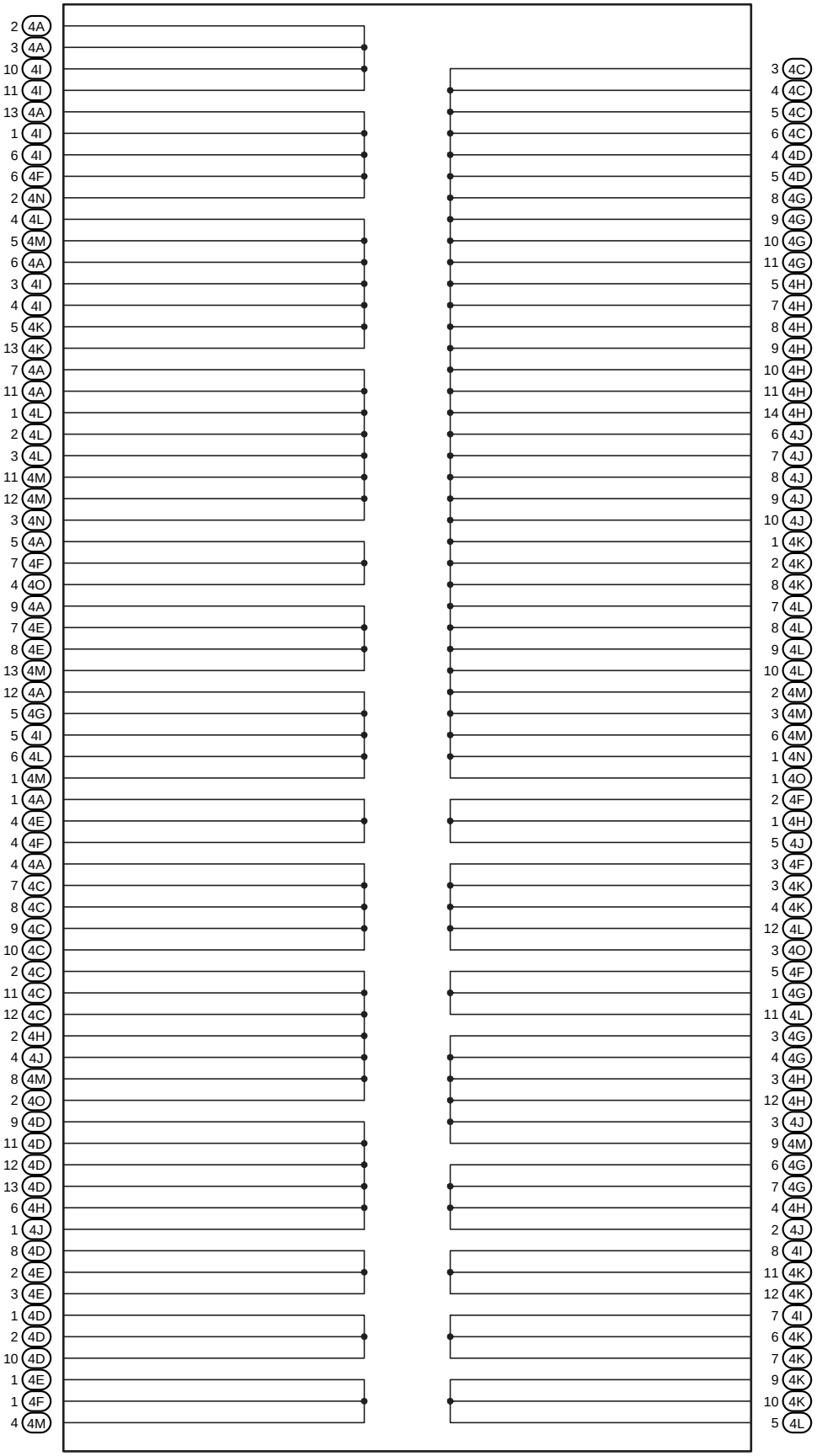

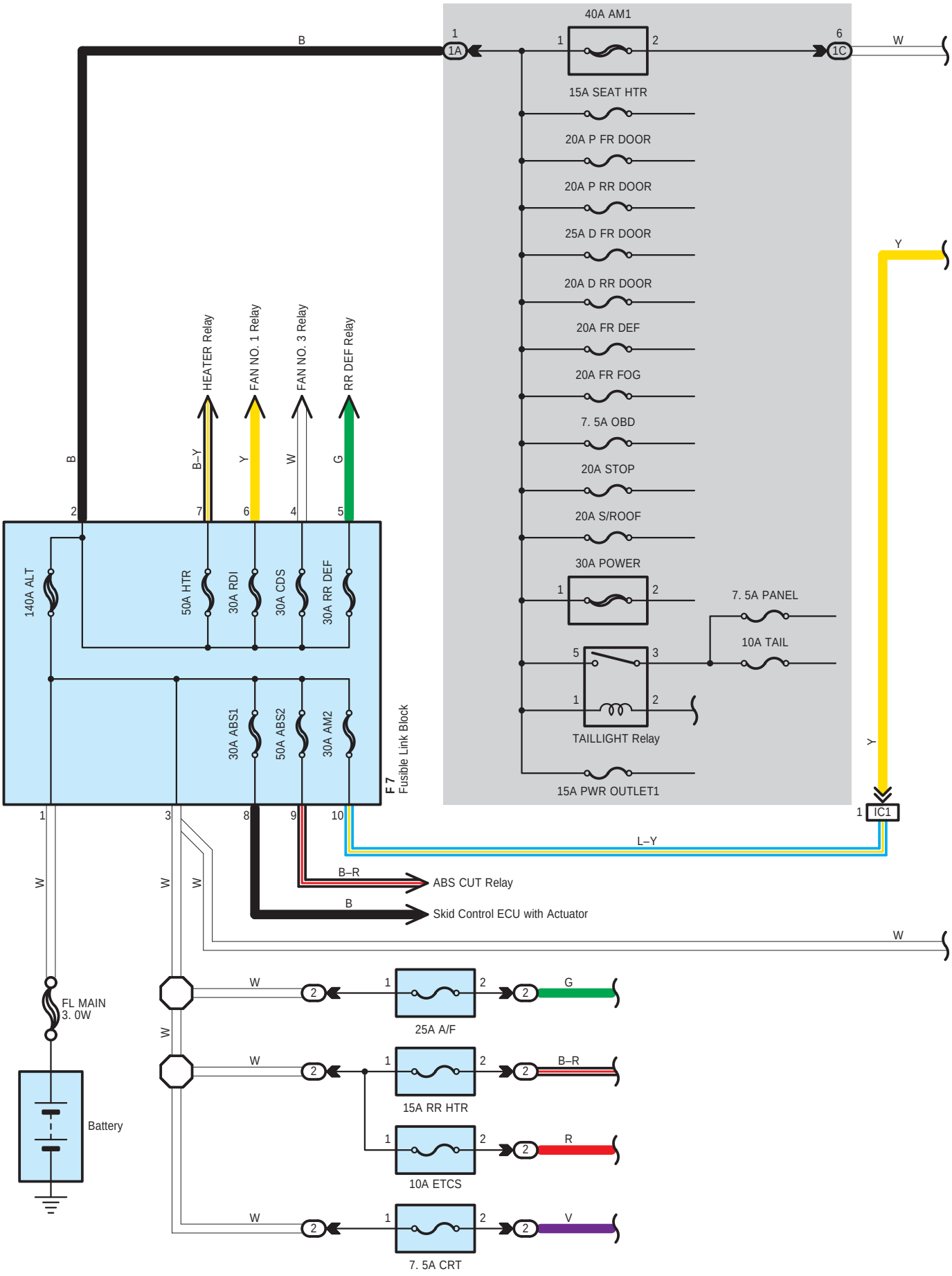
40A AM1
15A SEAT HTR
20A P FR DOOR
20A P RR DOOR
25A D FR DOOR
20A D RR DOOR
20A FR DEF
20A FR FOG
7. 5A OBD
20A STOP
20A S/ROOF
30A POWER
7. 5A PANEL
10A TAIL
TAILLIGHT Relay
15A PWR OUTLET1
HEATER Relay
FAN NO. 1 Relay
FAN NO. 3 Relay
RR DEF Relay
140A ALT
50A HTR
30A RDI
30A CDS
30A RR DEF
30A ABS1
50A ABS2
30A AM2
F 7
Fusible Link Block
IC1
L–Y
B–R
ABS CUT Relay
Skid Control ECU with Actuator
FL MAIN
3. 0W
Battery
25A A/F
15A RR HTR
10A ETCS
7. 5A CRT

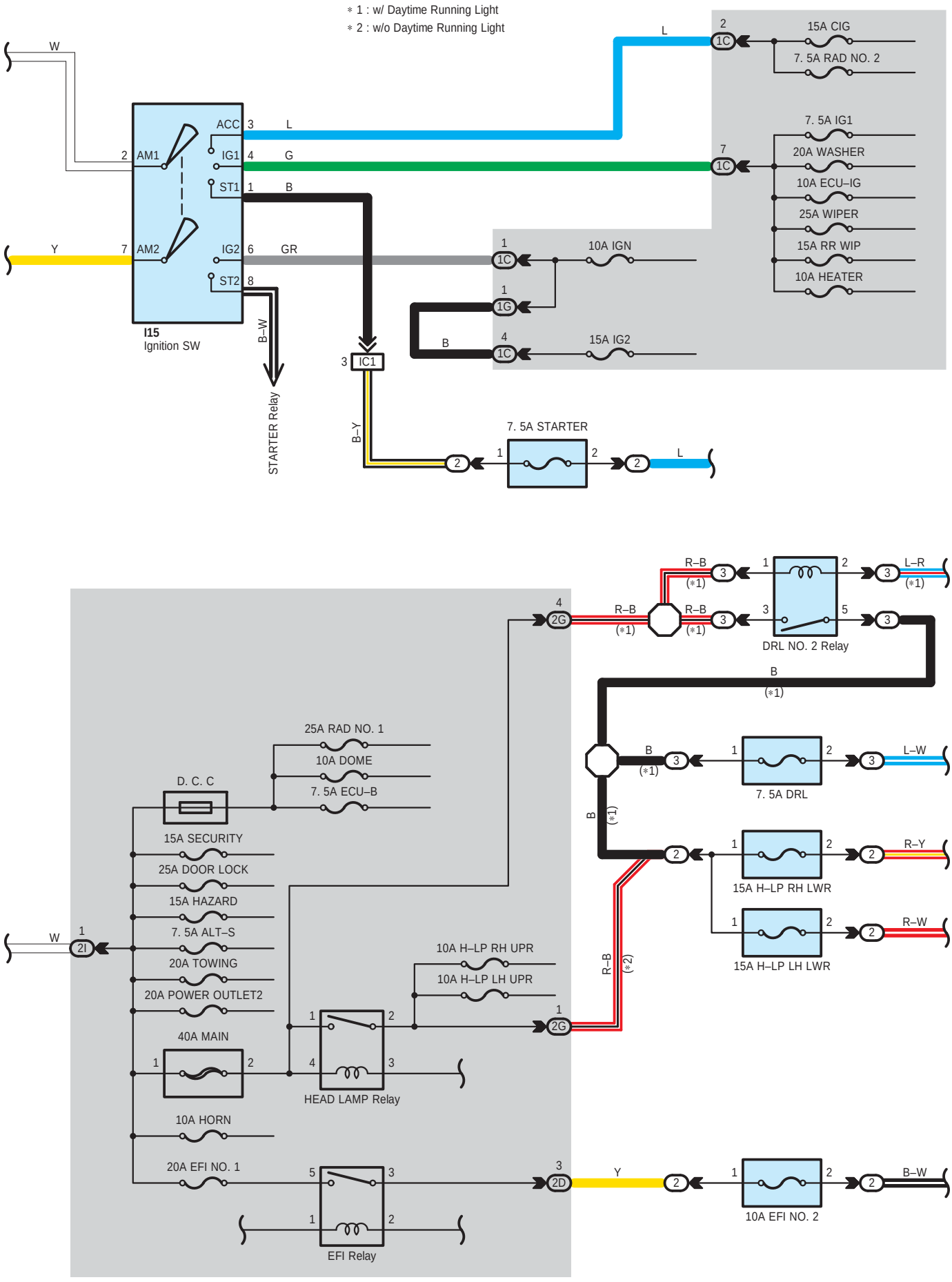
∗1 : w/ Daytime Running Light
∗2 : w/o Daytime Running Light
W
Y
2
AM1
7
AM2
ACC
3
L
IG1
4
G
ST1
1
B
IG2
6
GR
ST2
8
B–W
I15
Ignition SW
STARTER Relay
3
IC1
B–Y
B
L
2
1C
15A CIG
7. 5A RAD NO. 2
7
7. 5A IG1
20A WASHER
10A ECU–IG
25A WIPER
15A RR WIP
10A HEATER
1
10A IGN
1G
4
15A IG2
7. 5A STARTER
1
2
L
R–B
(∗1)
L–R
(∗1)
4
2G
DRL NO. 2 Relay
B
(∗1)
25A RAD NO. 1
10A DOME
7. 5A ECU–B
D. C. C
B
L–W
7. 5A DRL
15A SECURITY
25A DOOR LOCK
15A HAZARD
7. 5A ALT–S
20A TOWING
20A POWER OUTLET2
R–Y
15A H–LP RH LWR
R–W
15A H–LP LH LWR
W
2I
10A H–LP RH UPR
10A H–LP LH UPR
R–B
(∗2)
40A MAIN
HEAD LAMP Relay
10A HORN
20A EFI NO. 1
3
2D
Y
B–W
10A EFI NO. 2
EFI Relay

: Parts Location

Code	See Page	Code	See Page	Code	See Page
F7	38 (3MZ–FE)	F7	40 (2AZ–FE)	I15	43

: Relay Blocks

Code	See Page	Relay Blocks (Relay Block Location)
2	22	Engine Room R/B (Engine Compartment Left)
3	23	Engine Room R/B No.3 (Engine Compartment Rear Left)

: Junction Block and Wire Harness Connector

Code	See Page	Junction Block and Wire Harness (Connector Location)
1A	29	Engine Room Main Wire and Instrument Panel J/B (Lower Finish Panel)
1C	29	Cowl Wire and Instrument Panel J/B (Lower Finish Panel)
1G		
2D	27	Engine Room Main Wire and Engine Room J/B (Engine Compartment Left)
2G		
2I		

: Connector Joining Wire Harness and Wire Harness

Code	See Page	Joining Wire Harness and Wire Harness (Connector Location)
IC1	50	Engine Room Main Wire and Cowl Wire (Left Cowl Side Panel)

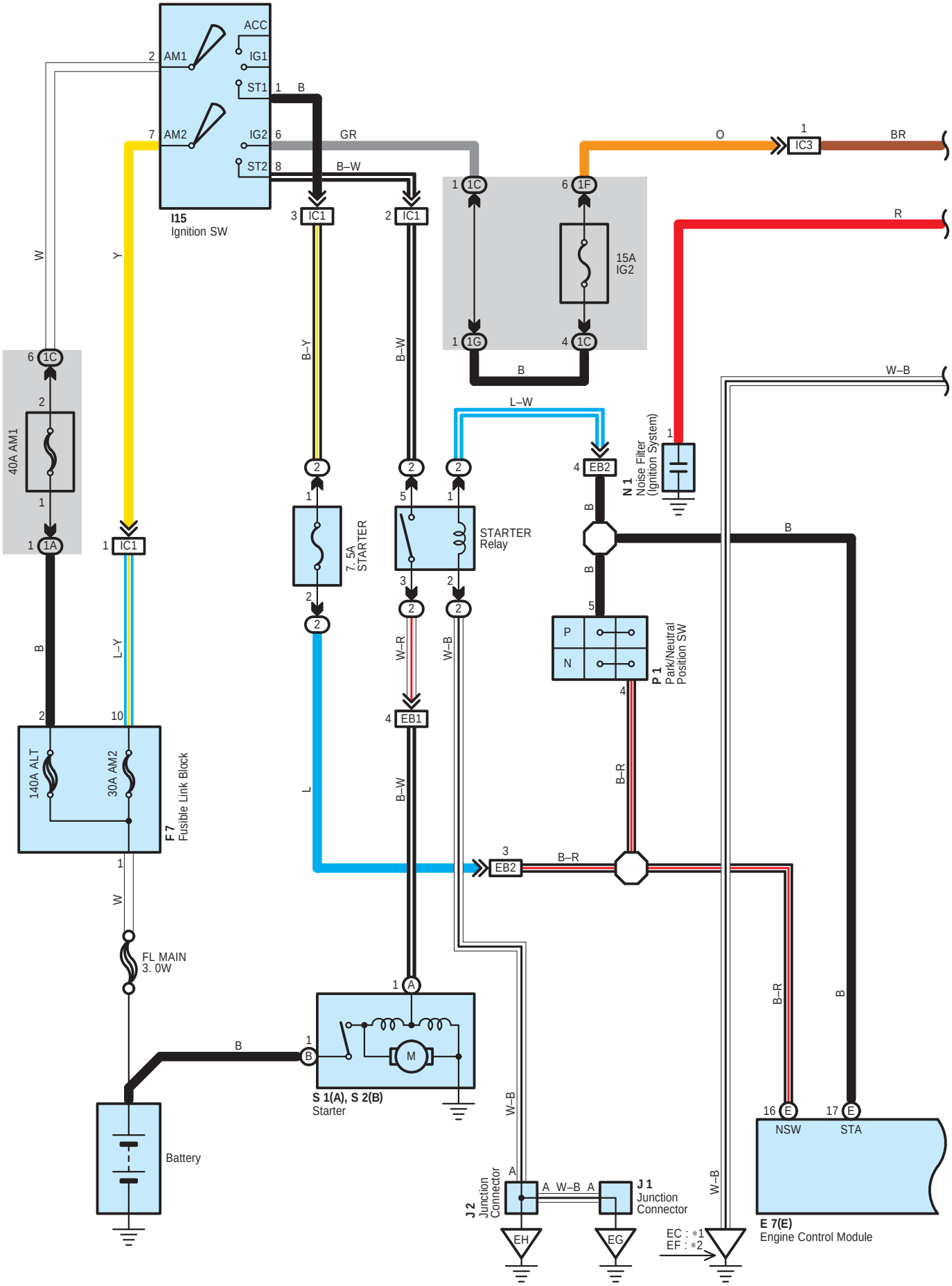
I15
Ignition SW
ACC
AM1
IG1
ST1
AM2
IG2
ST2
IC1
IC3
1C
1F
1G
1A
15A
IG2
40A AM1
7. 5A
STARTER
STARTER
Relay
N 1
Noise Filter
(Ignition System)
P 1
Park/Neutral
Position SW
P
N
EB1
EB2
F 7
Fusible Link Block
140A ALT
30A AM2
FL MAIN
3. 0W
Battery
S 1(A), S 2(B)
Starter
M
J 2
Junction
Connector
J 1
Junction
Connector
E 7(E)
Engine Control Module
NSW
STA
EH
EG
EC : *1
EF : *2
W
Y
B
L–Y
L
B–Y
B–W
W–R
W–B
L–W
GR
O
BR
R
B–R

∗ 1 : 3MZ–FE
∗ 2 : 2AZ–FE

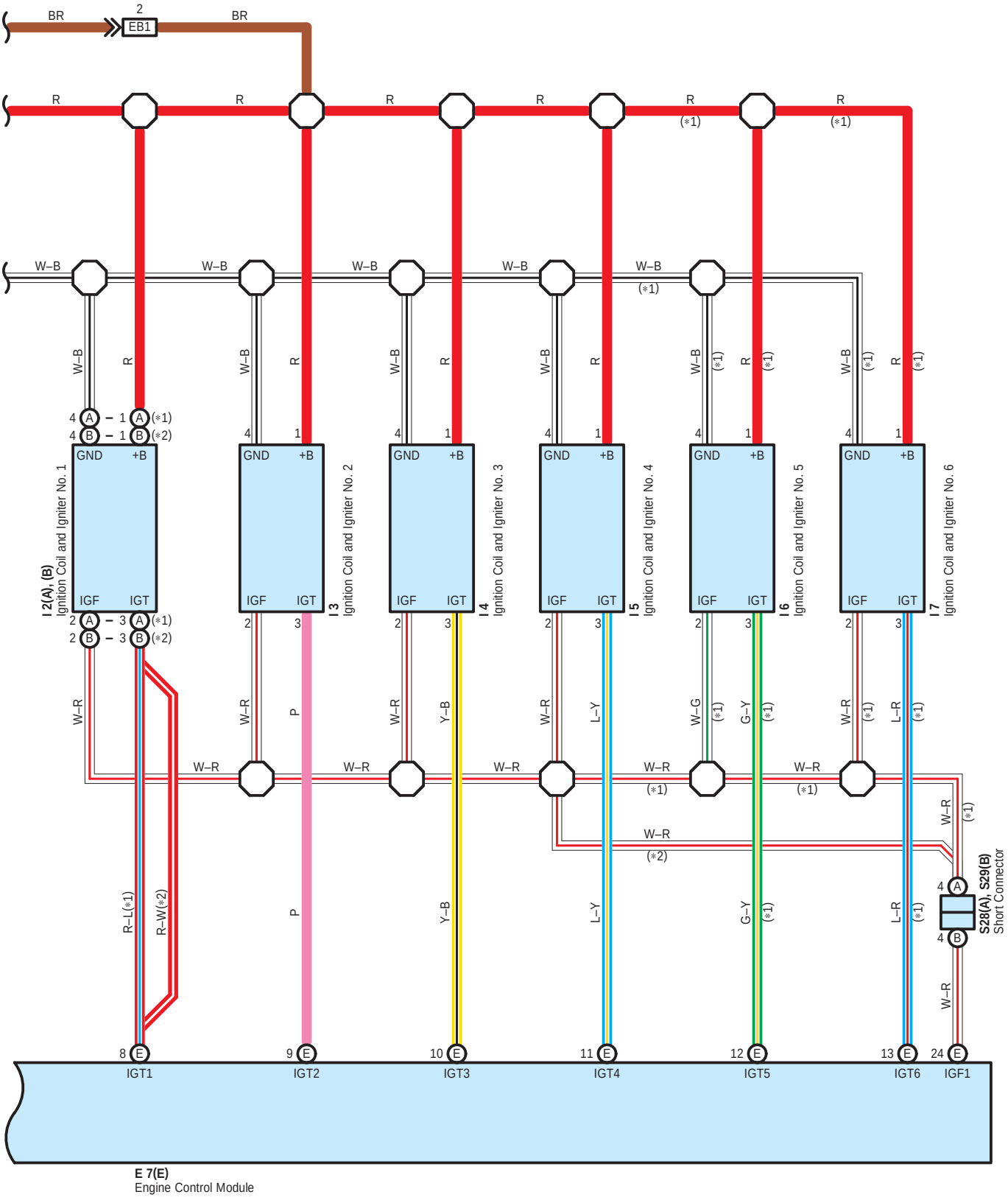

: Parts Location

Code		See Page	Code	See Page	Code		See Page
E7	E	42	I4	41 (2AZ–FE)	N1		39 (3MZ–FE)
F7		38 (3MZ–FE)	I5	39 (3MZ–FE)			41 (2AZ–FE)
		40 (2AZ–FE)		41 (2AZ–FE)	P1		39 (3MZ–FE)
I2	A	39 (3MZ–FE)	I6	39 (3MZ–FE)			41 (2AZ–FE)
		41 (2AZ–FE)	I7	39 (3MZ–FE)	S1	A	39 (3MZ–FE)
	B	39 (3MZ–FE)	I15	43			41 (2AZ–FE)
		41 (2AZ–FE)	J1	39 (3MZ–FE)	S2	B	39 (3MZ–FE)
I3		39 (3MZ–FE)		41 (2AZ–FE)			41 (2AZ–FE)
		41 (2AZ–FE)	J2	39 (3MZ–FE)	S28	A	43
I4		39 (3MZ–FE)		41 (2AZ–FE)	S29	B	43

: Relay Blocks

Code	See Page	Relay Blocks (Relay Block Location)
2	22	Engine Room R/B (Engine Compartment Left)

: Junction Block and Wire Harness Connector

Code	See Page	Junction Block and Wire Harness (Connector Location)
1A	29	Engine Room Main Wire and Instrument Panel J/B (Lower Finish Panel)
1C	29	Cowl Wire and Instrument Panel J/B (Lower Finish Panel)
1F		
1G		

: Connector Joining Wire Harness and Wire Harness

Code	See Page	Joining Wire Harness and Wire Harness (Connector Location)
EB1	48 (3MZ–FE)	Engine Wire and Engine Room Main Wire (Front Side of Engine Room R/B)
	49 (2AZ–FE)	
EB2	48 (3MZ–FE)	
	49 (2AZ–FE)	
IC1	50	Engine Room Main Wire and Cowl Wire (Left Cowl Side Panel)
IC3		

: Ground Points

Code	See Page	Ground Points Location
EC	48 (3MZ–FE)	Left Side of Cylinder Head
EF	49 (2AZ–FE)	Left Side of Cylinder Block
EG	48 (3MZ–FE)	Under the Left Headlight
	49 (2AZ–FE)	
EH	48 (3MZ–FE)	
	49 (2AZ–FE)	

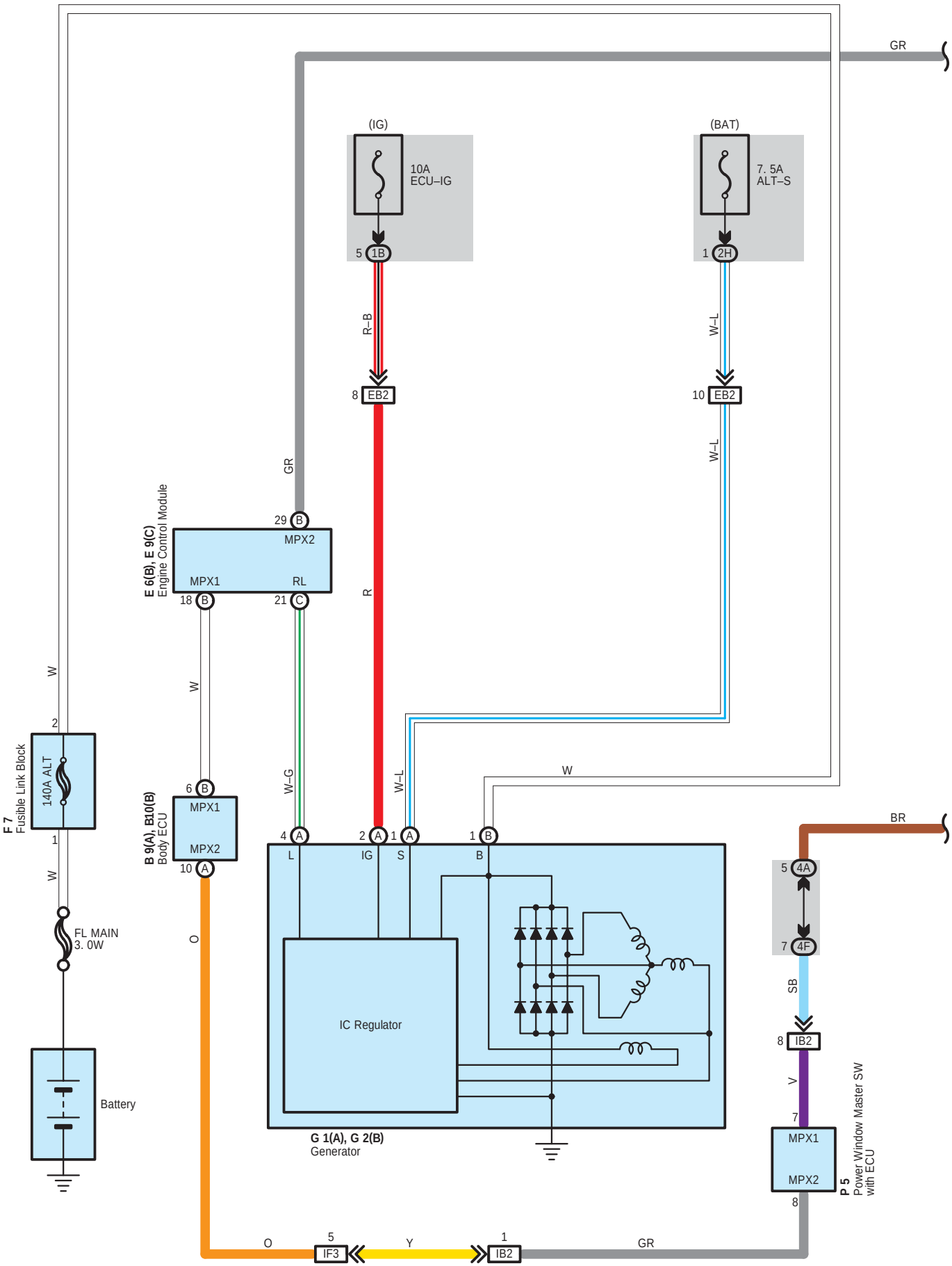
GR
(IG)
10A
ECU–IG
5 1B
(BAT)
7. 5A
ALT–S
1 2H
R–B
8 EB2
W–L
10 EB2
W–L
GR
29 B
MPX2
E 6(B), E 9(C)
Engine Control Module
MPX1
RL
18 B
21 C
R
W
W
2
F 7
Fusible Link Block
140A ALT
1
W
FL MAIN
3. 0W
Battery
6 B
MPX1
MPX2
10 A
B 9(A), B10(B)
Body ECU
W–G
4 A
L
2 A
IG
1 A
S
1 B
B
W
BR
5 4A
7 4F
SB
8 IB2
V
7
MPX1
MPX2
8
P 5
Power Window Master SW
with ECU
IC Regulator
G 1(A), G 2(B)
Generator
O
O
5
IF3
Y
1
IB2
GR

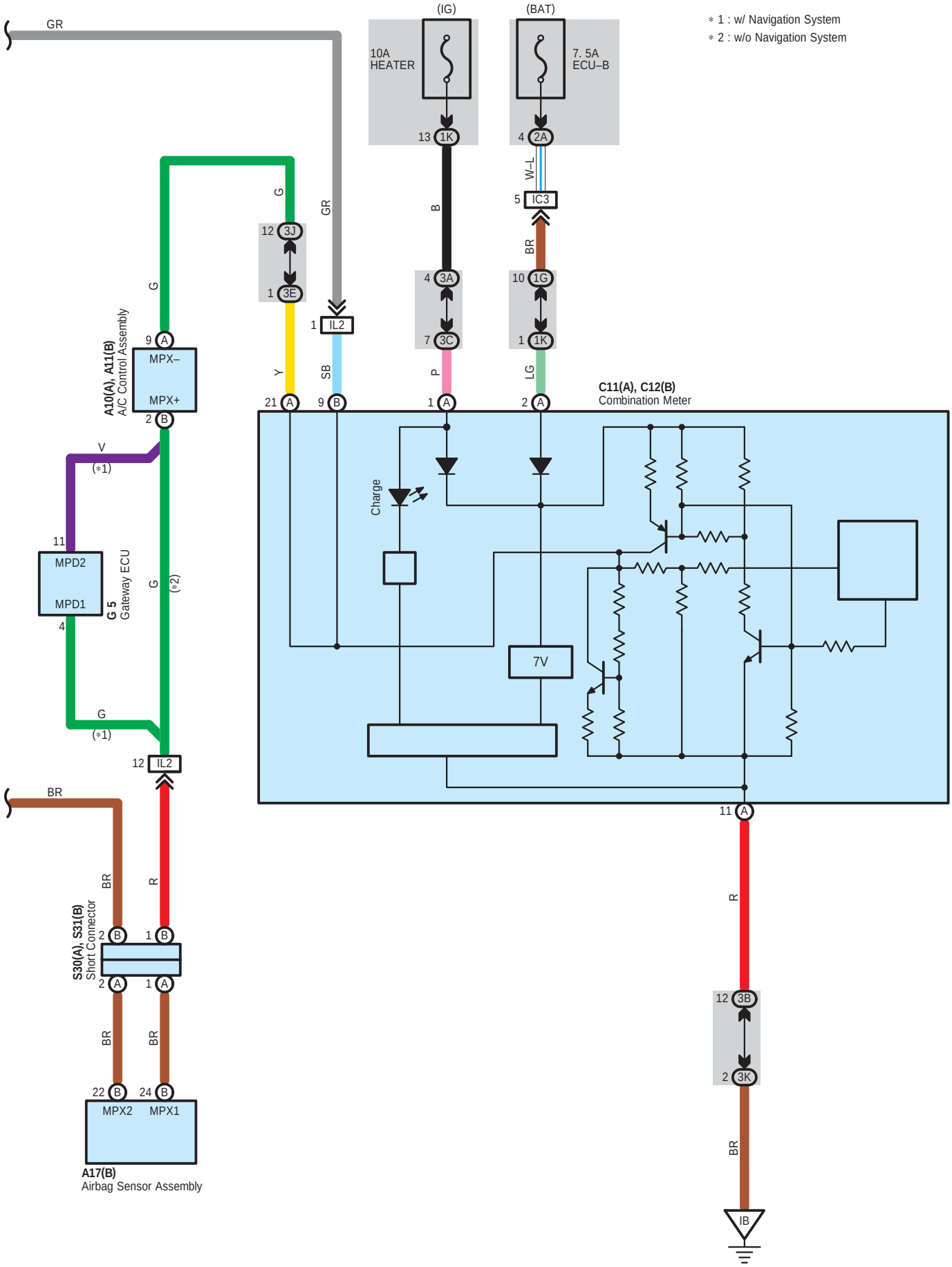
∗ 1 : w/ Navigation System
∗ 2 : w/o Navigation System
(IG)
(BAT)
10A
HEATER
7. 5A
ECU–B
GR
G
GR
B
W–L
BR
SB
P
LG
Y
V
(∗1)
G
(∗2)
G
(∗1)
BR
R
BR
BR
BR
A10(A), A11(B)
A/C Control Assembly
MPX–
MPX+
G 5
Gateway ECU
MPD2
MPD1
C11(A), C12(B)
Combination Meter
Charge
7V
S30(A), S31(B)
Short Connector
A17(B)
Airbag Sensor Assembly
MPX2
MPX1
IL2
IC3
IB

○ : Parts Location

Code		See Page	Code		See Page	Code		See Page
A10	A	42	E6	B	42	G2	B	40 (2AZ–FE)
A11	B	42	E9	C	42	G5		43
A17	B	42	F7		38 (3MZ–FE)	P5		44
B9	A	42			40 (2AZ–FE)	S30	A	43
B10	B	42	G1	A	38 (3MZ–FE)	S31	B	43
C11	A	42			40 (2AZ–FE)			
C12	B	42	G2	B	38 (3MZ–FE)			

: Junction Block and Wire Harness Connector

Code	See Page	Junction Block and Wire Harness (Connector Location)
1B	29	Engine Room Main Wire and Instrument Panel J/B (Lower Finish Panel)
1G	29	Cowl Wire and Instrument Panel J/B (Lower Finish Panel)
1K	28	Instrument Panel Wire and Instrument Panel J/B (Lower Finish Panel)
2A	27	Engine Room Main Wire and Engine Room J/B (Engine Compartment Left)
2H		
3A	30	Instrument Panel Wire and Center J/B (Behind the Instrument Panel Center)
3B		
3C		
3E		
3J	31	
3K		
4A	33	Cowl Wire and Passenger Side J/B (Right Side of Grove Box)
4F		

: Connector Joining Wire Harness and Wire Harness

Code	See Page	Joining Wire Harness and Wire Harness (Connector Location)
EB2	48 (3MZ–FE)	Engine Wire and Engine Room Main Wire (Front Side of Engine Room R/B)
	49 (2AZ–FE)	
IB2	50	Front Door LH Wire and Cowl Wire (Left Kick Panel)
IC3	50	Engine Room Main Wire and Cowl Wire (Left Cowl Side Panel)
IF3	50	Instrument Panel Wire and Cowl Wire (Right Side of Instrument Panel J/B)
IL2	51	Instrument Panel Wire and Cowl Wire (Upper Side of Passenger Side J/B)

: Ground Points

Code	See Page	Ground Points Location
IB	50	Right Instrument Panel Brace

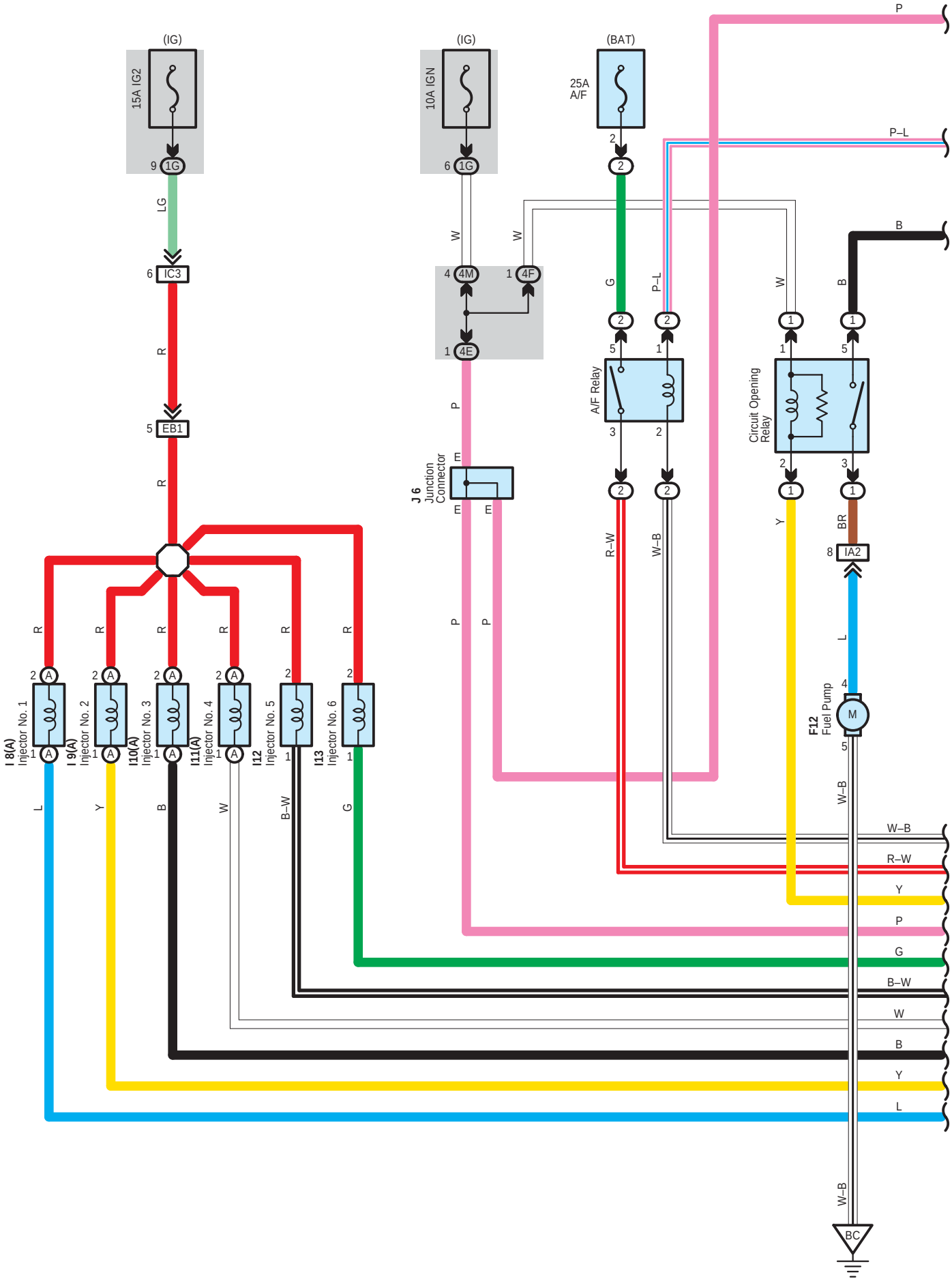
(IG)
15A IG2
9 1G
LG
6 IC3
R
5 EB1
R
(IG)
10A IGN
6 1G
W
4 4M
1 4F
1 4E
W
P
E
J 6
Junction
Connector
E
E
P
P
(BAT)
25A
A/F
2
2
G
P–L
5
2
1
A/F Relay
3
2
2
2
R–W
W–B
P–L
W
B
1
1
1
5
Circuit Opening
Relay
2
3
1
1
Y
BR
8 IA2
L
4
M
F12
Fuel Pump
5
W–B
P
B
R
2 A
1 A
I 8(A)
Injector No. 1
L
I 9(A)
Injector No. 2
Y
I10(A)
Injector No. 3
B
I11(A)
Injector No. 4
W
I12
Injector No. 5
B–W
I13
Injector No. 6
G
W–B
R–W
Y
P
G
B–W
W
B
Y
L
W–B
BC

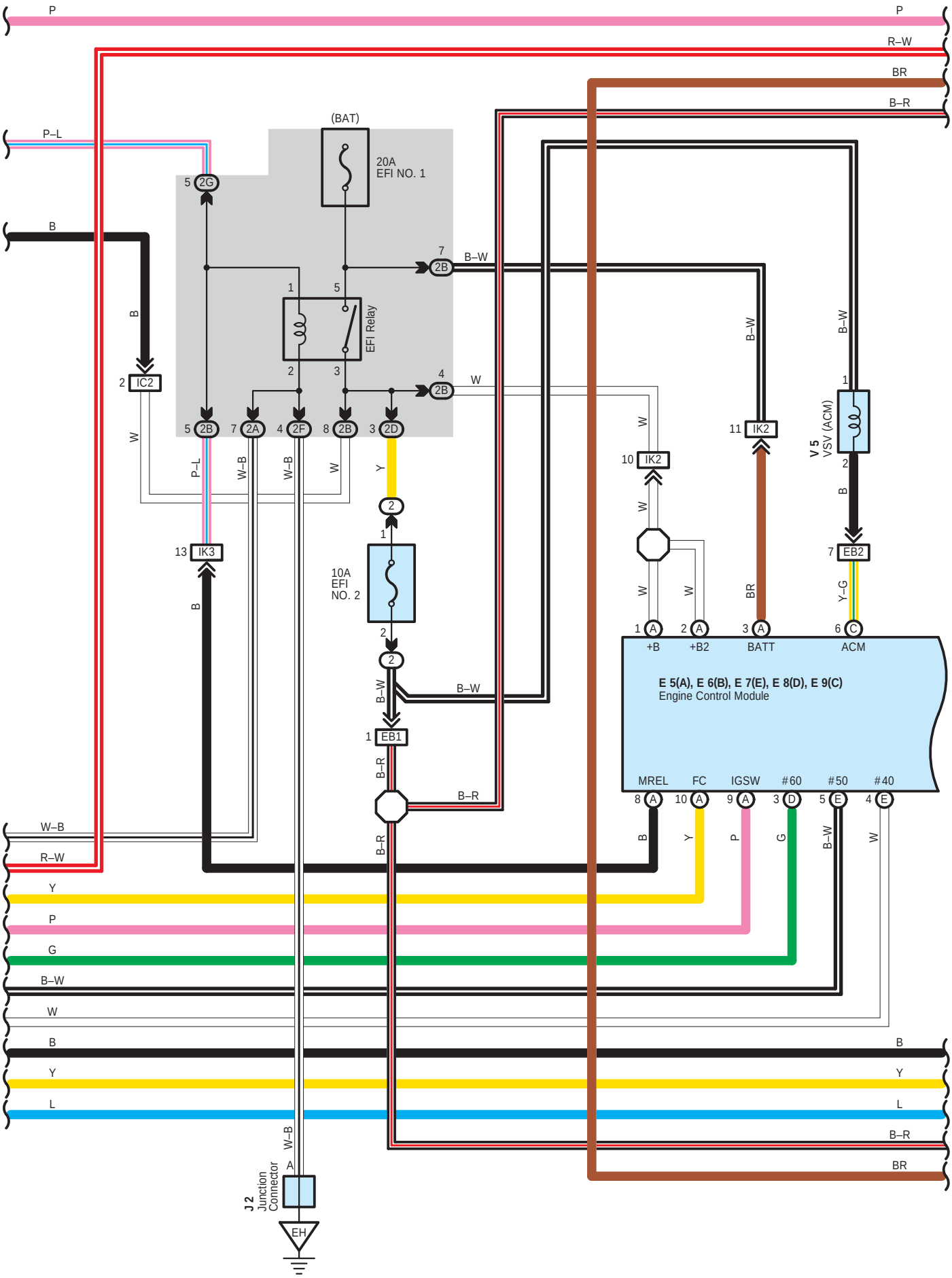
(BAT)
20A
EFI NO. 1
EFI Relay
10A
EFI
NO. 2
IC2
IK3
IK2
EB1
EB2
V 5
VSV (ACM)
J 2
Junction
Connector
EH
+B
+B2
BATT
ACM
E 5(A), E 6(B), E 7(E), E 8(D), E 9(C)
Engine Control Module
MREL
FC
IGSW
#60
#50
#40
P
R–W
BR
B–R
P–L
B
B–W
W
P–L
W–B
W–B
W
Y
W
B
W
W
BR
Y–G
B–W
B–R
B–R
W–B
R–W
Y
P
G
B–W
W
B
Y
L
W–B
B
B
Y
L
B–R
BR

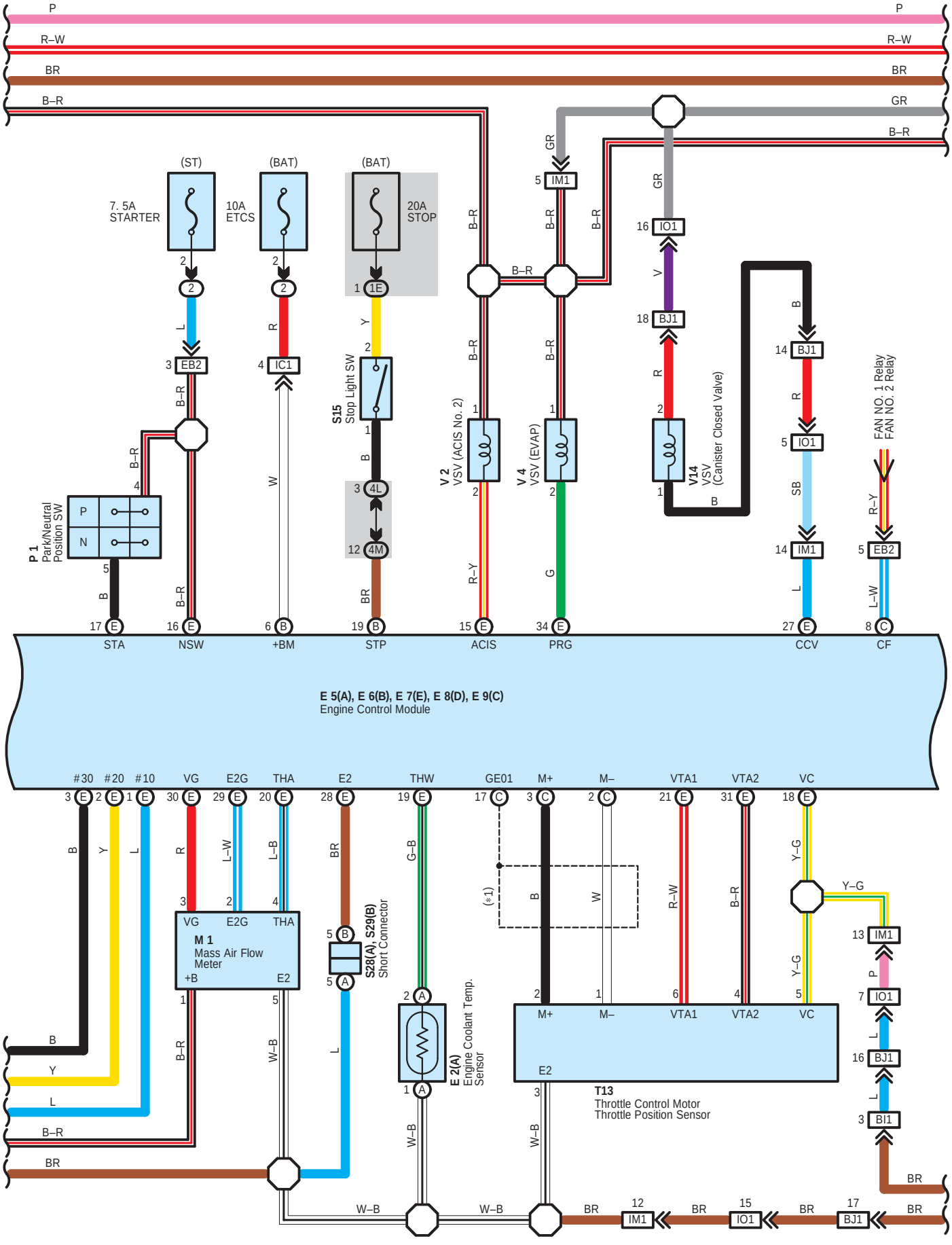
P
R–W
BR
B–R
GR
(ST)
(BAT)
(BAT)
7. 5A STARTER
10A ETCS
20A STOP
IM1
IO1
BJ1
EB2
IC1
1E
4L
4M
S15 Stop Light SW
V 2 VSV (ACIS No. 2)
V 4 VSV (EVAP)
V14 VSV (Canister Closed Valve)
FAN NO. 1 Relay
FAN NO. 2 Relay
P 1 Park/Neutral Position SW
STA
NSW
+BM
STP
ACIS
PRG
CCV
CF
E 5(A), E 6(B), E 7(E), E 8(D), E 9(C)
Engine Control Module
#30
#20
#10
VG
E2G
THA
E2
THW
GE01
M+
M–
VTA1
VTA2
VC
M 1 Mass Air Flow Meter
S28(A), S29(B) Short Connector
E 2(A) Engine Coolant Temp. Sensor
T13 Throttle Control Motor Throttle Position Sensor
(*1)

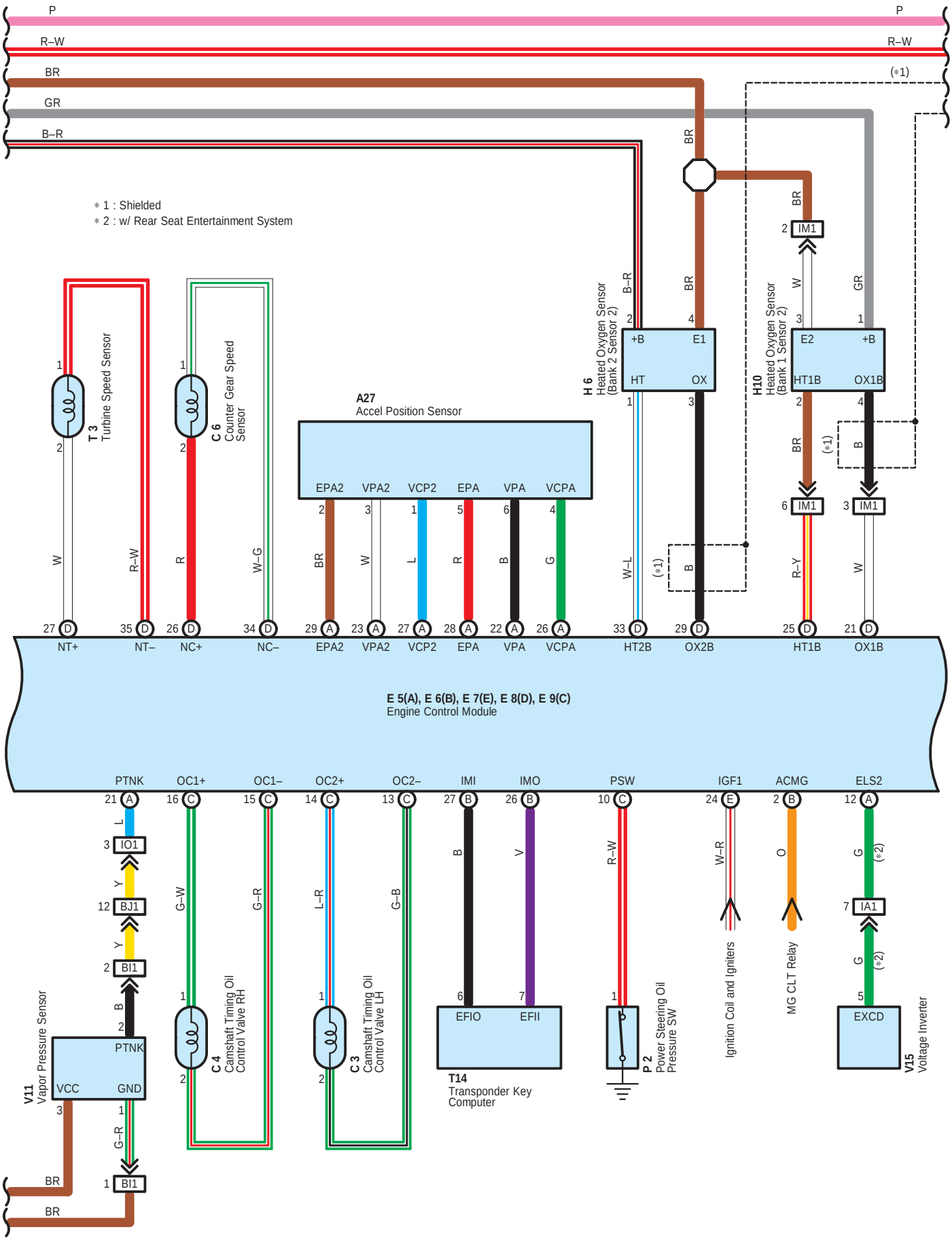
P
R–W
BR
GR
B–R
＊1 : Shielded
＊2 : w/ Rear Seat Entertainment System
T 3
Turbine Speed Sensor
C 6
Counter Gear Speed Sensor
A27
Accel Position Sensor
EPA2 VPA2 VCP2 EPA VPA VCPA
H 6
Heated Oxygen Sensor (Bank 2 Sensor 2)
+B E1 HT OX
H10
Heated Oxygen Sensor (Bank 1 Sensor 2)
E2 +B HT1B OX1B
IM1
(＊1)
NT+ NT– NC+ NC– EPA2 VPA2 VCP2 EPA VPA VCPA HT2B OX2B HT1B OX1B
E 5(A), E 6(B), E 7(E), E 8(D), E 9(C)
Engine Control Module
PTNK OC1+ OC1– OC2+ OC2– IMI IMO PSW IGF1 ACMG ELS2
V11
Vapor Pressure Sensor
VCC GND PTNK
C 4
Camshaft Timing Oil Control Valve RH
C 3
Camshaft Timing Oil Control Valve LH
T14
Transponder Key Computer
EFIO EFII
P 2
Power Steering Oil Pressure SW
Ignition Coil and Igniters
MG CLT Relay
EXCD
V15
Voltage Inverter
IO1 BJ1 BI1 IA1

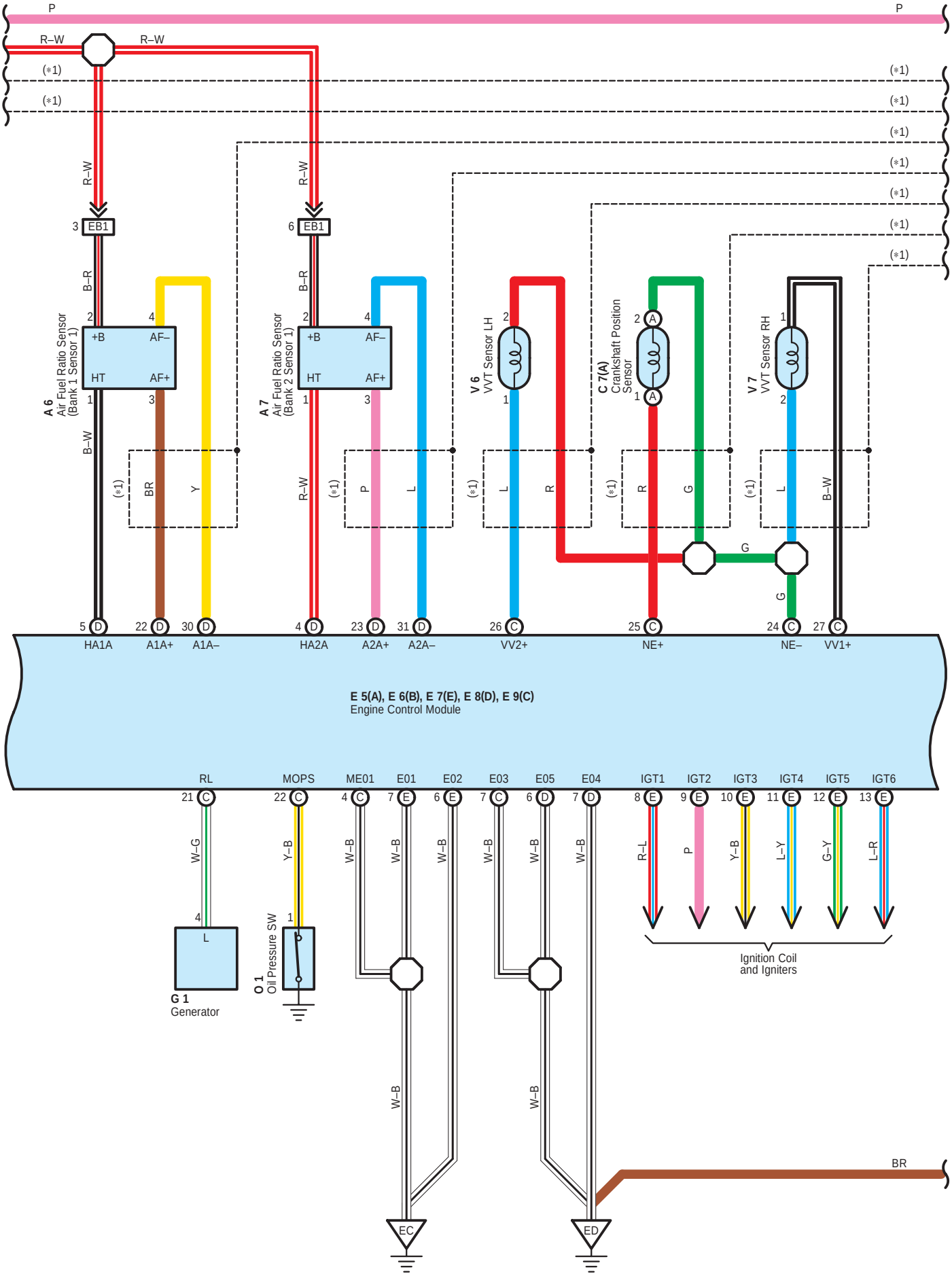
P
R–W
(*1)
EB1
B–R
B–W
A 6
Air Fuel Ratio Sensor
(Bank 1 Sensor 1)
+B
AF–
HT
AF+
BR
Y
A 7
Air Fuel Ratio Sensor
(Bank 2 Sensor 1)
P
L
V 6
VVT Sensor LH
R
C 7(A)
Crankshaft Position
Sensor
G
V 7
VVT Sensor RH
HA1A
A1A+
A1A–
HA2A
A2A+
A2A–
VV2+
NE+
NE–
VV1+
E 5(A), E 6(B), E 7(E), E 8(D), E 9(C)
Engine Control Module
RL
MOPS
ME01
E01
E02
E03
E05
E04
IGT1
IGT2
IGT3
IGT4
IGT5
IGT6
W–G
Y–B
R–L
L–Y
G–Y
L–R
G 1
Generator
O 1
Oil Pressure SW
Ignition Coil
and Igniters
EC
ED
BR

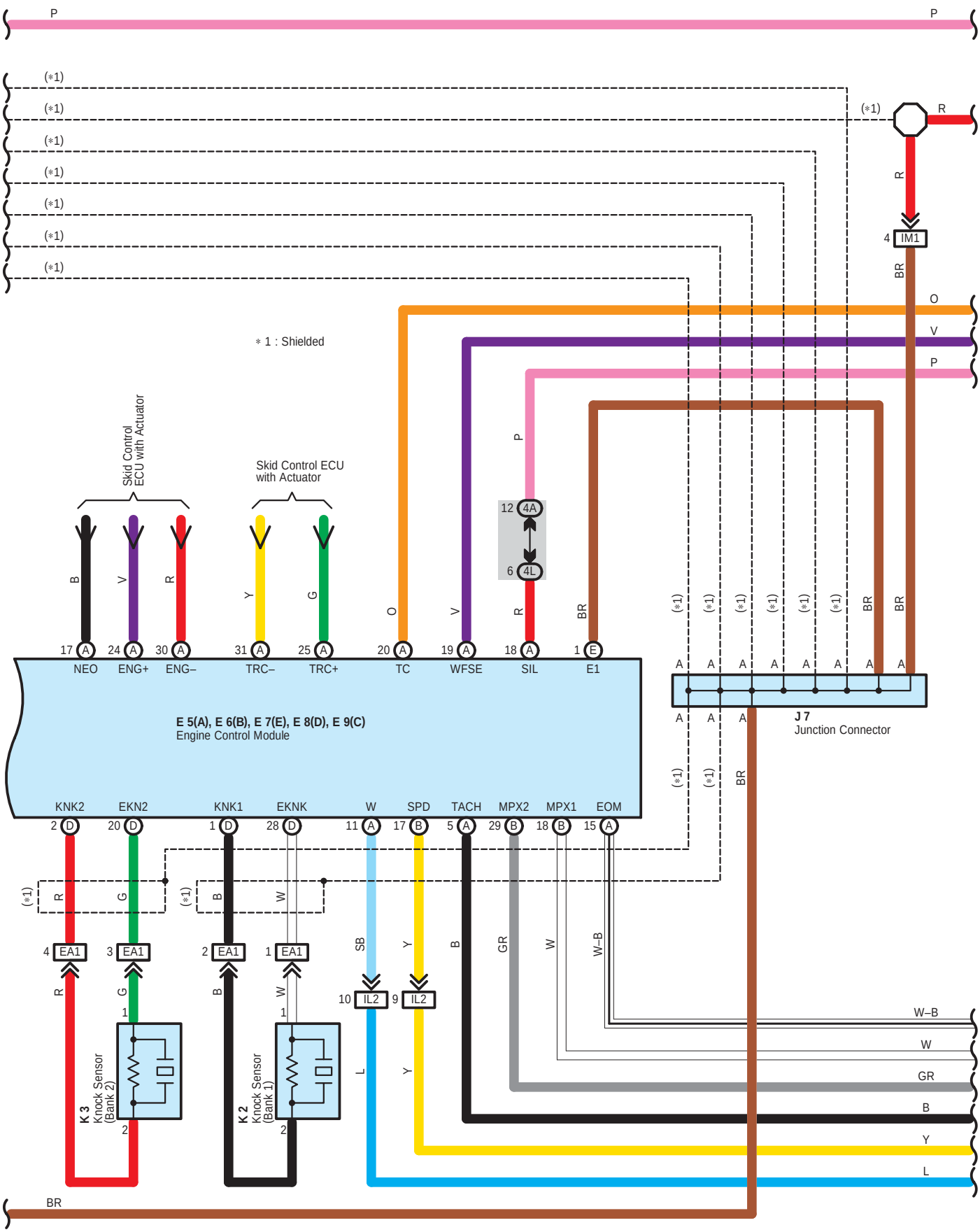
P
P
(*1)
(*1)
(*1)
(*1)
(*1)
(*1)
(*1)
(*1)
R
R
4 IM1
BR
O
V
P
* 1 : Shielded
Skid Control ECU with Actuator
Skid Control ECU with Actuator
B
V
R
Y
G
O
V
P
R
BR
12 4A
6 4L
17 A NEO
24 A ENG+
30 A ENG–
31 A TRC–
25 A TRC+
20 A TC
19 A WFSE
18 A SIL
1 E E1
E 5(A), E 6(B), E 7(E), E 8(D), E 9(C)
Engine Control Module
J 7
Junction Connector
KNK2
EKN2
KNK1
EKNK
W
SPD
TACH
MPX2
MPX1
EOM
2 D
20 D
1 D
28 D
11 A
17 B
5 A
29 B
18 B
15 A
R
G
B
W
4 EA1
3 EA1
2 EA1
1 EA1
SB
Y
B
GR
W
W–B
10 IL2
9 IL2
L
Y
K 3 Knock Sensor (Bank 2)
K 2 Knock Sensor (Bank 1)
W–B
W
GR
B
Y
L
BR

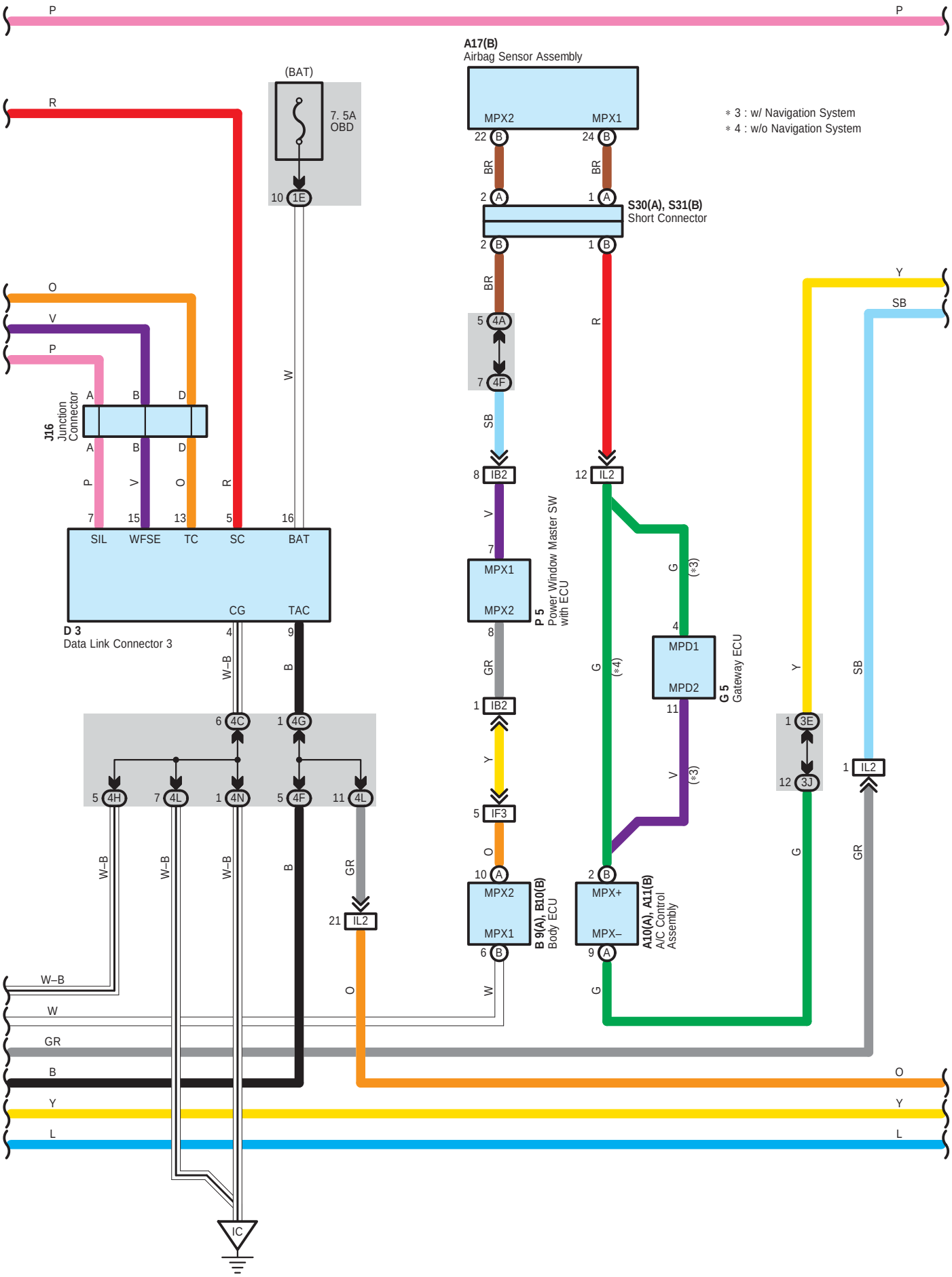
P
P
A17(B)
Airbag Sensor Assembly
MPX2
MPX1
22 B
24 B
BR
BR
2 A
1 A
S30(A), S31(B)
Short Connector
2 B
1 B
BR
R
5 4A
7 4F
SB
8 IB2
12 IL2
V
7
MPX1
MPX2
8
GR
1 IB2
Y
5 IF3
O
10 A
MPX2
MPX1
6 B
P 5
Power Window Master SW with ECU
G
(*3)
G
(*4)
4
MPD1
MPD2
11
V
(*3)
G 5
Gateway ECU
2 B
MPX+
MPX–
9 A
A10(A), A11(B)
A/C Control Assembly
B 9(A), B10(B)
Body ECU
* 3 : w/ Navigation System
* 4 : w/o Navigation System
(BAT)
7. 5A
OBD
10 1E
W
R
O
V
P
J16
Junction Connector
A
B
D
P
V
O
R
7
15
13
5
16
SIL
WFSE
TC
SC
BAT
CG
TAC
D 3
Data Link Connector 3
4
9
W–B
B
6 4C
1 4G
5 4H
7 4L
1 4N
5 4F
11 4L
W–B
W–B
W–B
B
GR
21 IL2
O
W–B
W
GR
B
Y
L
IC
Y
SB
1 3E
12 3J
1 IL2
G
GR
O
Y
L

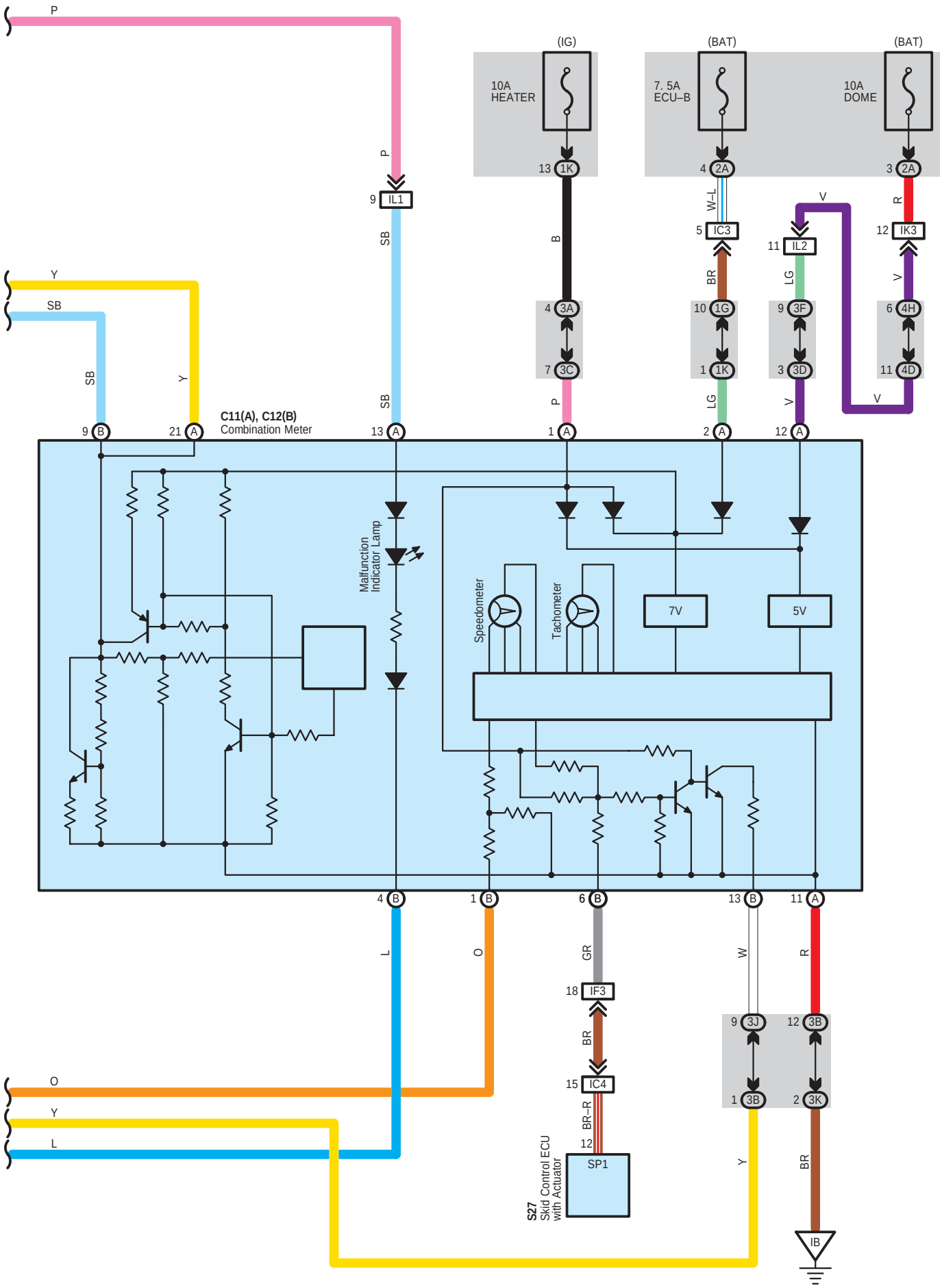
P
(IG)
(BAT)
(BAT)
10A
HEATER
7. 5A
ECU–B
10A
DOME
13 1K
4 2A
3 2A
9 IL1
W–L
R
B
5 IC3
12 IK3
V
11 IL2
Y
SB
BR
LG
V
4 3A
10 1G
9 3F
6 4H
SB
SB
7 3C
1 1K
3 3D
11 4D
P
LG
V
V
C11(A), C12(B)
Combination Meter
9 B
21 A
13 A
1 A
2 A
12 A
Malfunction
Indicator Lamp
Speedometer
Tachometer
7V
5V
4 B
1 B
6 B
13 B
11 A
L
O
GR
W
R
18 IF3
9 3J
12 3B
BR
15 IC4
1 3B
2 3K
O
Y
L
BR–R
12
Y
BR
SP1
S27
Skid Control ECU
with Actuator
IB

System Outline

The engine control system utilizes a microcomputer and maintains overall control of the engine, transmission etc. An outline of the engine control is given here.

1. Input Signals

(1) Engine coolant temp. signal circuit

The engine coolant temp. sensor detects the engine coolant temp. and has a built–in thermistor with a resistance, which varies according to the engine coolant temp. The engine coolant temp. which is input into TERMINAL THW of the engine control module as a control signal.

(2) Intake air temp. signal circuit

The intake air temp. sensor is installed in the mass air flow meter and detects the intake air temp. which is input as a control signal to TERMINAL THA of the engine control module.

(3) Vehicle speed signal circuit

The vehicle speed signal is input from the ABS speed sensor to skid control ECU with actuator, and are sent to the engine control module through communication control.

(4) RPM signal circuit

Camshaft position is detected by the VVT sensors and its signal is input to TERMINALS VV1+ and VV2+ of the engine control module as a control signal. Also, engine RPM is detected by the crankshaft position sensor and is input as a control signal to TERMINAL NE+.

(5) Throttle position signal circuit

The throttle control motor and sensor detects the throttle valve opening angle as a control signal, which is input into TERMINALS VTA1 and VTA2 of the engine control module.

(6) Battery signal circuit

Voltage is constantly applied to TERMINAL BATT of the engine control module. With the ignition SW turned on, the voltage for engine control module start–up power supply is applied to TERMINALS +B and +B2 of the engine control module via the EFI relay.

The current flowing through the IGN fuse flows to TERMINAL IGSW of the engine control module.

(7) Intake air volume signal circuit

Intake air volume is detected by the mass air flow meter and the signal is input to TERMINAL VG of the engine control module as a control signal.

(8) Stop light SW signal circuit

The stop light SW is used to detect whether the vehicle is braking or not and the signal is input into TERMINAL STP of the engine control module as a control signal.

(9) Starter signal circuit

To confirm whether the engine is cranking, the voltage is applied to the starter motor during cranking is detected and the signal is input into TERMINAL STA of the engine control module as a control signal.

(10) Engine knock signal circuit

Engine knocking is detected by knock sensors and the signal is input into TERMINALS KNK1 and KNK2 as a control signal.

(11) Air fuel ration signal circuit

The air fuel ration is detected and input as a control signal into TERMINALS A1A+ and A2A+ of the engine control module.

(12) Oxygen sensor signal circuit

The oxygen density in the exhaust gases is detected and input as a control signal into TERMINALS OX1B and OX2B of the engine control module.

To maintain stable detection performance by the heated oxygen sensor, a heater is used for warning the sensor. The heater is also controlled by the engine control module (HT1B and HT2B).

(13) Fuel cut in a collision

The system receives the collision signal from airbag sensor assembly in the vehicle has a collision and stops the fuel pump operation on the side of the engine control module.

2. Control System

* SFI system
  The SFI system monitors the engine condition through the signals input from each sensor (Input signals from (1) to (12) etc.) to the engine control module. And the control signal is output to TERMINALS #10, #20, #30, #40, #50 and #60 of the engine control module to operate the injector (Inject the fuel). The SFI system controls the fuel injection operation by the engine control module in response to the driving conditions.
* ESA system
  The ESA system monitors the engine condition through the signals input to the engine control module from each sensor (Input signals from (1) to (12) etc.). The best ignition timing is decided according to this data and the memorized data in the engine control module and the control signal is output to TERMINALS IGT1, IGT2, IGT3, IGT4, IGT5 and IGT6. This signal controls the igniter to provide the best ignition timing for the driving conditions.
* ACIS
  The ACIS includes a valve in the bulkhead separating the surge tank into two parts. This valve is opened or closed according to the driving conditions to control the intake manifold length in three stages, for increased engine output in all ranges from low to high speeds, when idling.

3. Diagnosis System

With the diagnosis system, when there is a malfunction in the engine control module signal system, the malfunctioning system is recorded in the memory. The malfunctioning system can be found by reading the code displayed by the malfunction indicator lamp.

4. Fail–Safe System

When a malfunction has occurred in any system, if there is a possibility of engine trouble being caused by continued control based on the signals from that system, the fail–safe system either controls the system by using data (Standard values) recorded in the engine control module memory or else stops the engine.

○ : Parts Location

Code	See Page	Code	See Page	Code	See Page
A6	38 (3MZ–FE)	E9 C	42	P1	39 (3MZ–FE)
A7	38 (3MZ–FE)	F12	44	P2	39 (3MZ–FE)
A10 A	42	G1	38 (3MZ–FE)	P5	44
A11 B	42	G5	43	S15	43
A17 B	42	H6	38 (3MZ–FE)	S27	39 (3MZ–FE)
A27	42	H10	43	S28 A	43
B9 A	42	I8 A	39 (3MZ–FE)	S29 B	43
B10 B	42	I9 A	39 (3MZ–FE)	S30 A	43
C3	38 (3MZ–FE)	I10 A	39 (3MZ–FE)	S31 B	43
C4	38 (3MZ–FE)	I11 A	39 (3MZ–FE)	T3	39 (3MZ–FE)
C6	38 (3MZ–FE)	I12	39 (3MZ–FE)	T13	39 (3MZ–FE)
C7 A	38 (3MZ–FE)	I13	39 (3MZ–FE)	T14	43
C11 A	42	J2	39 (3MZ–FE)	V2	39 (3MZ–FE)
C12 B	42	J6	43	V4	39 (3MZ–FE)
D3	42	J7	43	V5	39 (3MZ–FE)
E2 A	38 (3MZ–FE)	J16	43	V6	39 (3MZ–FE)
E5 A	42	K2	39 (3MZ–FE)	V7	39 (3MZ–FE)
E6 B	42	K3	39 (3MZ–FE)	V11	45
E7 E	42	M1	39 (3MZ–FE)	V14	45
E8 D	42	O1	39 (3MZ–FE)	V15	45

⬭ : Relay Blocks

Code	See Page	Relay Blocks (Relay Block Location)
1	24	R/B No.1 (Lower Finish Panel)
2	22	Engine Room R/B (Engine Compartment Left)

: Junction Block and Wire Harness Connector

Code	See Page	Junction Block and Wire Harness (Connector Location)
1E	29	Cowl Wire and Instrument Panel J/B (Lower Finish Panel)
1G		
1K	28	Instrument Panel Wire and Instrument Panel J/B (Lower Finish Panel)
2A	27	Engine Room Main Wire and Engine Room J/B (Engine Compartment Left)
2B		
2D		
2F		
2G		
3A	30	Instrument Panel Wire and Center J/B (Behind the Instrument Panel Center)
3B		
3C		
3D		
3E		
3F		
3J	31	
3K		
4A	33	Cowl Wire and Passenger Side J/B (Right Side of Grove Box)
4C		
4D		
4E		
4F		
4G		
4H		
4L	32	
4M		
4N		

: Connector Joining Wire Harness and Wire Harness

Code	See Page	Joining Wire Harness and Wire Harness (Connector Location)
EA1	48 (3MZ–FE)	Engine Wire and Sensor Wire (Right Side of Cylinder Head)
EB1	48 (3MZ–FE)	Engine Wire and Engine Room Main Wire (Front Side of Engine Room R/B)
EB2		
IA1	50	Cowl Wire and Floor No.2 Wire (Left Kick Panel)
IA2		
IB2	50	Front Door LH Wire and Cowl Wire (Left Kick Panel)
IC1	50	Engine Room Main Wire and Cowl Wire (Left Cowl Side Panel)
IC2		
IC3		
IC4		
IF3	50	Instrument Panel Wire and Cowl Wire (Right Side of Instrument Panel J/B)
IK2	51	Engine Room Main Wire and Cowl Wire (Right Cowl Side Panel)
IK3		
IL1	51	Instrument Panel Wire and Cowl Wire (Upper Side of Passenger Side J/B)
IL2		
IM1	51	Engine Wire and Cowl Wire (Right Kick Panel)
IO1	51	Cowl Wire and Floor Wire (Right Kick Panel)
BI1	52	Floor No.4 Wire and Fuel Tank Wire (Right Side of Rear Floor Crossmember)
BJ1	52	Floor Wire and Floor No.4 Wire (Right Side of Rear Floor Crossmember)

▽ : **Ground Points**

Code	See Page	Ground Points Location
EC	48 (3MZ–FE)	Left Side of Cylinder Head
ED	48 (3MZ–FE)	Rear Side of Cylinder Head
EH	48 (3MZ–FE)	Under the Left Headlight
IB	50	Right Instrument Panel Brace
IC	50	Right Cowl Side Panel
BC	52	Left Side of Rear Cross Member

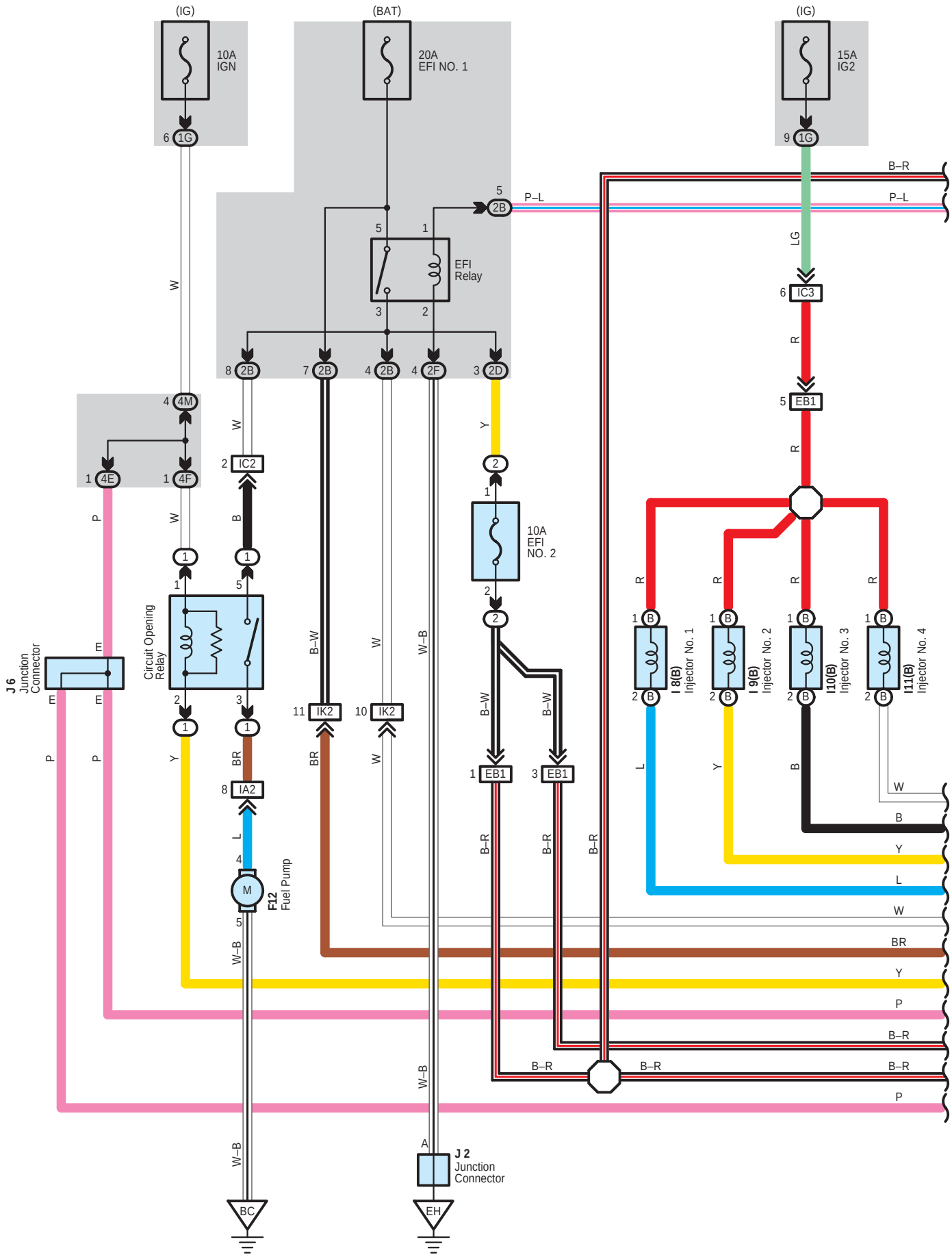
(IG)
10A
IGN
6 1G
(BAT)
20A
EFI NO. 1
(IG)
15A
IG2
9 1G
B–R
P–L
5 2B
P–L
LG
EFI
Relay
6 IC3
R
5 EB1
R
W
8 2B
7 2B
4 2B
4 2F
3 2D
4 4M
1 4E
1 4F
W
2 IC2
B
Y
2
1
10A
EFI
NO. 2
2
2
P
W
B
1
1
1
5
Circuit Opening
Relay
J 6
Junction
Connector
E
E
E
2
3
1
1
B–W
W
W–B
11 IK2
10 IK2
BR
BR
W
8 IA2
L
4
M
F12
Fuel Pump
5
W–B
1 EB1
3 EB1
B–R
B–R
B–R
R
R
R
R
1 B
2 B
I 8(B)
Injector No. 1
I 9(B)
Injector No. 2
I10(B)
Injector No. 3
I11(B)
Injector No. 4
L
Y
B
W
B
Y
L
W
BR
Y
P
B–R
B–R
B–R
B–R
P
W–B
A
J 2
Junction
Connector
BC
EH

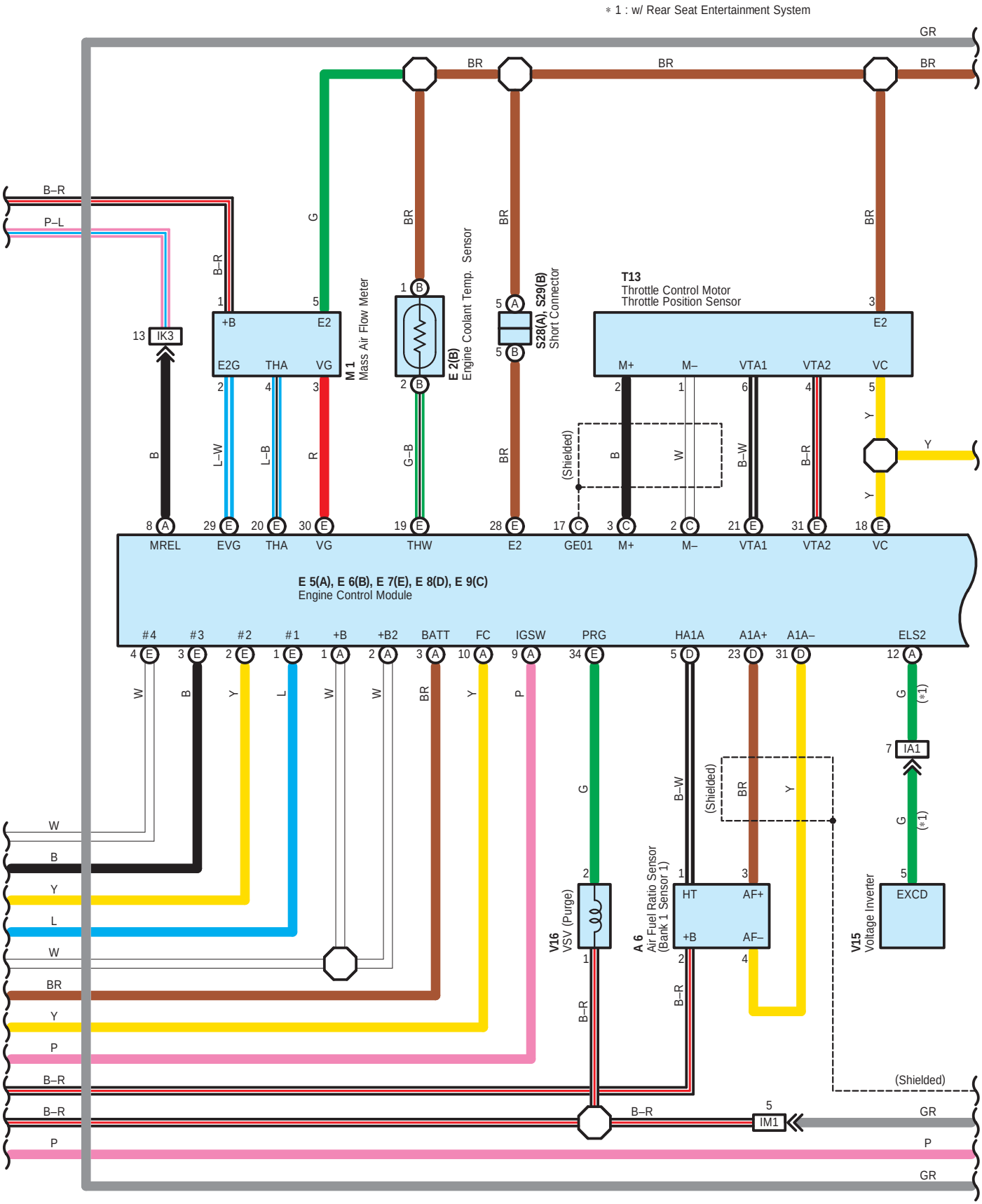
* 1 : w/ Rear Seat Entertainment System
GR
BR
BR
BR
B–R
P–L
G
BR
BR
BR
B–R
1
5
1
5
3
+B
E2
E2G
THA
VG
M 1
Mass Air Flow Meter
E 2(B)
Engine Coolant Temp. Sensor
S28(A), S29(B)
Short Connector
T13
Throttle Control Motor
Throttle Position Sensor
E2
M+
M–
VTA1
VTA2
VC
13
IK3
2
4
3
2
5
5
6
4
5
B
L–W
L–B
R
G–B
BR
(Shielded)
B
W
B–W
B–R
Y
Y
Y
8
29
20
30
19
28
17
3
2
21
31
18
MREL
EVG
THA
VG
THW
E2
GE01
M+
M–
VTA1
VTA2
VC
E 5(A), E 6(B), E 7(E), E 8(D), E 9(C)
Engine Control Module
#4
#3
#2
#1
+B
+B2
BATT
FC
IGSW
PRG
HA1A
A1A+
A1A–
ELS2
4
3
2
1
1
2
3
10
9
34
5
23
31
12
W
B
Y
L
W
W
BR
Y
P
G
B–W
BR
Y
G
G
(*1)
(*1)
7
IA1
(Shielded)
V16
VSV (Purge)
A 6
Air Fuel Ratio Sensor
(Bank 1 Sensor 1)
V15
Voltage Inverter
2
1
1
2
3
1
3
5
HT
AF+
+B
AF–
EXCD
B–R
B–R
W
B
Y
L
W
BR
Y
P
B–R
B–R
P
(Shielded)
B–R
5
IM1
GR
P
GR

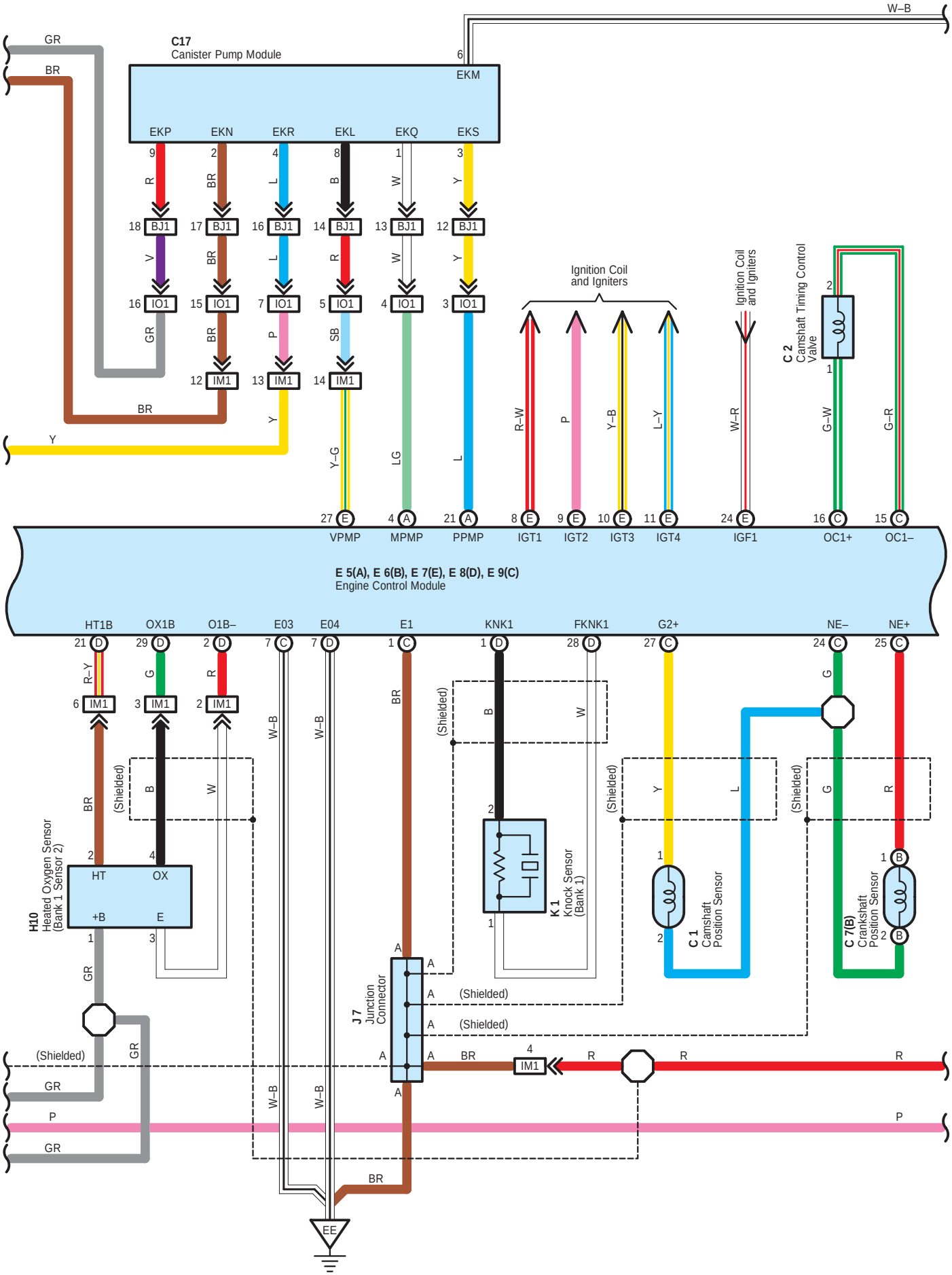
W–B
GR
BR
C17
Canister Pump Module
6
EKM
EKP
EKN
EKR
EKL
EKQ
EKS
9
2
4
8
1
3
R
BR
L
B
W
Y
18 BJ1
17 BJ1
16 BJ1
14 BJ1
13 BJ1
12 BJ1
V
BR
L
R
W
Y
16 IO1
15 IO1
7 IO1
5 IO1
4 IO1
3 IO1
GR
BR
P
SB
LG
L
12 IM1
13 IM1
14 IM1
BR
Y
Y–G
Ignition Coil and Igniters
R–W
P
Y–B
L–Y
Ignition Coil and Igniters
W–R
C 2
Camshaft Timing Control Valve
2
1
G–W
G–R
27 E
4 A
21 A
8 E
9 E
10 E
11 E
24 E
16 C
15 C
VPMP
MPMP
PPMP
IGT1
IGT2
IGT3
IGT4
IGF1
OC1+
OC1–
E 5(A), E 6(B), E 7(E), E 8(D), E 9(C)
Engine Control Module
HT1B
OX1B
O1B–
E03
E04
E1
KNK1
FKNK1
G2+
NE–
NE+
21 D
29 D
2 D
7 C
7 D
1 C
1 D
28 D
27 C
24 C
25 C
R–Y
G
R
W–B
W–B
BR
B
W
G
6 IM1
3 IM1
2 IM1
(Shielded)
(Shielded)
(Shielded)
(Shielded)
(Shielded)
BR
2
4
2
1
H10
Heated Oxygen Sensor (Bank 1 Sensor 2)
HT
OX
+B
E
1
3
GR
K 1
Knock Sensor (Bank 1)
C 1
Camshaft Position Sensor
C 7(B)
Crankshaft Position Sensor
1 B
2 B
J 7
Junction Connector
A
A
A
A
A
A
A
A
(Shielded)
(Shielded)
BR
4
IM1
R
R
R
(Shielded)
GR
GR
P
P
GR
W–B
W–B
BR
EE

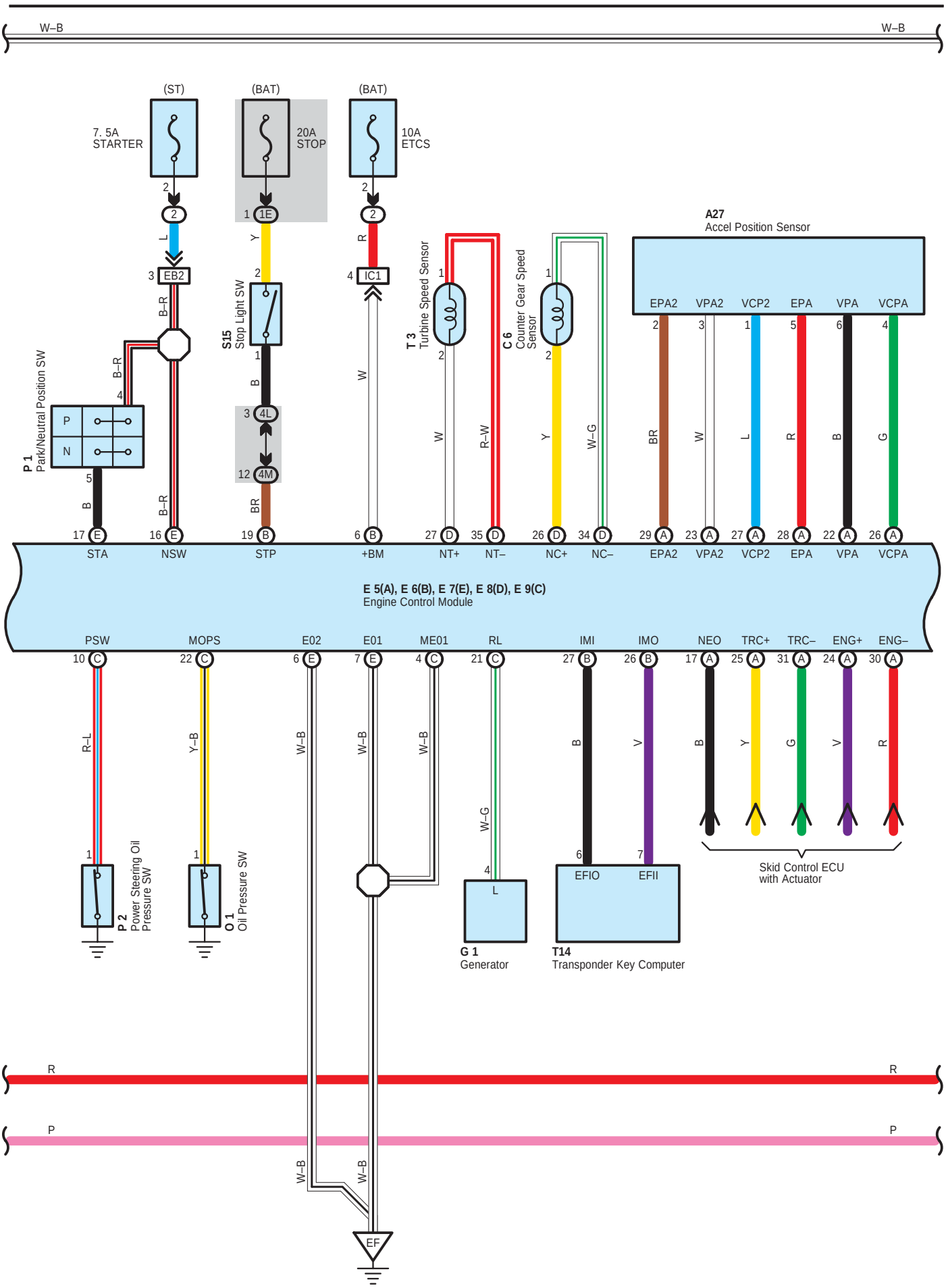
W–B
W–B
(ST)
(BAT)
(BAT)
7. 5A
STARTER
20A
STOP
10A
ETCS
2
1E
IC1
L
Y
R
EB2
B–R
S15
Stop Light SW
P 1
Park/Neutral Position SW
P
N
B
B–R
4L
4M
BR
W
T 3
Turbine Speed Sensor
R–W
C 6
Counter Gear Speed
Sensor
Y
W–G
A27
Accel Position Sensor
EPA2
VPA2
VCP2
EPA
VPA
VCPA
BR
W
L
R
B
G
STA
NSW
STP
+BM
NT+
NT–
NC+
NC–
E 5(A), E 6(B), E 7(E), E 8(D), E 9(C)
Engine Control Module
PSW
MOPS
E02
E01
ME01
RL
IMI
IMO
NEO
TRC+
TRC–
ENG+
ENG–
R–L
Y–B
W–B
W–G
B
V
P 2
Power Steering Oil
Pressure SW
O 1
Oil Pressure SW
G 1
Generator
T14
Transponder Key Computer
EFIO
EFII
Skid Control ECU
with Actuator
R
P
EF

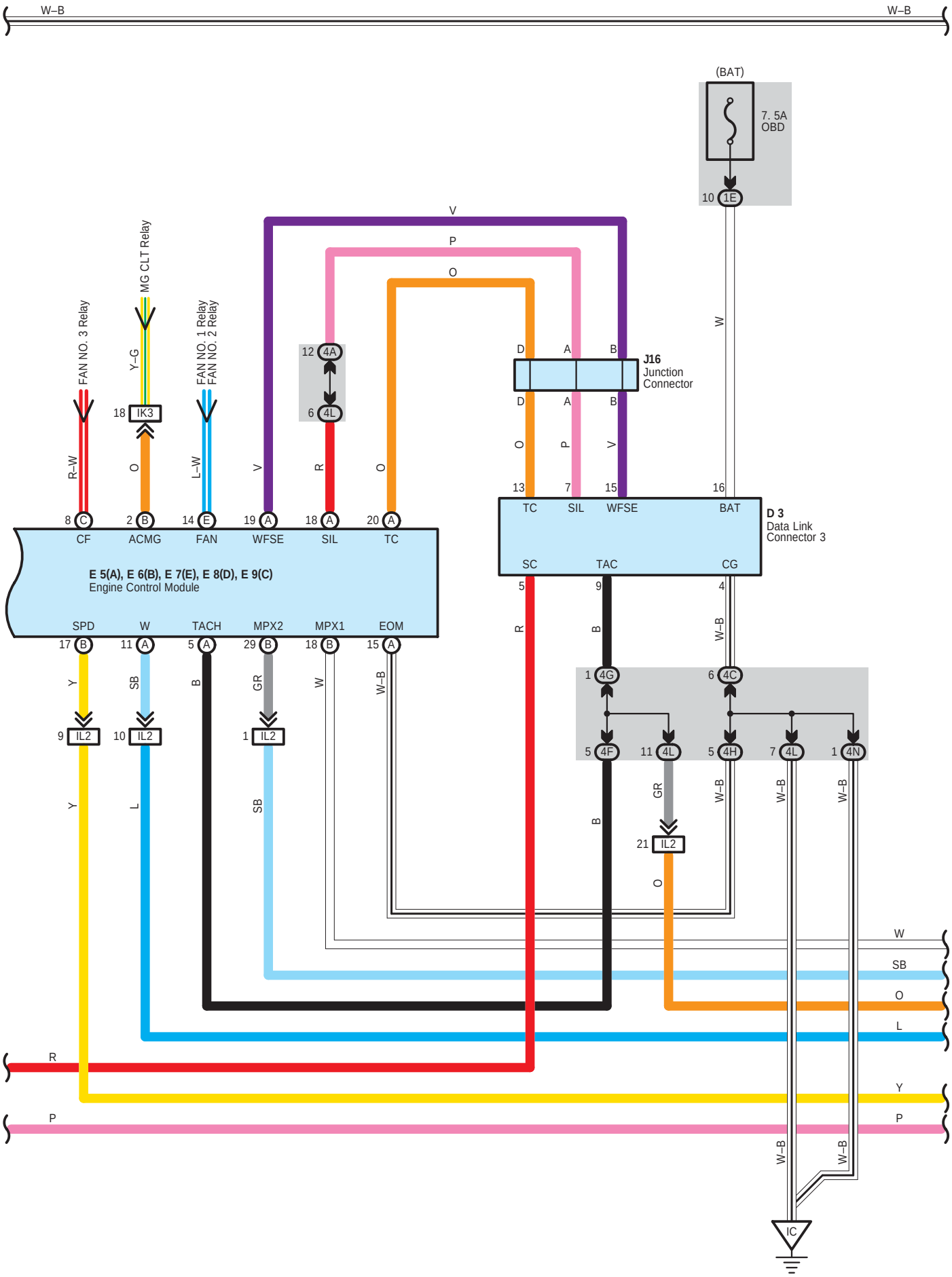
W–B
W–B
(BAT)
7. 5A
OBD
10 1E
W
V
P
O
MG CLT Relay
FAN NO. 3 Relay
FAN NO. 1 Relay
FAN NO. 2 Relay
Y–G
R–W
L–W
18 IK3
12 4A
6 4L
D A B
J16
Junction
Connector
13 7 15
TC SIL WFSE
16
BAT
D 3
Data Link
Connector 3
SC TAC CG
5 9 4
8 C
2 B
14 E
19 A
18 A
20 A
CF ACMG FAN WFSE SIL TC
E 5(A), E 6(B), E 7(E), E 8(D), E 9(C)
Engine Control Module
SPD W TACH MPX2 MPX1 EOM
17 B
11 A
5 A
29 B
18 B
15 A
9 IL2
10 IL2
1 IL2
21 IL2
1 4G
6 4C
5 4F
11 4L
5 4H
7 4L
1 4N
R
B
W–B
GR
Y
SB
L
O
P
IC

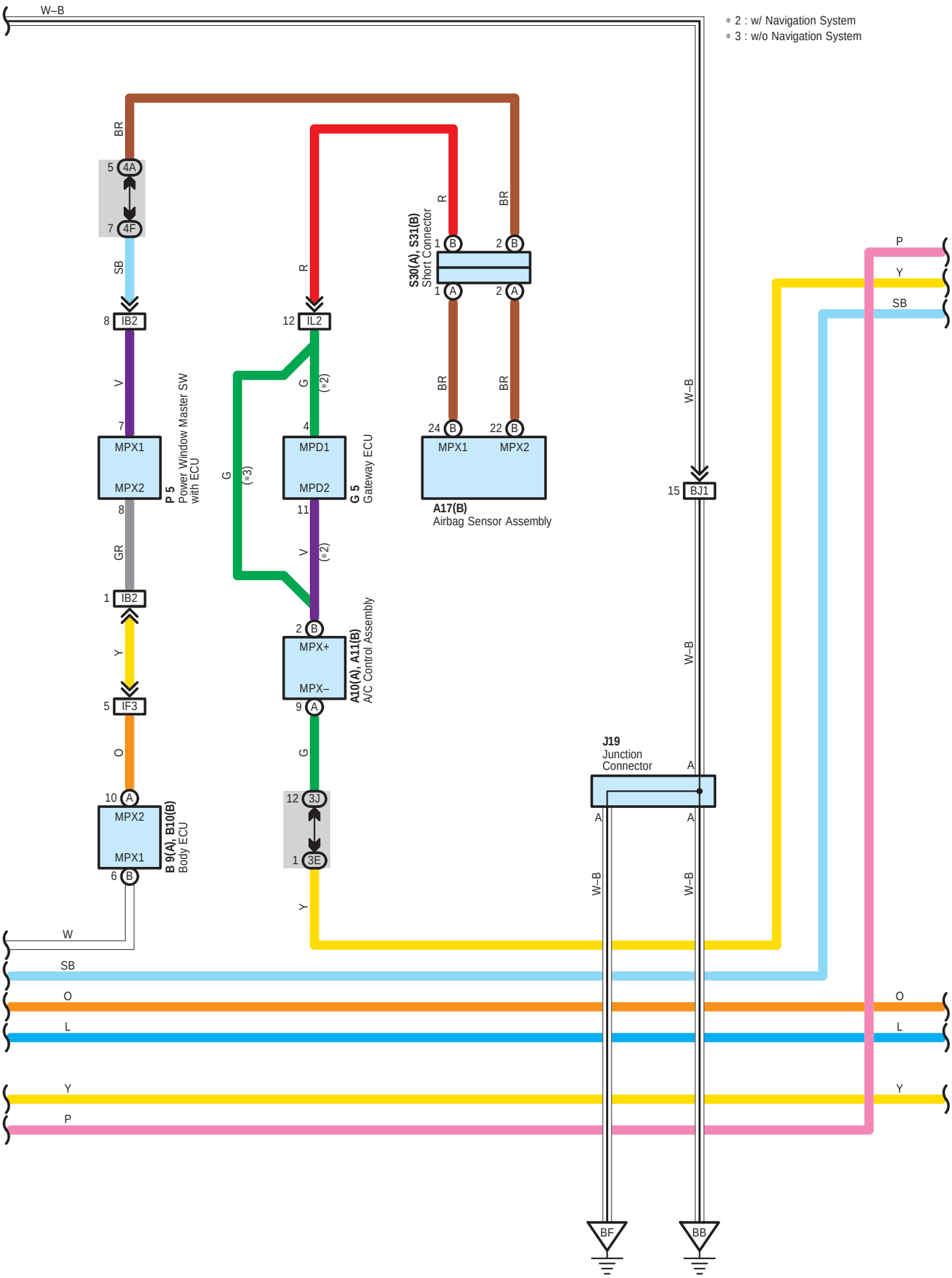
W–B
∗ 2 : w/ Navigation System
∗ 3 : w/o Navigation System
BR
5 4A
7 4F
SB
8 IB2
V
7
MPX1
MPX2
P 5
Power Window Master SW with ECU
8
GR
1 IB2
Y
5 IF3
O
10 A
MPX2
MPX1
6 B
B 9(A), B10(B)
Body ECU
W
R
12 IL2
G
(∗2)
4
MPD1
MPD2
G 5
Gateway ECU
11
V
(∗2)
G
(∗3)
2 B
MPX+
MPX–
9 A
A10(A), A11(B)
A/C Control Assembly
G
12 3J
1 3E
Y
S30(A), S31(B)
Short Connector
R
BR
1 B
2 B
1 A
2 A
BR
BR
24 B
22 B
MPX1
MPX2
A17(B)
Airbag Sensor Assembly
W–B
15 BJ1
W–B
J19
Junction
Connector
A
A
A
W–B
W–B
P
Y
SB
W
SB
O
L
Y
P
O
L
Y
BF
BB

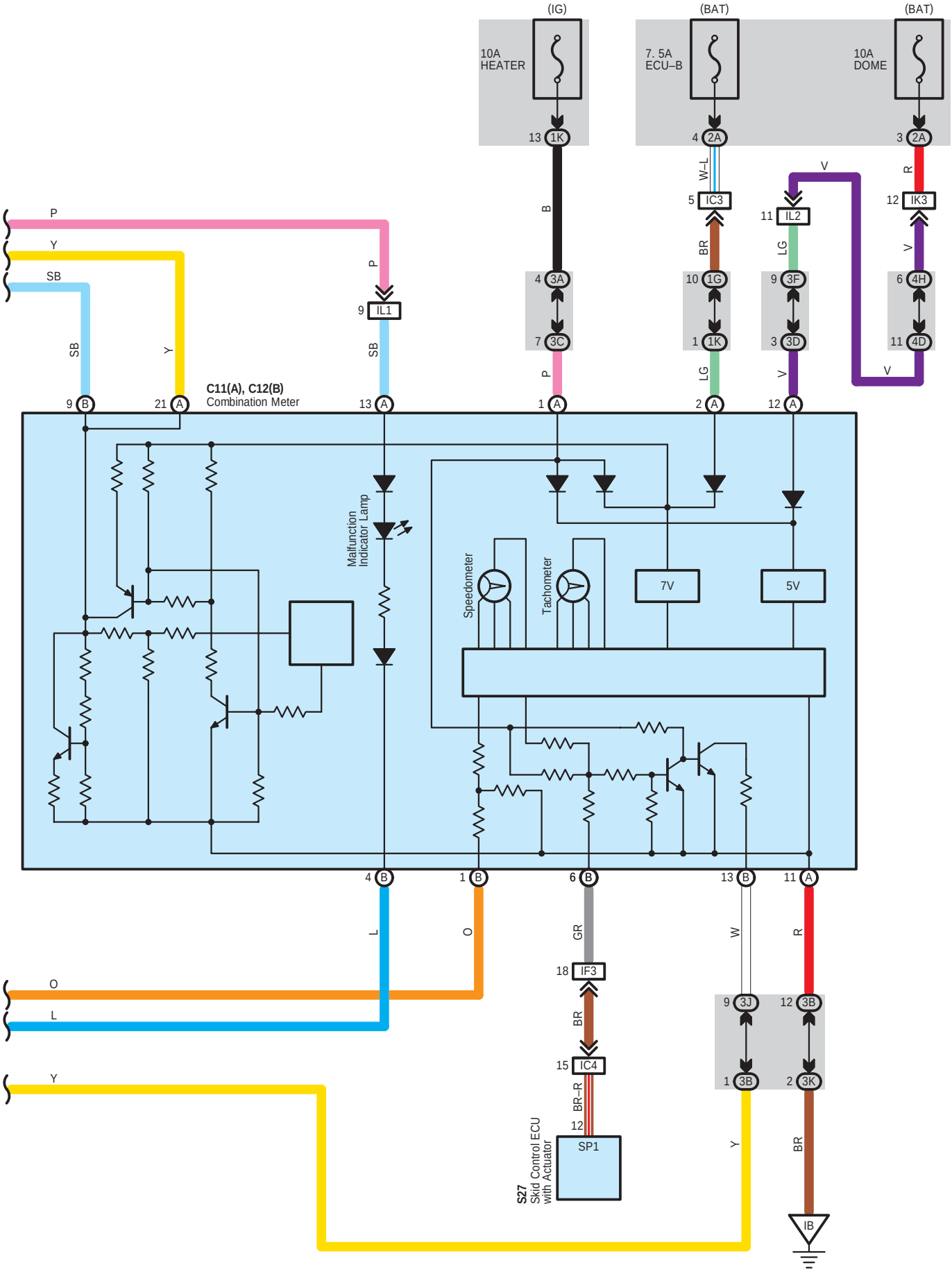
(IG)
(BAT)
(BAT)
10A HEATER
7. 5A ECU–B
10A DOME
13 1K
4 2A
3 2A
B
W–L
R
5 IC3
11 IL2
12 IK3
V
BR
LG
V
4 3A
10 1G
9 3F
6 4H
7 3C
1 1K
3 3D
11 4D
P
LG
V
V
P
Y
SB
P
9 IL1
SB
SB
Y
C11(A), C12(B)
Combination Meter
9 B
21 A
13 A
1 A
2 A
12 A
Malfunction Indicator Lamp
Speedometer
Tachometer
7V
5V
4 B
1 B
6 B
13 B
11 A
L
O
GR
W
R
O
L
18 IF3
9 3J
12 3B
BR
15 IC4
1 3B
2 3K
Y
BR–R
Y
BR
12
SP1
S27
Skid Control ECU with Actuator
IB

System Outline

The engine control system utilizes a microcomputer and maintains overall control of the engine, transmission etc. An outline of the engine control is given here.

1. Input Signals

(1) Engine coolant temp. signal circuit

The engine coolant temp. sensor detects the engine coolant temp. and has a built–in thermistor with a resistance, which varies according to the engine coolant temp.. The engine coolant temp. which is input into TERMINAL THW of the engine control module as a control signal.

(2) Intake air temp. signal circuit

The intake air temp. sensor is installed in the mass air flow meter and detects the intake air temp. which is input as a control signal to TERMINAL THA of the engine control module.

(3) Vehicle speed signal circuit

The vehicle speed signal is input from the ABS speed sensor to skid control ECU with actuator, and are sent to the engine control module through communication control.

(4) RPM signal circuit

Camshaft position and crankshaft position are detected by the camshaft position sensor and crankshaft position sensor. Camshaft position is input as a control signal to TERMINAL G2+ of the engine control module, and engine RPM is input into TERMINAL NE+.

(5) Throttle position signal circuit

The throttle position sensor detects the throttle valve opening angle as a control signal, which is input into TERMINALS VTA1 and VTA2 of the engine control module.

(6) Battery signal circuit

Voltage is constantly applied to TERMINAL BATT of the engine control module. With the ignition SW turned on, the voltage for engine control module start–up power supply is applied to TERMINALS +B and +B2 of the engine control module via the EFI relay.

The current flowing through the IGN fuse flows to TERMINAL IGSW of the engine control module.

(7) Intake air volume signal circuit

Intake air volume is detected by the mass air flow meter and the signal is input to TERMINAL VG of the engine control module as a control signal.

(8) Stop light SW signal circuit

The stop light SW is used to detect whether the vehicle is braking or not and the signal is input into TERMINAL STP of the engine control module as a control signal.

(9) Starter signal circuit

To confirm whether the engine is cranking, the voltage is applied to the starter motor during cranking is detected and the signal is input into TERMINAL STA of the engine control module as a control signal.

(10) Engine knock signal circuit

Engine knocking is detected by knock sensor and the signal is input into TERMINAL KNK1 as a control signal.

(11) Air fuel ratio signal system

The air fuel ratio is detected and input as a control signal into TERMINAL A1A+ of the engine control module.

(12) Oxygen sensor signal circuit

The oxygen density in the exhaust gases is detected and input as a control signal into TERMINAL OX1B of the engine control module. To maintain stable detection performance by the heated oxygen sensor, a heater is used for warning the sensor. The heater is also controlled by engine control module (O1B–).

(13) Fuel cut in a collision

The system receives the collision signal from center airbag sensor assembly in the vehicle has a collision and stops the fuel pump operation on the side of the engine control module.

2. Control System

* SFI system
  The SFI system monitors the engine condition through the signals input from each sensor (Input signals from (1) to (12) etc.) to the engine control module. And the control signal is output to TERMINALS #1, #2, #3 and #4 of the engine control module to operate the injector (Inject the fuel). The SFI system controls the fuel injection operation by the engine control module in response to the driving conditions.
* ESA system
  The ESA system monitors the engine condition through the signals input to the engine control module from each sensor (Input signals from (1) to (12) etc.). The best ignition timing is decided according to this data and the memorized data in the engine control module and the control signal is output to TERMINALS IGT1, IGT2, IGT3 and IGT4. This signal controls the igniter to provide the best ignition timing for the driving conditions.

3. Diagnosis System

With the diagnosis system, when there is a malfunction in the engine control module signal system, the malfunctioning system is recorded in the memory. The malfunctioning system can be found by reading the code displayed by the malfunction indicator lamp.

4. Fail–safe System

When a malfunction has occurred in any system, if there is a possibility of engine trouble being caused by continued control based on the signals from that system, the fail–safe system either controls the system by using data (Standard values) recorded in the engine control module memory or else stops the engine.

○ : Parts Location

Code	See Page	Code	See Page	Code	See Page
A6	40 (2AZ–FE)	E6 B	42	K1	41 (2AZ–FE)
A10 A	42	E7 E	42	M1	41 (2AZ–FE)
A11 B	42	E8 D	42	O1	41 (2AZ–FE)
A17 B	42	E9 C	42	P1	41 (2AZ–FE)
A27	42	F12	44	P2	41 (2AZ–FE)
B9 A	42	G1	40 (2AZ–FE)	P5	44
B10 B	42	G5	43	S15	43
C1	40 (2AZ–FE)	H10	43	S27	41 (2AZ–FE)
C2	40 (2AZ–FE)	I8 B	41 (2AZ–FE)	S28 A	43
C6	40 (2AZ–FE)	I9 B	41 (2AZ–FE)	S29 B	43
C7 B	40 (2AZ–FE)	I10 B	41 (2AZ–FE)	S30 A	43
C11 A	42	I11 B	41 (2AZ–FE)	S31 B	43
C12 B	42	J2	41 (2AZ–FE)	T3	41 (2AZ–FE)
C17	44	J6	43	T13	41 (2AZ–FE)
D3	42	J7	43	T14	43
E2 B	40 (2AZ–FE)	J16	43	V16	41 (2AZ–FE)
E5 A	42	J19	44	V15	45

▭ : Relay Blocks

Code	See Page	Relay Blocks (Relay Block Location)
1	24	R/B No.1 (Lower Finish Panel)
2	22	Engine Room R/B (Engine Compartment Left)

: Junction Block and Wire Harness Connector

Code	See Page	Junction Block and Wire Harness (Connector Location)
1E	29	Cowl Wire and Instrument Panel J/B (Lower Finish Panel)
1G		
1K	28	Instrument Panel Wire and Instrument Panel J/B (Lower Finish Panel)
2A	27	Engine Room Main Wire and Engine Room J/B (Engine Compartment Left)
2B		
2D		
2F		
3A	30	Instrument Panel Wire and Center J/B (Behind the Instrument Panel Center)
3B		
3C		
3D		
3E		
3F		
3J	31	
3K		
4A	33	Cowl Wire and Passenger Side J/B (Right Side of Grove Box)
4C		
4D		
4E		
4F		
4G		
4H		
4L	32	
4M		
4N		

: Connector Joining Wire Harness and Wire Harness

Code	See Page	Joining Wire Harness and Wire Harness (Connector Location)
EB1	49 (2AZ–FE)	Engine Wire and Engine Room Main Wire (Front Side of Engine Room R/B)
EB2		
IA1	50	Cowl Wire and Floor No.2 Wire (Left Kick Panel)
IA2		
IB2	50	Front Door LH Wire and Cowl Wire (Left Kick Panel)
IC1	50	Engine Room Main Wire and Cowl Wire (Left Cowl Side Panel)
IC2		
IC3		
IC4		
IF3	50	Instrument Panel Wire and Cowl Wire (Right Side of Instrument Panel J/B)
IK2	51	Engine Room Main Wire and Cowl Wire (Right Cowl Side Panel)
IK3		
IL1	51	Instrument Panel Wire and Cowl Wire (Upper Side of Passenger Side J/B)
IL2		
IM1	51	Engine Wire and Cowl Wire (Right Kick Panel)
IO1	51	Cowl Wire and Floor Wire (Right Kick Panel)
BJ1	52	Floor Wire and Floor No.4 Wire (Right Side of Rear Floor Crossmember)

▽ : **Ground Points**

Code	See Page	Ground Points Location
EE	49 (2AZ–FE)	Intake Side of Cylinder Block
EF	49 (2AZ–FE)	Left Side of Cylinder Block
EH	49 (2AZ–FE)	Under the Left Headlight
IB	50	Right Instrument Panel Brace
IC	50	Right Cowl Side Panel
BB	52	Right Center Pillar
BC	52	Left Side of Rear Cross Member
BF	52	Near the Rear Side Marker Light RH

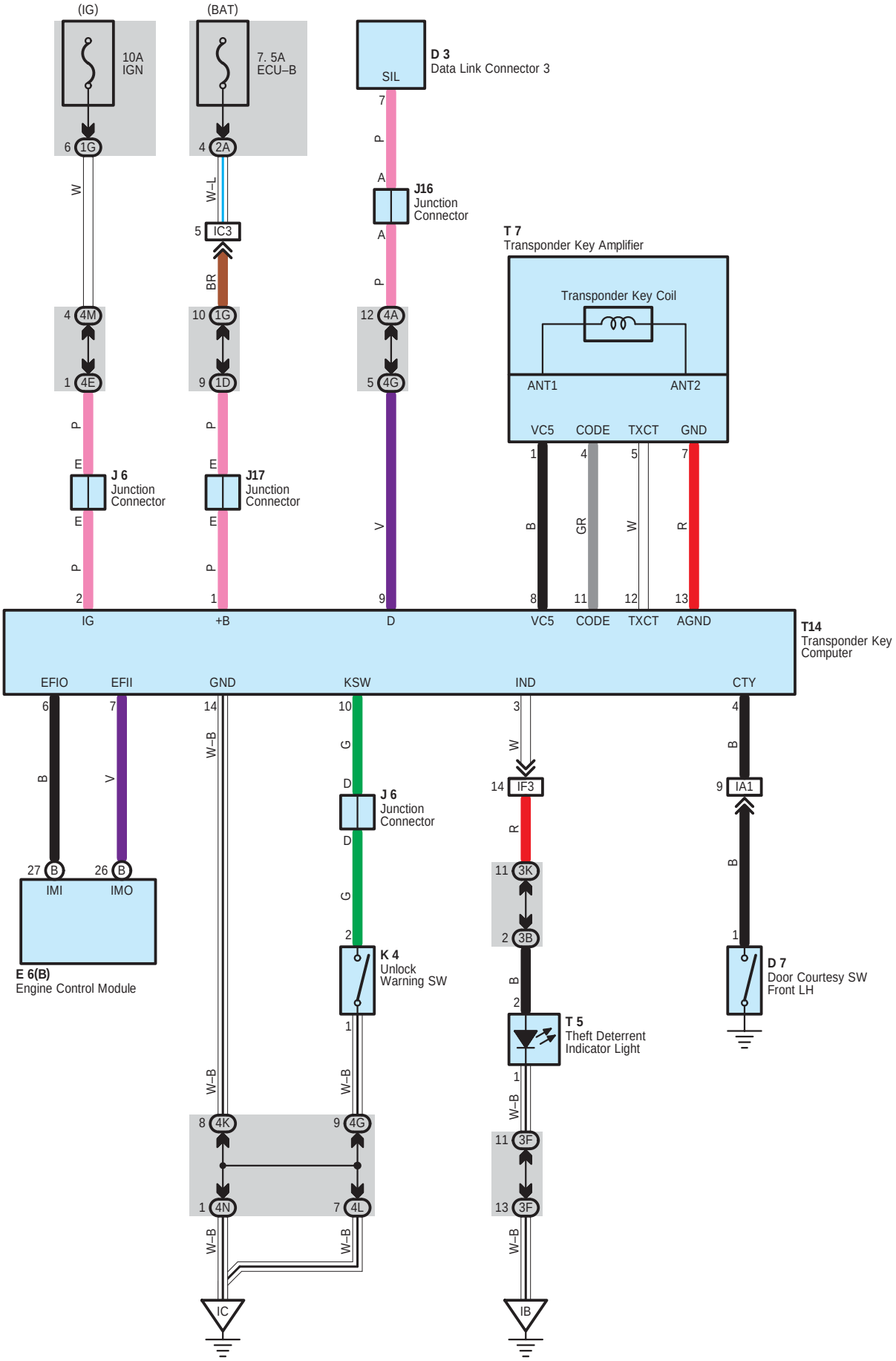
(IG)
(BAT)
10A
IGN
7. 5A
ECU–B
SIL
D 3
Data Link Connector 3
6 1G
4 2A
7
W
W–L
P
A
J16
Junction
Connector
5 IC3
BR
A
P
T 7
Transponder Key Amplifier
Transponder Key Coil
4 4M
10 1G
12 4A
ANT1
ANT2
1 4E
9 1D
5 4G
VC5
CODE
TXCT
GND
P
E
J 6
Junction
Connector
J17
Junction
Connector
V
1
4
5
7
B
GR
W
R
E
P
2
1
9
8
11
12
13
IG
+B
D
VC5
CODE
TXCT
AGND
T14
Transponder Key
Computer
EFIO
EFII
GND
KSW
IND
CTY
6
7
14
10
3
4
B
V
W–B
G
W
B
D
14 IF3
9 IA1
R
B
27 B
26 B
IMI
IMO
J 6
Junction
Connector
11 3K
2 3B
D
G
2
K 4
Unlock
Warning SW
B
2
1
T 5
Theft Deterrent
Indicator Light
D 7
Door Courtesy SW
Front LH
W–B
1
8 4K
9 4G
11 3F
1 4N
7 4L
13 3F
W–B
W–B
W–B
E 6(B)
Engine Control Module
IC
IB

: Parts Location

Code	See Page	Code	See Page	Code	See Page
D3	42	J16	43	T7	43
D7	44	J17	43	T14	43
E6 B	42	K4	43		
J6	43	T5	43		

: Junction Block and Wire Harness Connector

Code	See Page	Junction Block and Wire Harness (Connector Location)
1D	29	Cowl Wire and Instrument Panel J/B (Lower Finish Panel)
1G		
2A	27	Engine Room Main Wire and Engine Room J/B (Engine Compartment Left)
3B	30	Instrument Panel Wire and Center J/B (Behind the Instrument Panel Center)
3F		
3K	31	
4A	33	Cowl Wire and Passenger Side J/B (Right Side of Grove Box)
4E		
4G		
4K	32	
4L		
4M		
4N		

: Connector Joining Wire Harness and Wire Harness

Code	See Page	Joining Wire Harness and Wire Harness (Connector Location)
IA1	50	Cowl Wire and Floor No.2 Wire (Left Kick Panel)
IC3	50	Engine Room Main Wire and Cowl Wire (Left Cowl Side Panel)
IF3	50	Instrument Panel Wire and Cowl Wire (Right Side of Instrument Panel J/B)

: Ground Points

Code	See Page	Ground Points Location
IB	50	Right Instrument Panel Brace
IC	50	Right Cowl Side Panel

ECT and A/T Indicator for 3MZ–FE

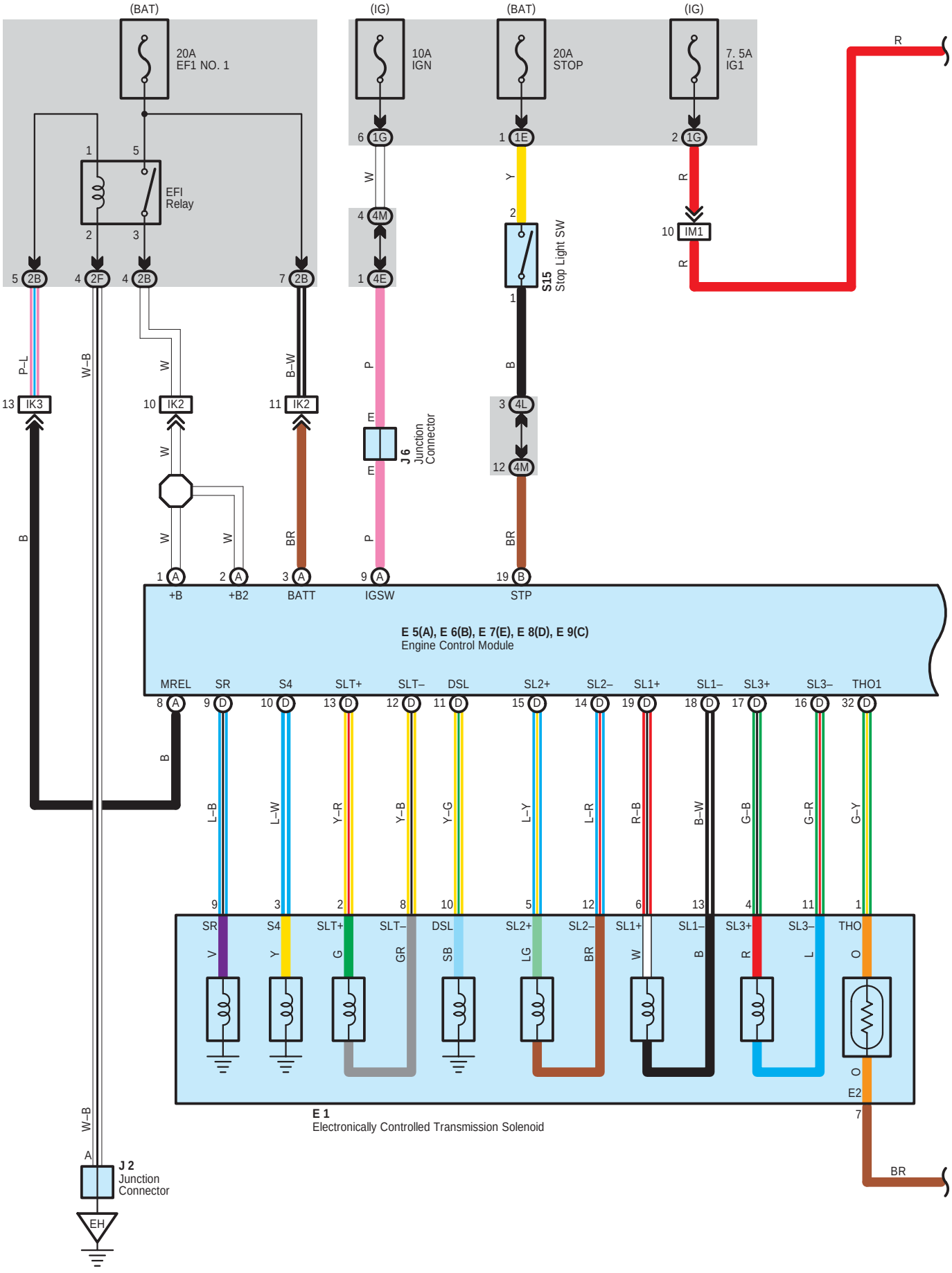

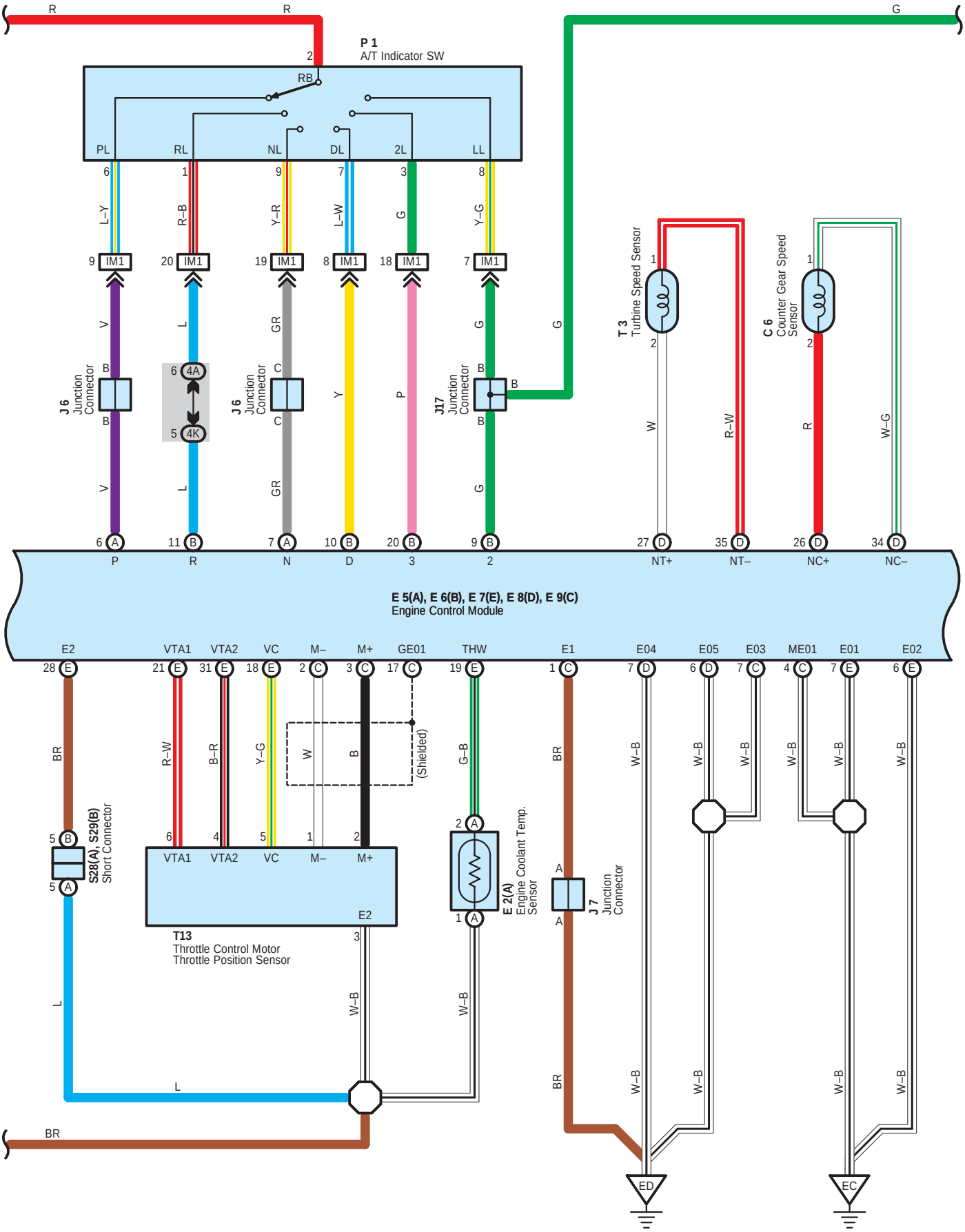
P 1
A/T Indicator SW
RB
PL
RL
NL
DL
2L
LL
J 6
Junction Connector
J17
Junction Connector
T 3
Turbine Speed Sensor
C 6
Counter Gear Speed Sensor
E 5(A), E 6(B), E 7(E), E 8(D), E 9(C)
Engine Control Module
P
R
N
D
3
2
NT+
NT–
NC+
NC–
S28(A), S29(B)
Short Connector
T13
Throttle Control Motor
Throttle Position Sensor
E 2(A)
Engine Coolant Temp. Sensor
J 7
Junction Connector
(Shielded)
ED
EC

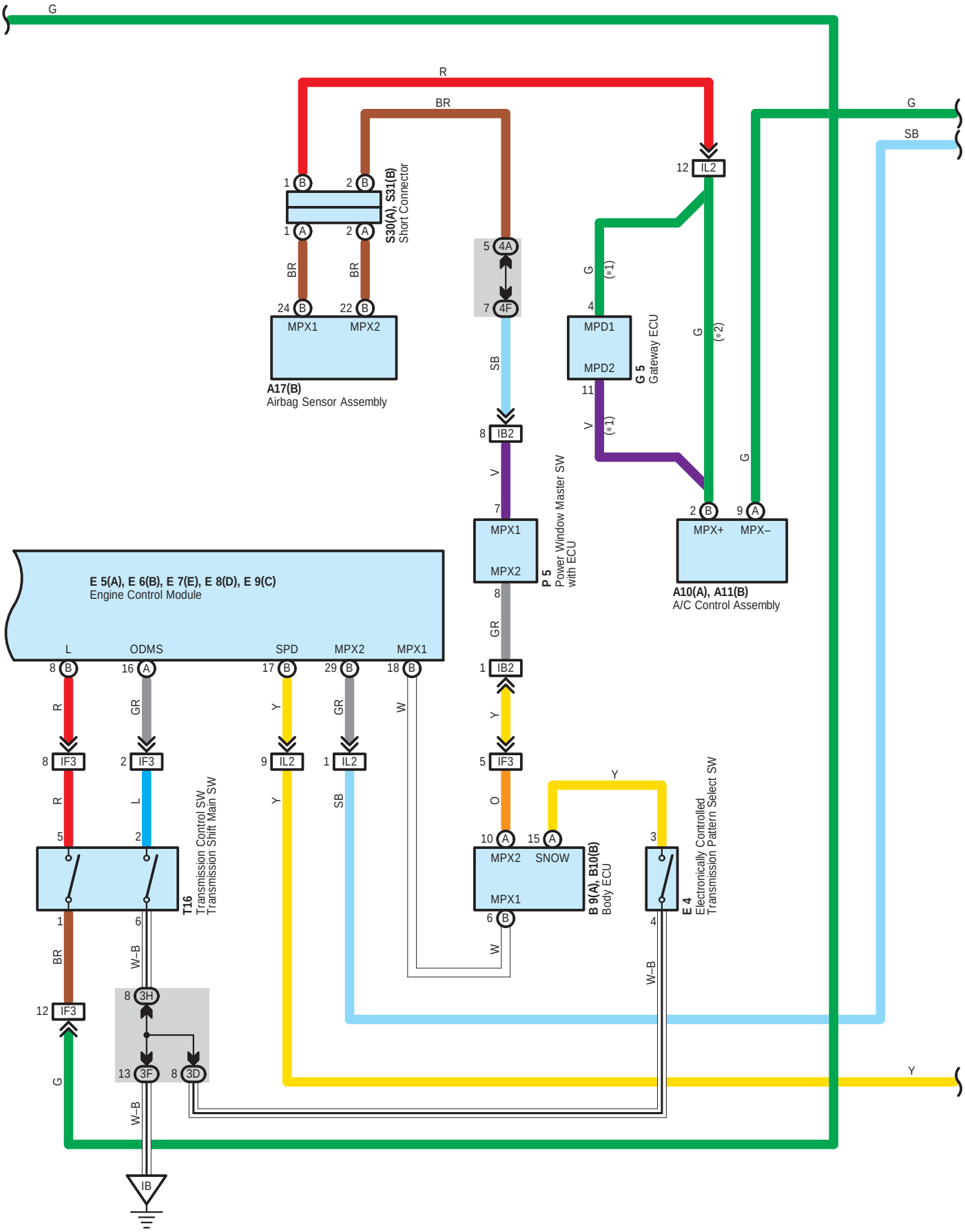
G
R
BR
G
SB
12 IL2
1 B
2 B
1 A
2 A
S30(A), S31(B)
Short Connector
5 4A
7 4F
24 B
22 B
MPX1
MPX2
A17(B)
Airbag Sensor Assembly
SB
8 IB2
V
7
MPX1
MPX2
P 5
Power Window Master SW
with ECU
8
GR
1 IB2
Y
5 IF3
O
10 A
15 A
MPX2
SNOW
MPX1
6 B
B 9(A), B10(B)
Body ECU
W
Y
3
E 4
Electronically Controlled
Transmission Pattern Select SW
4
W–B
G (*1)
4
MPD1
MPD2
11
V (*1)
G 5
Gateway ECU
G (*2)
G
2 B
9 A
MPX+
MPX–
A10(A), A11(B)
A/C Control Assembly
E 5(A), E 6(B), E 7(E), E 8(D), E 9(C)
Engine Control Module
L
ODMS
SPD
MPX2
MPX1
8 B
16 A
17 B
29 B
18 B
R
GR
Y
GR
W
8 IF3
2 IF3
9 IL2
1 IL2
R
L
Y
SB
5
2
1
6
BR
W–B
T16
Transmission Control SW
Transmission Shift Main SW
12 IF3
8 3H
13 3F
8 3D
G
W–B
IB
Y

∗ 1 : w/ Navigation System
∗ 2 : w/o Navigation System

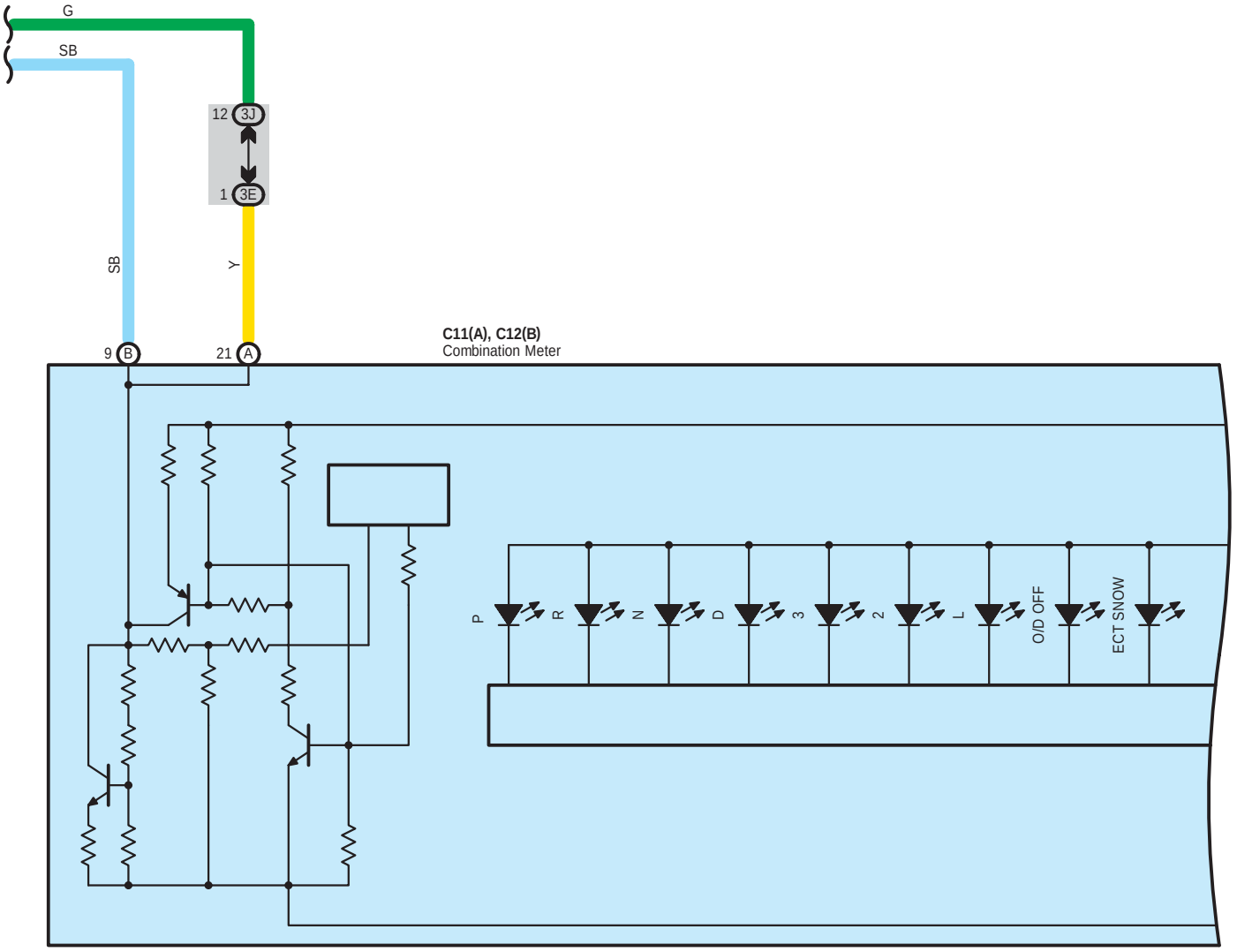



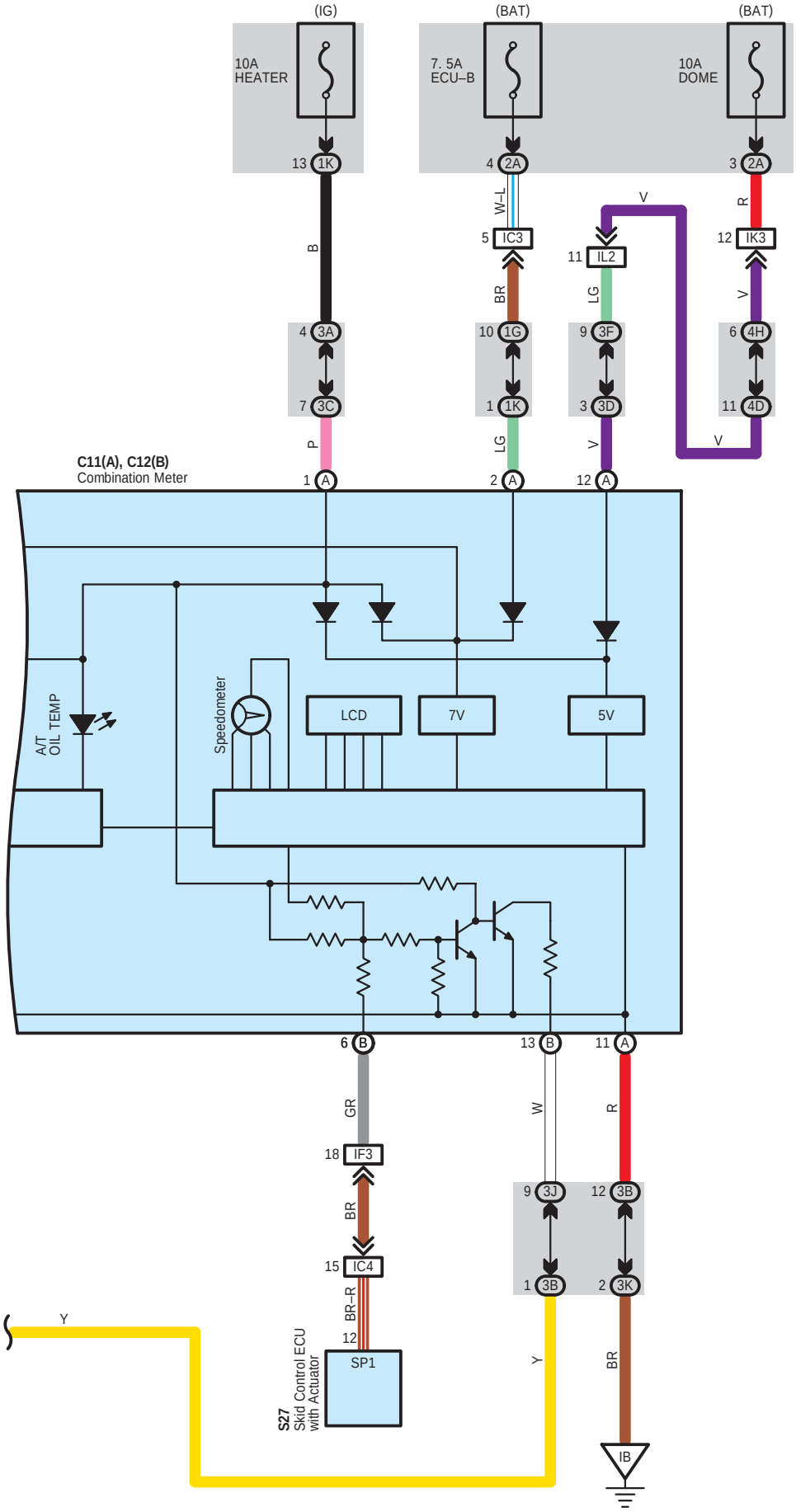
(IG)
(BAT)
(BAT)
10A
HEATER
7. 5A
ECU–B
10A
DOME
13 1K
4 2A
3 2A
B
W–L
R
5 IC3
12 IK3
V
11 IL2
LG
BR
V
4 3A
10 1G
9 3F
6 4H
7 3C
1 1K
3 3D
11 4D
P
LG
V
V
C11(A), C12(B)
Combination Meter
1 A
2 A
12 A
A/T
OIL TEMP
Speedometer
LCD
7V
5V
6 B
13 B
11 A
GR
W
R
18 IF3
9 3J
12 3B
BR
15 IC4
1 3B
2 3K
BR–R
Y
Y
BR
12
SP1
S27
Skid Control ECU
with Actuator
IB

System Outline

Previous automatic transaxle have selected each gear shift using mechanically controlled throttle hydraulic pressure, governor hydraulic pressure and lock–up hydraulic pressure. The electronically controlled transmission, however, electrically controls the line pressure, throttle pressure, lock–up pressure and accumulator pressure etc. through the solenoid valve. The electronically controlled transmission is a system which precisely controls gear shift timing and lock–up timing in response to the vehicle's driving conditions and the engine condition detected by various sensors. It makes smooth driving possible by shift selection for each gear which is the most appropriate to the driving conditions at that time, and by preventing downing, squat and gear shift shock when starting off.

1. Gear Shift Operation

During driving the engine warm up condition signal is input from engine coolant temp. sensor to TERMINAL THW of the engine control module, and the vehicle speed signal is input from the ABS speed sensor to skid control ECU, and are sent to the engine control module through communication control. At the same time, the throttle valve opening signal is sent from the throttle position sensor to the TERMINALS VTA1 and VTA2 of the engine control module, as the throttle angle signal.

2. Lock–Up Operation

When the engine control module decides based on each signal that the lock–up condition has been met, the current flows through TERMINAL DSL of the engine control module to TERMINAL 10 of the electronically controlled transmission solenoid to GROUND.

3. Stop Light SW Circuit

If the brake pedal is depressed (Stop light SW on) when driving in lock–up condition, a signal is input to TERMINAL STP of the engine control module. The engine control module operates and cuts the current to the solenoid to release lock–up.

4. Overdrive Circuit

* O/D main SW on
  When the O/D main SW is turned on, a signal is input to TERMINAL ODMS of the engine control module and engine control module operation causes gear shift when the conditions for overdrive are met.
* O/D main SW off
  When the O/D main SW is turned off, a signal is input into TERMINAL ODMS of the engine control module, and turns on the O/D off indicator light. This activates the ECU, and the transmission system is controlled not to shift to overdrive.

○ : Parts Location

Code	See Page	Code	See Page	Code	See Page
A10 A	42	E5 A	42	P5	44
A11 B	42	E6 B	42	S15	43
A17 B	42	E7 E	42	S27	39 (3MZ–FE)
B9 A	42	E8 D	42	S28 A	43
B10 B	42	E9 C	42	S29 B	43
C6	38 (3MZ–FE)	G5	43	S30 A	43
C11 A	42	J2	39 (3MZ–FE)	S31 B	43
C12 B	42	J6	43	T3	39 (3MZ–FE)
E1	38 (3MZ–FE)	J7	43	T13	39 (3MZ–FE)
E2 A	38 (3MZ–FE)	J17	43	T16	43
E4	42	P1	39 (3MZ–FE)		

: Junction Block and Wire Harness Connector

Code	See Page	Junction Block and Wire Harness (Connector Location)
1E	29	Cowl Wire and Instrument Panel J/B (Lower Finish Panel)
1G		
1K	28	Instrument Panel Wire and Instrument Panel J/B (Lower Finish Panel)
2A	27	Engine Room Main Wire and Engine Room J/B (Engine Compartment Left)
2B		
2F		
3A	30	Instrument Panel Wire and Center J/B (Behind the Instrument Panel Center)
3B		
3C		
3D		
3E		
3F		
3H	31	
3J		
3K		
4A	33	Cowl Wire and Passenger Side J/B (Right Side of Grove Box)
4D		
4E		
4F		
4H		
4K	32	
4L		
4M		

: Connector Joining Wire Harness and Wire Harness

Code	See Page	Joining Wire Harness and Wire Harness (Connector Location)
IB2	50	Front Door LH Wire and Cowl Wire (Left Kick Panel)
IC3	50	Engine Room Main Wire and Cowl Wire (Left Cowl Side Panel)
IC4		
IF3	50	Instrument Panel Wire and Cowl Wire (Right Side of Instrument Panel J/B)
IK2	51	Engine Room Main Wire and Cowl Wire (Right Cowl Side Panel)
IK3		
IL2	51	Instrument Panel Wire and Cowl Wire (Upper Side of Passenger Side J/B)
IM1	51	Engine Wire and Cowl Wire (Right Kick Panel)

: Ground Points

Code	See Page	Ground Points Location
EC	48 (3MZ–FE)	Left Side of Cylinder Head
ED	48 (3MZ–FE)	Rear Side of Cylinder Head
EH	48 (3MZ–FE)	Under the Left Headlight
IB	50	Right Instrument Panel Brace

ECT and A/T Indicator for 2AZ–FE

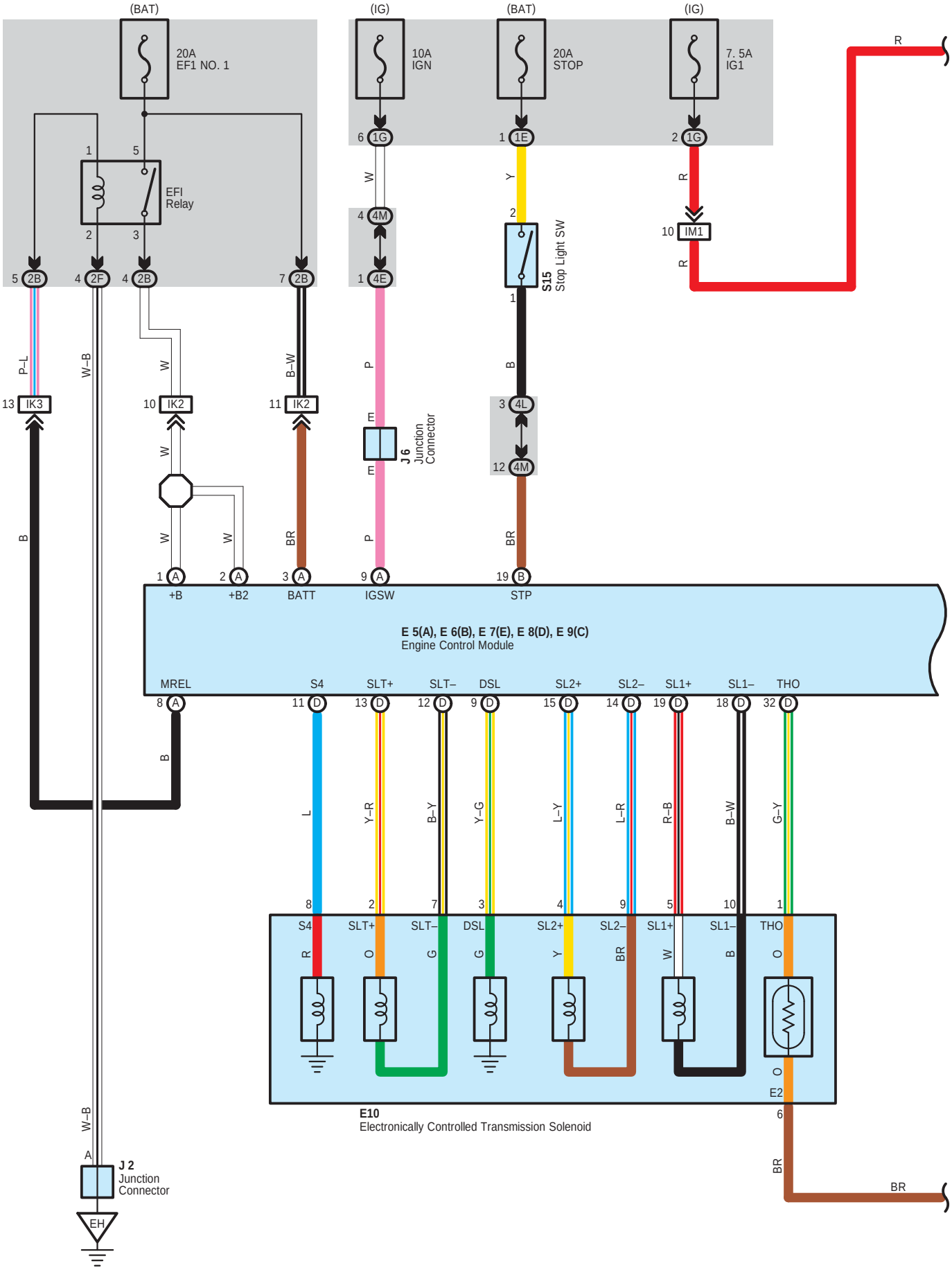

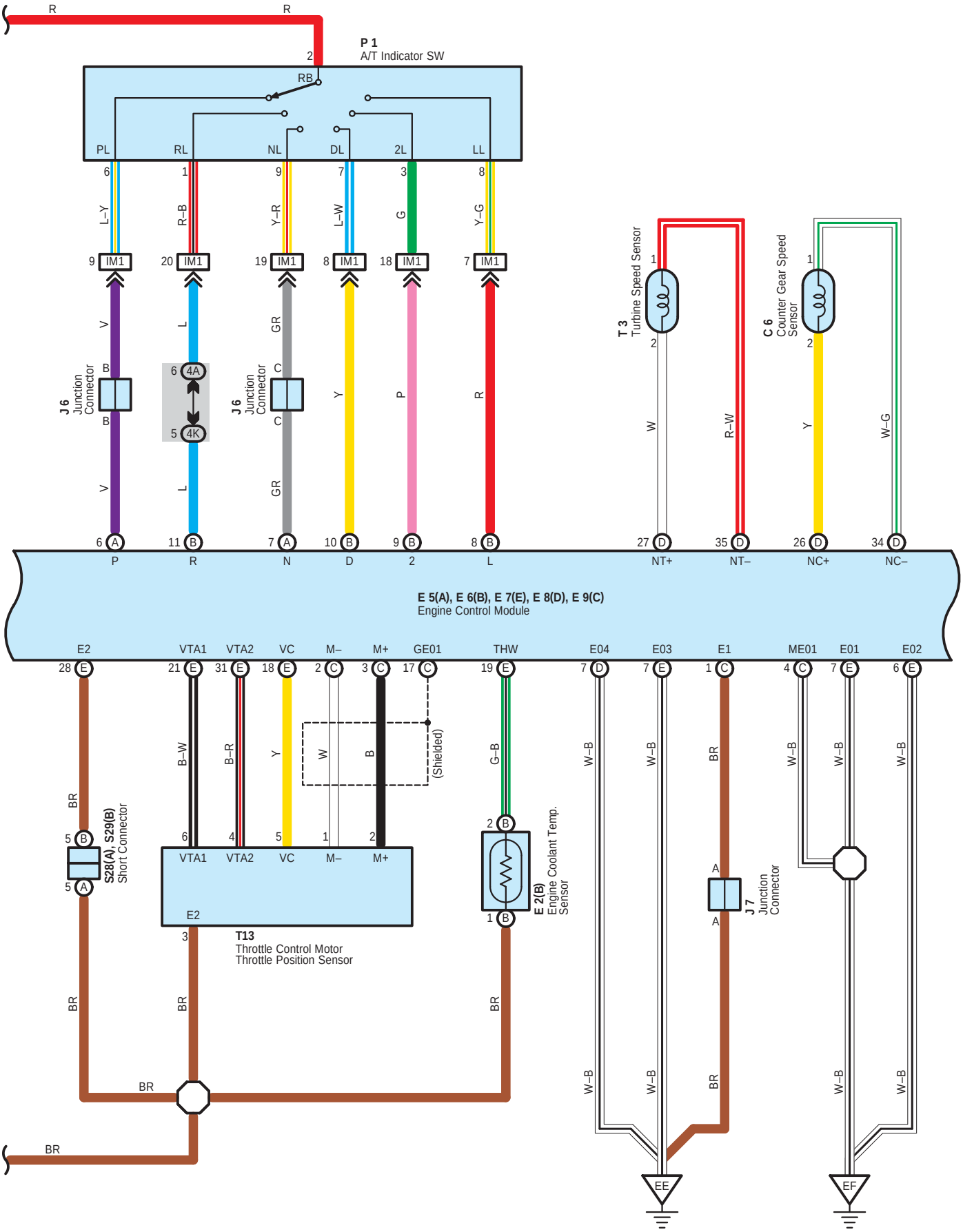
P 1
A/T Indicator SW
PL
RL
NL
DL
2L
LL
RB
IM1
J 6
Junction Connector
T 3
Turbine Speed Sensor
C 6
Counter Gear Speed Sensor
P
R
N
D
2
L
NT+
NT–
NC+
NC–
E 5(A), E 6(B), E 7(E), E 8(D), E 9(C)
Engine Control Module
E2
VTA1
VTA2
VC
M–
M+
GE01
THW
E04
E03
E1
ME01
E01
E02
S28(A), S29(B)
Short Connector
T13
Throttle Control Motor
Throttle Position Sensor
E 2(B)
Engine Coolant Temp. Sensor
J 7
Junction Connector
(Shielded)
EE
EF

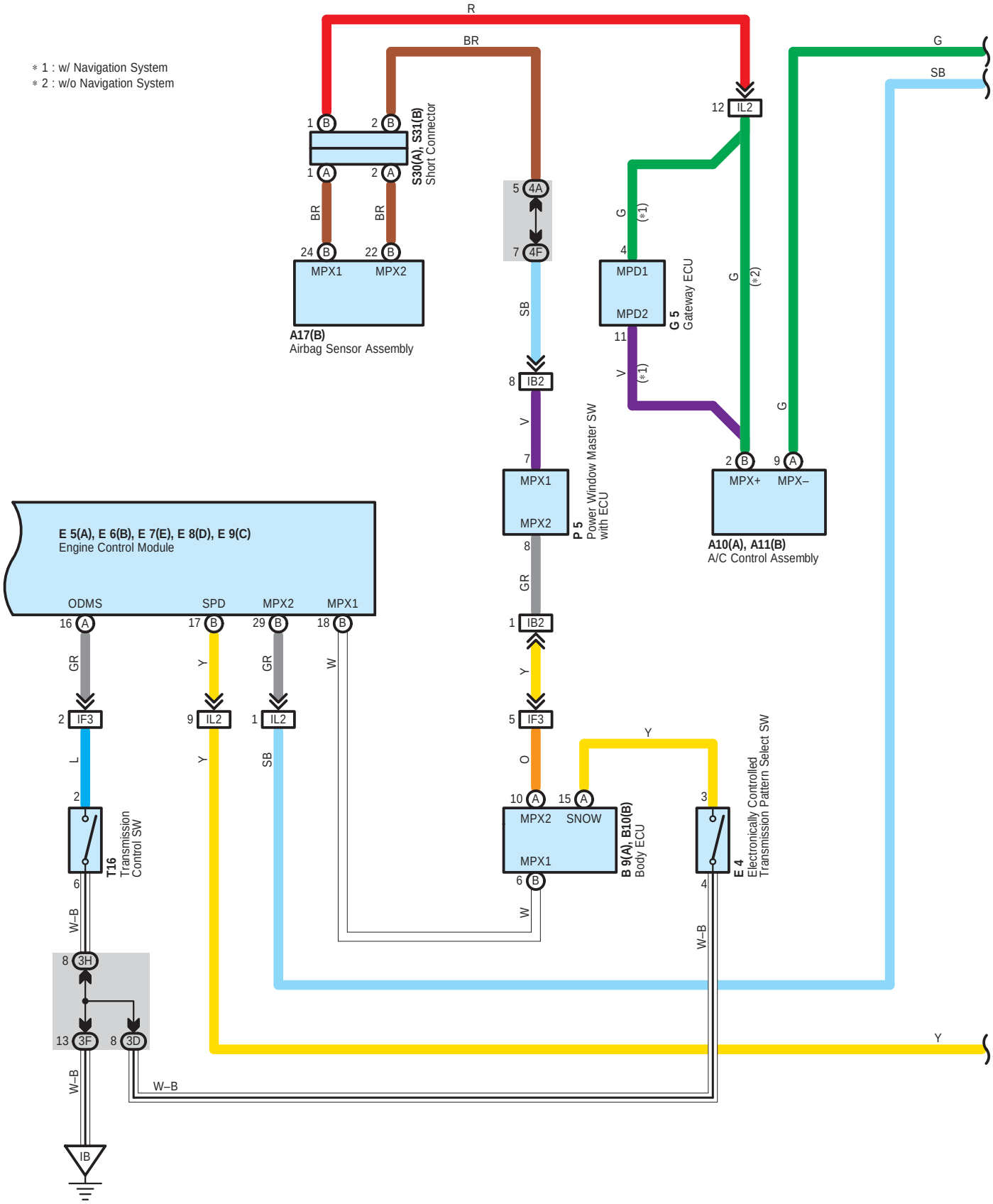
∗ 1 : w/ Navigation System
∗ 2 : w/o Navigation System
R
BR
G
SB
S30(A), S31(B)
Short Connector
A17(B)
Airbag Sensor Assembly
MPX1
MPX2
MPD1
MPD2
G 5
Gateway ECU
(*1)
(*2)
IL2
IB2
IF3
4A
4F
P 5
Power Window Master SW
with ECU
MPX+
MPX–
A10(A), A11(B)
A/C Control Assembly
E 5(A), E 6(B), E 7(E), E 8(D), E 9(C)
Engine Control Module
ODMS
SPD
MPX2
MPX1
T16
Transmission
Control SW
3H
3F
3D
IB
B 9(A), B10(B)
Body ECU
SNOW
E 4
Electronically Controlled
Transmission Pattern Select SW
GR
Y
L
O
W
W–B

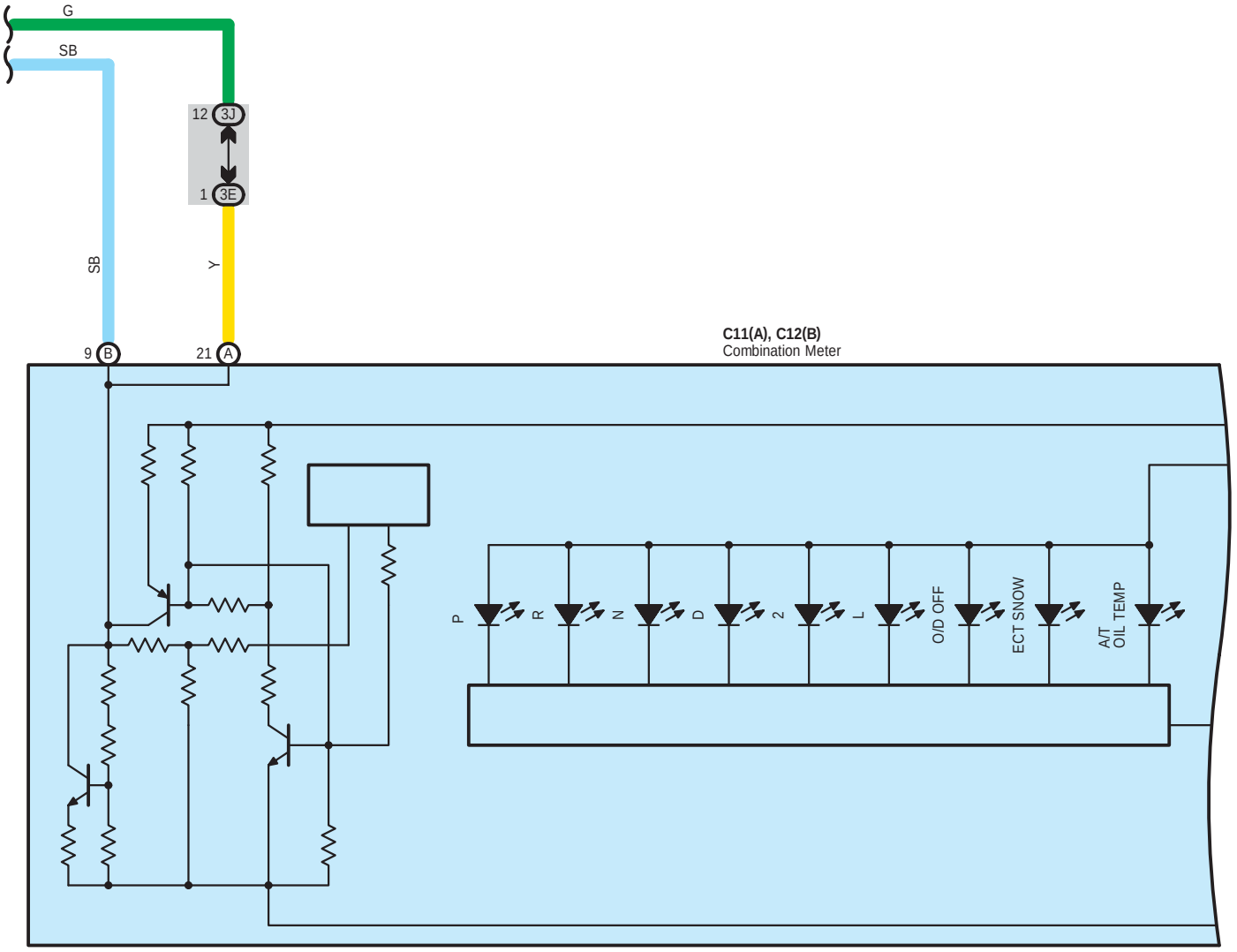
G
SB
12
3J
1
3E
SB
Y
9
B
21
A
C11(A), C12(B)
Combination Meter
P
R
N
D
2
L
O/D OFF
ECT SNOW
A/T
OIL TEMP


Y
Y

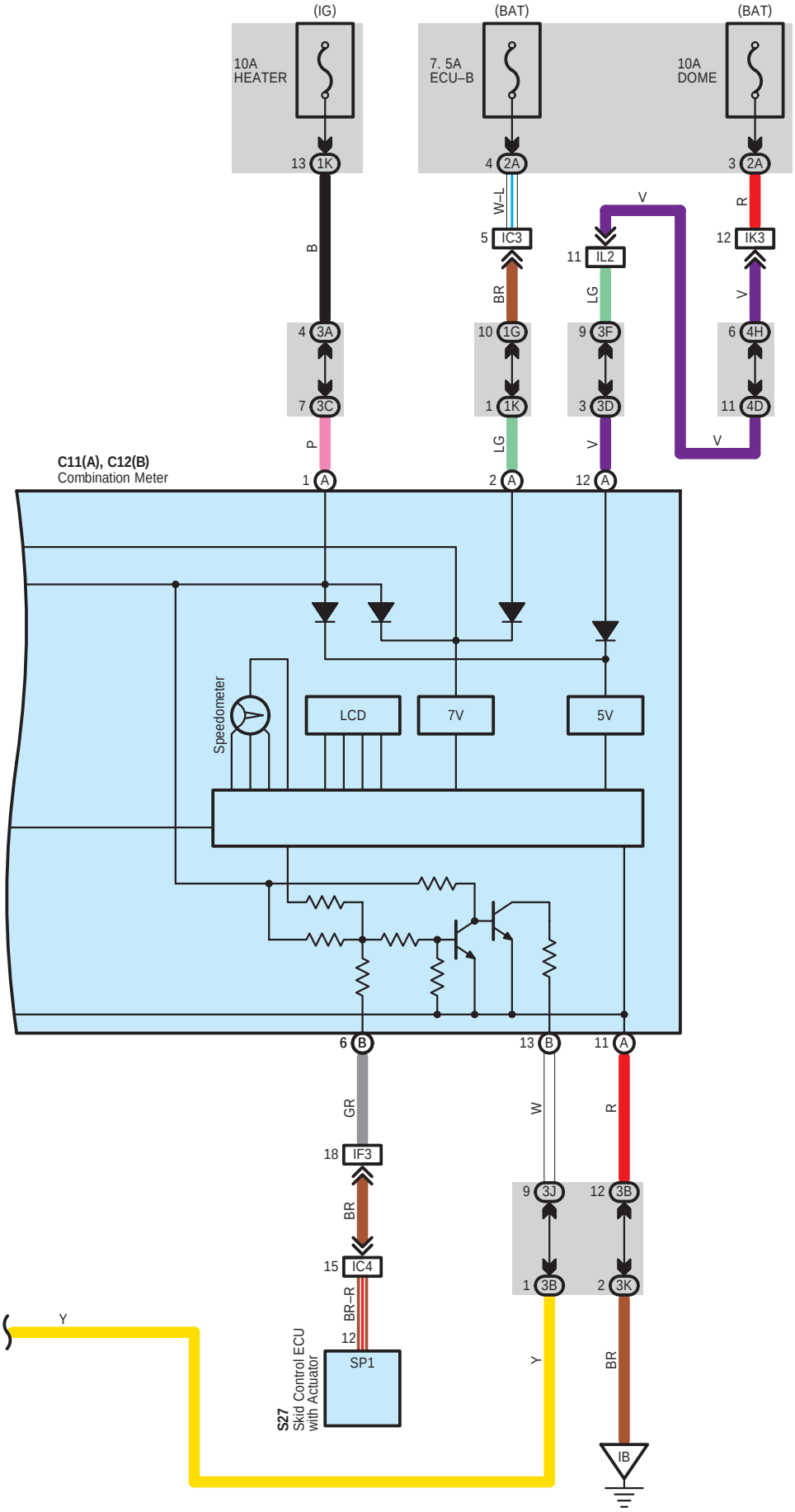
(IG)
(BAT)
(BAT)
10A
HEATER
7. 5A
ECU–B
10A
DOME
13 1K
4 2A
3 2A
B
W–L
R
5 IC3
12 IK3
V
11 IL2
LG
BR
V
4 3A
10 1G
9 3F
6 4H
7 3C
1 1K
3 3D
11 4D
P
LG
V
V
C11(A), C12(B)
Combination Meter
1 A
2 A
12 A
Speedometer
LCD
7V
5V
6 B
13 B
11 A
GR
W
R
18 IF3
9 3J
12 3B
BR
15 IC4
1 3B
2 3K
BR–R
Y
Y
BR
12
SP1
S27
Skid Control ECU
with Actuator
IB

System Outline

Previous automatic transaxle have selected each gear shift using mechanically controlled throttle hydraulic pressure, governor hydraulic pressure and lock–up hydraulic pressure. The electronically controlled transmission, however, electrically controls the line pressure, throttle pressure, lock–up pressure and accumulator pressure etc. through the solenoid valve. The electronically controlled transmission is a system which precisely controls gear shift timing and lock–up timing in response to the vehicle's driving conditions and the engine condition detected by various sensors. It makes smooth driving possible by shift selection for each gear which is the most appropriate to the driving conditions at that time, and by preventing downing, squat and gear shift shock when starting off.

1. Gear Shift Operation

During driving the engine warm up condition signal is input from engine coolant temp. sensor to TERMINAL THW of the engine control module, and the vehicle speed signal is input from the ABS speed sensor to skid control ECU, and are sent to the engine control module through communication control. At the same time, the throttle valve opening signal is sent from the throttle position sensor to the TERMINALS VTA1 and VTA2 of the engine control module, as the throttle angle signal.

2. Lock–Up Operation

When the engine control module decides based on each signal that the lock–up condition has been met, the current flows through TERMINAL DSL of the engine control module to TERMINAL 3 of the electronically controlled transmission solenoid to GROUND.

3. Stop Light SW Circuit

If the brake pedal is depressed (Stop light SW on) when driving in lock–up condition, a signal is input to TERMINAL STP of the engine control module. The engine control module operates and cuts the current to the solenoid to release lock–up.

4. Overdrive Circuit

* O/D main SW on
  When the O/D main SW is turned on, a signal is input to TERMINAL ODMS of the engine control module and engine control module operation causes gear shift when the conditions for overdrive are met.
* O/D main SW off
  When the O/D main SW is turned off, a signal is input into TERMINAL ODMS of the engine control module, and turns on the O/D off indicator light. This activates the ECU, and the transmission system is controlled not to shift to overdrive.

○ : Parts Location

Code		See Page	Code		See Page	Code		See Page
A10	A	42	E6	B	42	S15		43
A11	B	42	E7	E	42	S27		41 (2AZ–FE)
A17	B	42	E8	D	42	S28	A	43
B9	A	42	E9	C	42	S29	B	43
B10	B	42	E10		40 (2AZ–FE)	S30	A	43
C6		40 (2AZ–FE)	G5		43	S31	B	43
C11	A	42	J2		41 (2AZ–FE)	T3		41 (2AZ–FE)
C12	B	42	J6		43	T13		41 (2AZ–FE)
E2	B	40 (2AZ–FE)	J7		43	T16		43
E4		42	P1		41 (2AZ–FE)			
E5	A	42	P5		44			

: Junction Block and Wire Harness Connector

Code	See Page	Junction Block and Wire Harness (Connector Location)
1E	29	Cowl Wire and Instrument Panel J/B (Lower Finish Panel)
1G		
1K	28	Instrument Panel Wire and Instrument Panel J/B (Lower Finish Panel)
2A	27	Engine Room Main Wire and Engine Room J/B (Engine Compartment Left)
2B		
2F		
3A	30	Instrument Panel Wire and Center J/B (Behind the Instrument Panel Center)
3B		
3C		
3D		
3E		
3F		
3H	31	
3J		
3K		
4A	33	Cowl Wire and Passenger Side J/B (Right Side of Grove Box)
4D		
4E		
4F		
4H		
4K	32	
4L		
4M		

: Connector Joining Wire Harness and Wire Harness

Code	See Page	Joining Wire Harness and Wire Harness (Connector Location)
IB2	50	Front Door LH Wire and Cowl Wire (Left Kick Panel)
IC3	50	Engine Room Main Wire and Cowl Wire (Left Cowl Side Panel)
IC4		
IF3	50	Instrument Panel Wire and Cowl Wire (Right Side of Instrument Panel J/B)
IK2	51	Engine Room Main Wire and Cowl Wire (Right Cowl Side Panel)
IK3		
IL2	51	Instrument Panel Wire and Cowl Wire (Upper Side of Passenger Side J/B)
IM1	51	Engine Wire and Cowl Wire (Right Kick Panel)

: Ground Points

Code	See Page	Ground Points Location
EE	49 (2AZ–FE)	Intake Side of Cylinder Block
EF	49 (2AZ–FE)	Left Side of Cylinder Block
EH	49 (2AZ–FE)	Under the Left Headlight
IB	50	Right Instrument Panel Brace

Headlight with Daytime Running Light

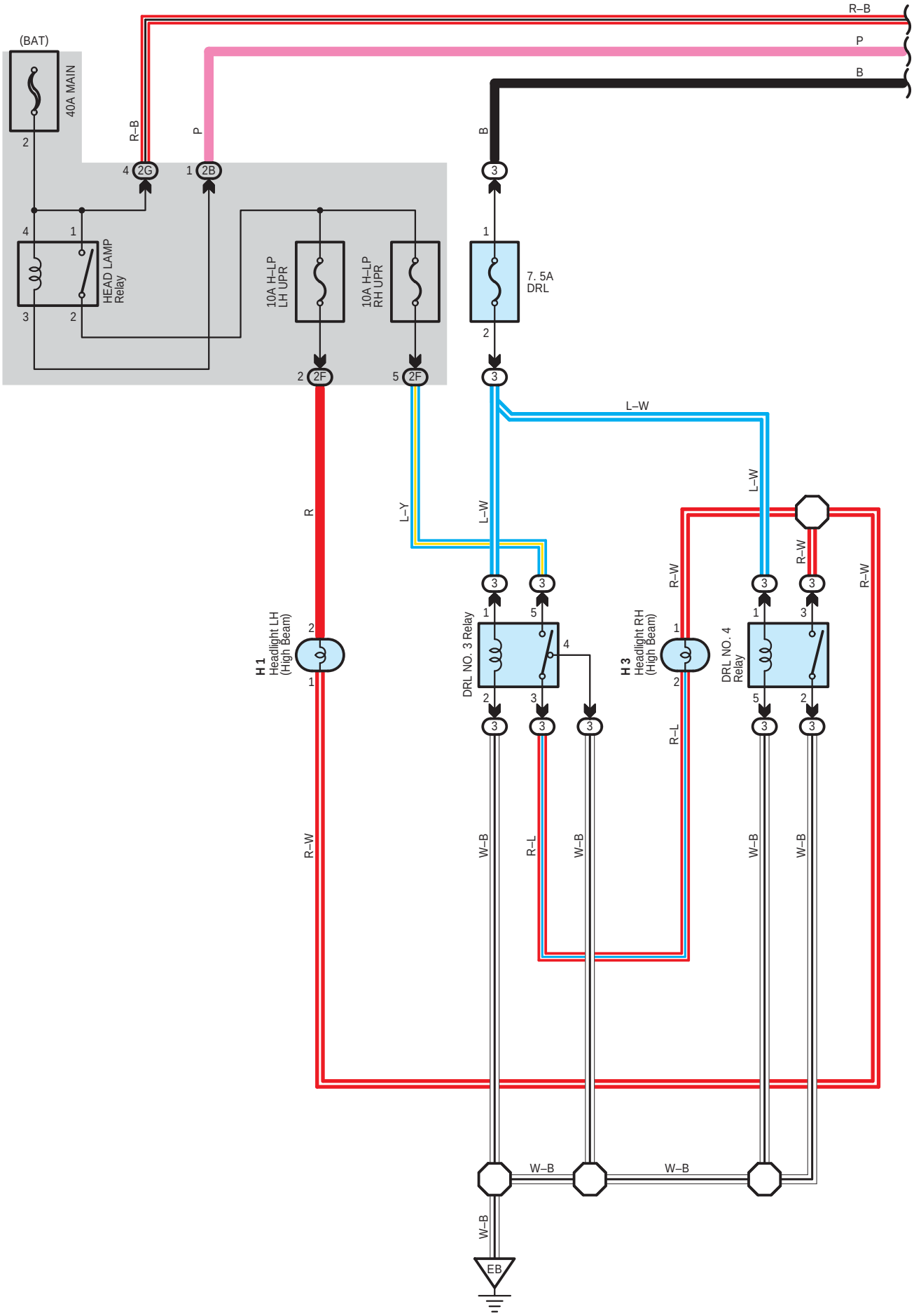

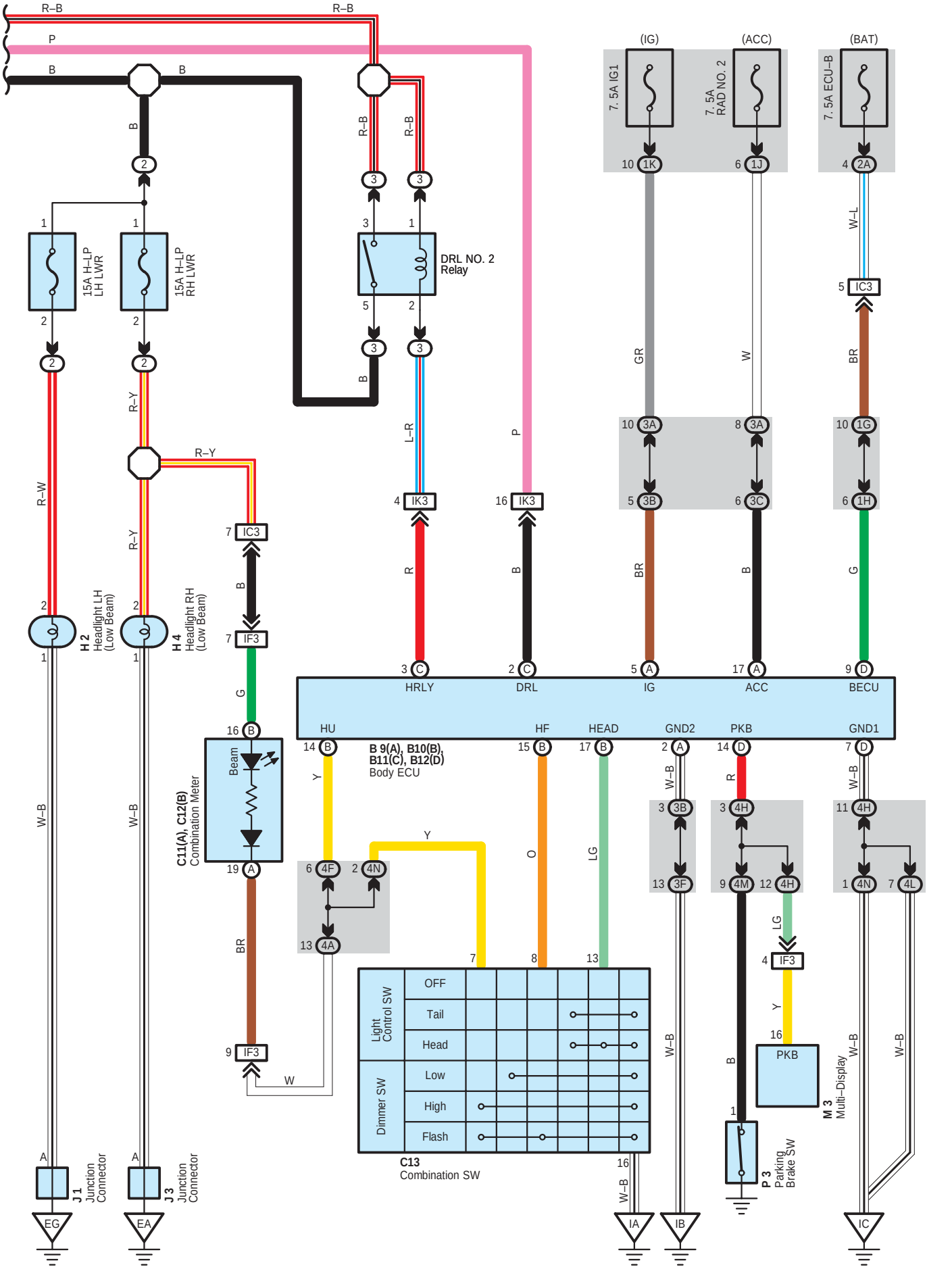
R–B
P
B
15A H–LP LH LWR
15A H–LP RH LWR
DRL NO. 2 Relay
R–Y
R–W
L–R
7. 5A IG1
7. 5A RAD NO. 2
7. 5A ECU–B
(IG)
(ACC)
(BAT)
GR
W
BR
W–L
H 2 Headlight LH (Low Beam)
H 4 Headlight RH (Low Beam)
HRLY
DRL
IG
ACC
BECU
HU
HF
HEAD
GND2
PKB
GND1
B 9(A), B10(B), B11(C), B12(D) Body ECU
C11(A), C12(B) Combination Meter
Beam
Light Control SW
Dimmer SW
OFF
Tail
Head
Low
High
Flash
C13 Combination SW
J 1 Junction Connector
J 3 Junction Connector
P 3 Parking Brake SW
M 3 Multi–Display
EG
EA
IA
IB
IC

Headlight with Daytime Running Light

System Outline

1. Daytime Running Light Operation

The headlight is turned on when all the following conditions are satisfied

- When the ignition switch is ON position
- When the generator is generating electricity
- When the light control SW is OFF position
- When the parking brake SW is OFF position

2. Headlight Operation

- The headlight comes on at the LOW position when the dimmer SW is turned to the low beam position with the light control SW being HEAD position.
- If the dimmer SW is turned to the HIGH position with the light control SW being HEAD position, the headlight comes on at the high beam position. Moreover, the high beam indicator light appears on the combination meter.
- Regardless of the light control SW positions, the headlight comes on at the low beam position when the dimmer SW is turned to FLASH position. Moreover, the high beam indicator light appears on the combination meter.

: Parts Location

Code		See Page	Code	See Page	Code	See Page
B9	A	42	H1	38 (3MZ–FE)	H4	40 (2AZ–FE)
B10	B	42		40 (2AZ–FE)	J1	39 (3MZ–FE)
B11	C	42	H2	38 (3MZ–FE)		41 (2AZ–FE)
B12	D	42		40 (2AZ–FE)	J3	39 (3MZ–FE)
C11	A	42	H3	38 (3MZ–FE)		41 (2AZ–FE)
C12	B	42		40 (2AZ–FE)	M3	43
C13		42	H4	38 (3MZ–FE)	P3	43

: Relay Blocks

Code	See Page	Relay Blocks (Relay Block Location)
2	22	Engine Room R/B (Engine Compartment Left)
3	23	Engine Room R/B No.3 (Engine Compartment Rear Left)

: Junction Block and Wire Harness Connector

Code	See Page	Junction Block and Wire Harness (Connector Location)
1G	29	Cowl Wire and Instrument Panel J/B (Lower Finish Panel)
1H		
1J	28	Instrument Panel Wire and Instrument Panel J/B (Lower Finish Panel)
1K		
2A	27	Engine Room Main Wire and Engine Room J/B (Engine Compartment Left)
2B		
2F		
2G		
3A	30	Instrument Panel Wire and Center J/B (Behind the Instrument Panel Center)
3B		
3C		
3F		
4A	33	Cowl Wire and Passenger Side J/B (Right Side of Grove Box)
4F		
4H		
4L	32	
4M		
4N		

: Connector Joining Wire Harness and Wire Harness

Code	See Page	Joining Wire Harness and Wire Harness (Connector Location)
IC3	50	Engine Room Main Wire and Cowl Wire (Left Cowl Side Panel)
IF3	50	Instrument Panel Wire and Cowl Wire (Right Side of Instrument Panel J/B)
IK3	51	Engine Room Main Wire and Cowl Wire (Right Cowl Side Panel)

: Ground Points

Code	See Page	Ground Points Location
EA	48 (3MZ–FE)	Right Front Fender Apron
	49 (2AZ–FE)	
EB	48 (3MZ–FE)	
	49 (2AZ–FE)	
EG	48 (3MZ–FE)	Under the Left Headlight
	49 (2AZ–FE)	
IA	50	Left Cowl Side Panel
IB	50	Right Instrument Panel Brace
IC	50	Right Cowl Side Panel

Headlight without Daytime Running Light

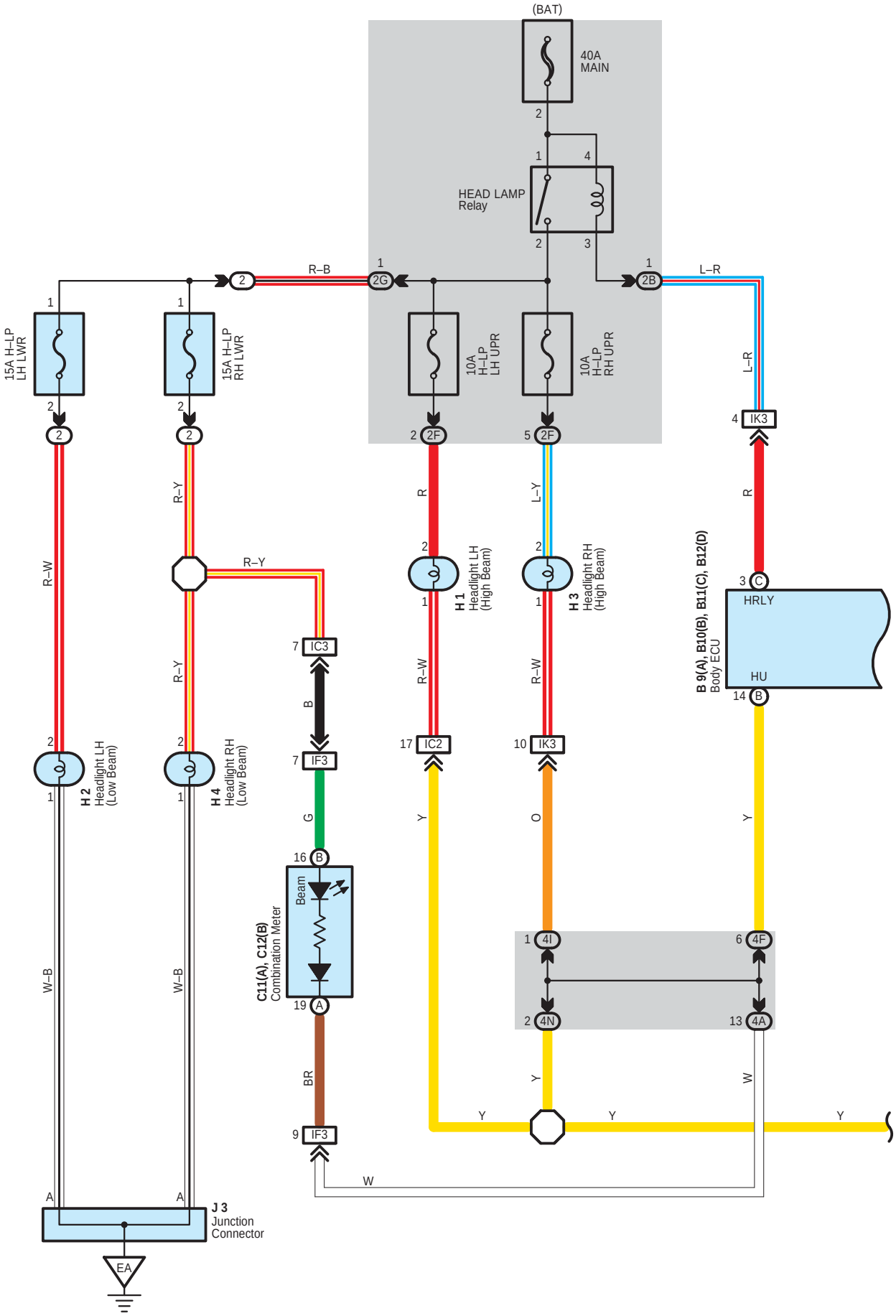

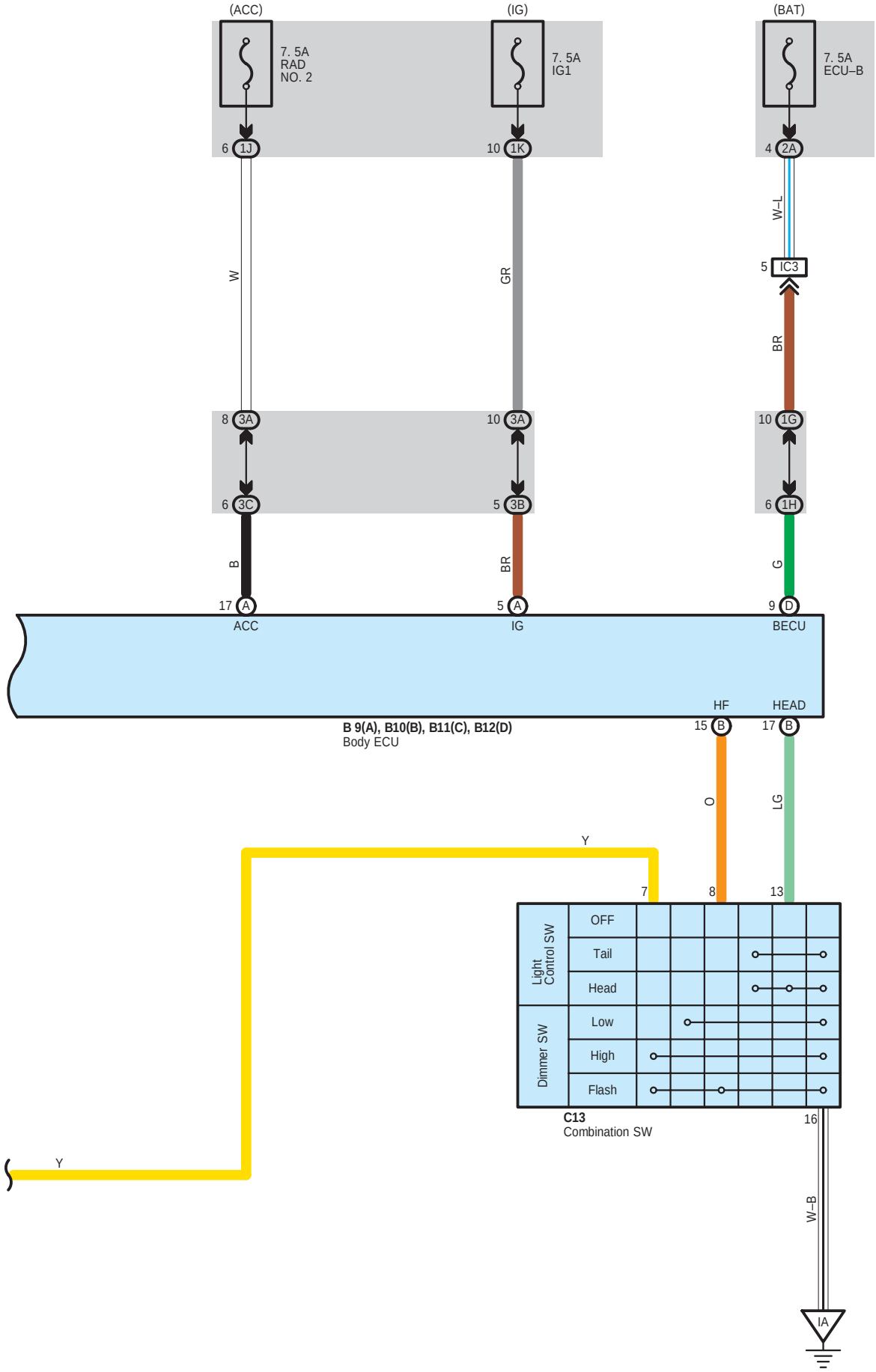
(ACC)
(IG)
(BAT)
7. 5A
RAD
NO. 2
7. 5A
IG1
7. 5A
ECU–B
6 1J
10 1K
4 2A
W
GR
W–L
5 IC3
BR
8 3A
10 3A
10 1G
6 3C
5 3B
6 1H
B
BR
G
17 A
5 A
9 D
ACC
IG
BECU
HF
HEAD
B 9(A), B10(B), B11(C), B12(D)
Body ECU
15 B
17 B
O
LG
Y
7
8
13
Light Control SW
Dimmer SW
OFF
Tail
Head
Low
High
Flash
C13
Combination SW
16
Y
W–B
IA

Headlight without Daytime Running Light

: Parts Location

Code		See Page	Code	See Page	Code	See Page
B9	A	42	C13	42	H3	40 (2AZ–FE)
B10	B	42	H1	38 (3MZ–FE)	H4	38 (3MZ–FE)
B11	C	42		40 (2AZ–FE)		40 (2AZ–FE)
B12	D	42	H2	38 (3MZ–FE)	J3	39 (3MZ–FE)
C11	A	42		40 (2AZ–FE)		41 (2AZ–FE)
C12	B	42	H3	38 (3MZ–FE)		

: Relay Blocks

Code	See Page	Relay Blocks (Relay Block Location)
2	22	Engine Room R/B (Engine Compartment Left)

: Junction Block and Wire Harness Connector

Code	See Page	Junction Block and Wire Harness (Connector Location)
1G	29	Cowl Wire and Instrument Panel J/B (Lower Finish Panel)
1H		
1J	28	Instrument Panel Wire and Instrument Panel J/B (Lower Finish Panel)
1K		
2A	27	Engine Room Main Wire and Engine Room J/B (Engine Compartment Left)
2B		
2F		
2G		
3A	30	Instrument Panel Wire and Center J/B (Behind the Instrument Panel Center)
3B		
3C		
4A	33	Cowl Wire and Passenger Side J/B (Right Side of Grove Box)
4F		
4I	32	
4N		

: Connector Joining Wire Harness and Wire Harness

Code	See Page	Joining Wire Harness and Wire Harness (Connector Location)
IC2	50	Engine Room Main Wire and Cowl Wire (Left Cowl Side Panel)
IC3		
IF3	50	Instrument Panel Wire and Cowl Wire (Right Side of Instrument Panel J/B)
IK3	51	Engine Room Main Wire and Cowl Wire (Right Cowl Side Panel)

: Ground Points

Code	See Page	Ground Points Location
EA	48 (3MZ–FE)	Right Front Fender Apron
	49 (2AZ–FE)	
IA	50	Left Cowl Side Panel

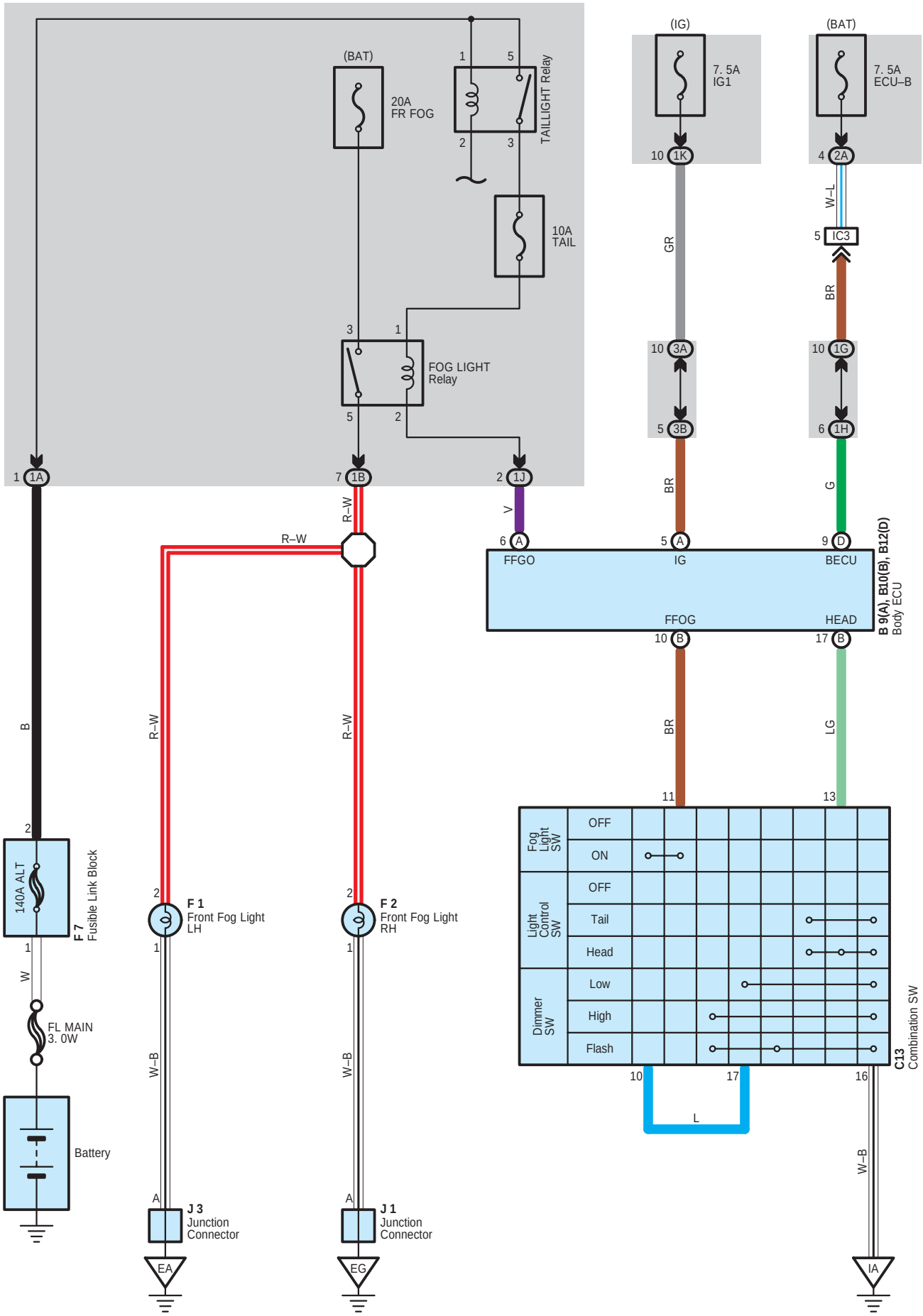
(BAT)
20A
FR FOG
TAILLIGHT Relay
10A
TAIL
FOG LIGHT
Relay
(IG)
7. 5A
IG1
(BAT)
7. 5A
ECU–B
1A
1B
1J
1K
2A
3A
3B
1G
1H
IC3
R–W
V
GR
W–L
BR
G
FFGO
IG
BECU
FFOG
HEAD
B 9(A), B10(B), B12(D)
Body ECU
B
140A ALT
F 7
Fusible Link Block
W
FL MAIN
3. 0W
Battery
F 1
Front Fog Light
LH
F 2
Front Fog Light
RH
W–B
J 3
Junction
Connector
J 1
Junction
Connector
EA
EG
IA
Fog
Light
SW
OFF
ON
Light
Control
SW
OFF
Tail
Head
Dimmer
SW
Low
High
Flash
C13
Combination SW
L
LG

: Parts Location

Code		See Page	Code	See Page	Code	See Page
B9	A	42	F1	40 (2AZ–FE)	J1	39 (3MZ–FE)
B10	B	42	F2	38 (3MZ–FE)		41 (2AZ–FE)
B12	D	42		40 (2AZ–FE)	J3	39 (3MZ–FE)
C13		42	F7	38 (3MZ–FE)		41 (2AZ–FE)
F1		38 (3MZ–FE)		40 (2AZ–FE)		

: Junction Block and Wire Harness Connector

Code	See Page	Junction Block and Wire Harness (Connector Location)
1A	29	Engine Room Main Wire and Instrument Panel J/B (Lower Finish Panel)
1B		
1G	29	Cowl Wire and Instrument Panel J/B (Lower Finish Panel)
1H		
1J	28	Instrument Panel Wire and Instrument Panel J/B (Lower Finish Panel)
1K		
2A	27	Engine Room Main Wire and Engine Room J/B (Engine Compartment Left)
3A	30	Instrument Panel Wire and Center J/B (Behind the Instrument Panel Center)
3B		

: Connector Joining Wire Harness and Wire Harness

Code	See Page	Joining Wire Harness and Wire Harness (Connector Location)
IC3	50	Engine Room Main Wire and Cowl Wire (Left Cowl Side Panel)

: Ground Points

Code	See Page	Ground Points Location
EA	48 (3MZ–FE)	Right Front Fender Apron
	49 (2AZ–FE)	
EG	48 (3MZ–FE)	Under the Left Headlight
	49 (2AZ–FE)	
IA	50	Left Cowl Side Panel

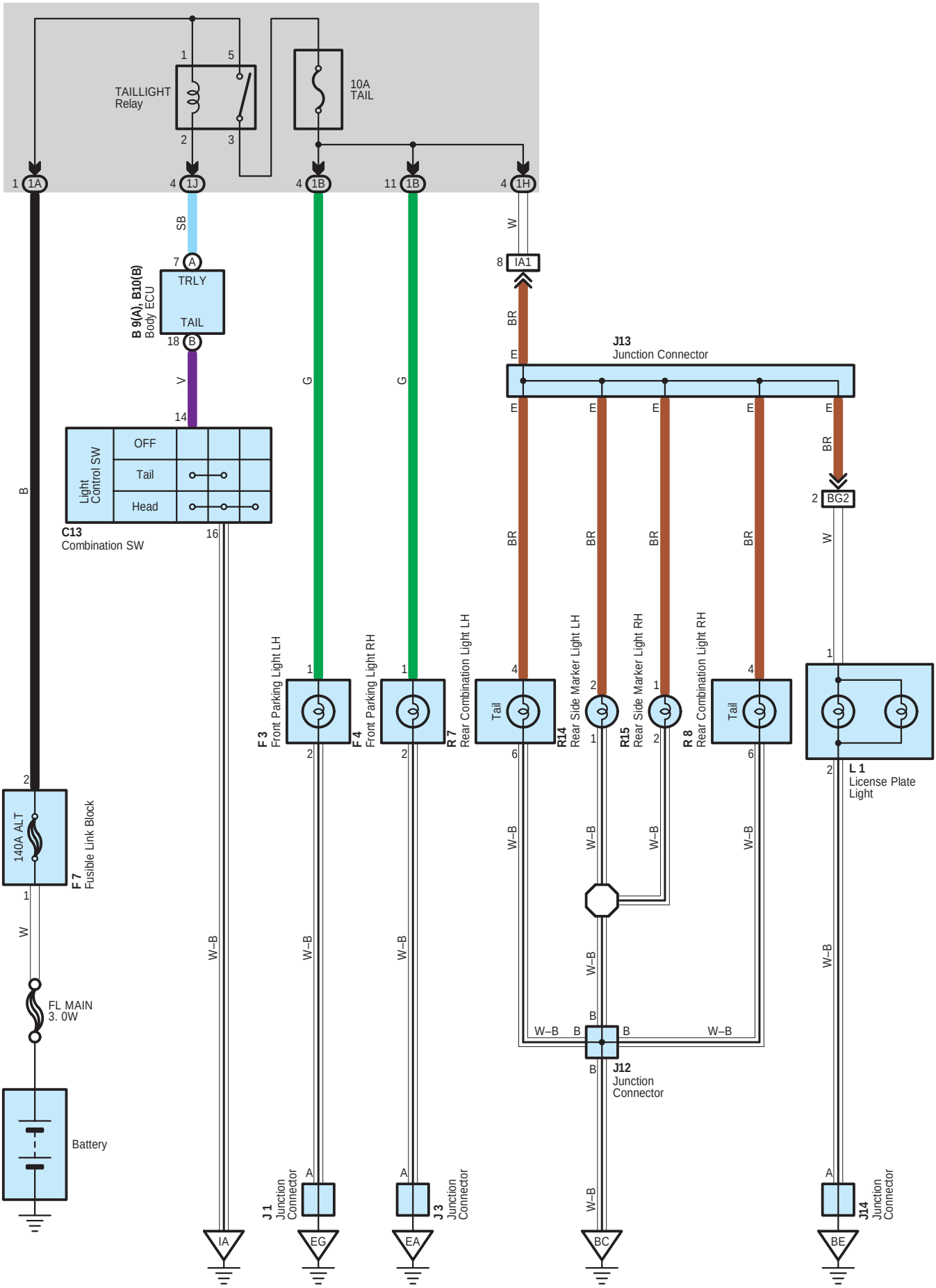
TAILLIGHT Relay
10A TAIL
1A
1J
1B
1B
1H
SB
B 9(A), B10(B) Body ECU
TRLY
TAIL
V
G
G
W
IA1
BR
J13 Junction Connector
BR
BG2
W
Light Control SW
OFF
Tail
Head
C13 Combination SW
B
W–B
F 3 Front Parking Light LH
F 4 Front Parking Light RH
R 7 Rear Combination Light LH
R14 Rear Side Marker Light LH
R15 Rear Side Marker Light RH
R 8 Rear Combination Light RH
L 1 License Plate Light
140A ALT
F 7 Fusible Link Block
W
FL MAIN 3. 0W
Battery
J 1 Junction Connector
J 3 Junction Connector
J12 Junction Connector
J14 Junction Connector
IA
EG
EA
BC
BE

: Parts Location

Code	See Page	Code	See Page	Code	See Page
B9 A	42	F7	38 (3MZ–FE)	J13	44
B10 B	42		40 (2AZ–FE)	J14	44
C13	42	J1	39 (3MZ–FE)	L1	44
F3	38 (3MZ–FE)		41 (2AZ–FE)	R7	45
	40 (2AZ–FE)	J3	39 (3MZ–FE)	R8	45
F4	38 (3MZ–FE)		41 (2AZ–FE)	R14	45
	40 (2AZ–FE)	J12	44	R15	45

: Junction Block and Wire Harness Connector

Code	See Page	Junction Block and Wire Harness (Connector Location)
1A	29	Engine Room Main Wire and Instrument Panel J/B (Lower Finish Panel)
1B		
1H	29	Cowl Wire and Instrument Panel J/B (Lower Finish Panel)
1J	28	Instrument Panel Wire and Instrument Panel J/B (Lower Finish Panel)

: Connector Joining Wire Harness and Wire Harness

Code	See Page	Joining Wire Harness and Wire Harness (Connector Location)
IA1	50	Cowl Wire and Floor No.2 Wire (Left Kick Panel)
BG2	52	Back Door No.1 Wire and Floor No.2 Wire (Rear Left of the Roof)

: Ground Points

Code	See Page	Ground Points Location
EA	48 (3MZ–FE)	Right Front Fender Apron
	49 (2AZ–FE)	
EG	48 (3MZ–FE)	Under the Left Headlight
	49 (2AZ–FE)	
IA	50	Left Cowl Side Panel
BC	52	Left Side of Rear Cross Member
BE	52	Left Side of Back Door

Turn Signal and Hazard Warning Light

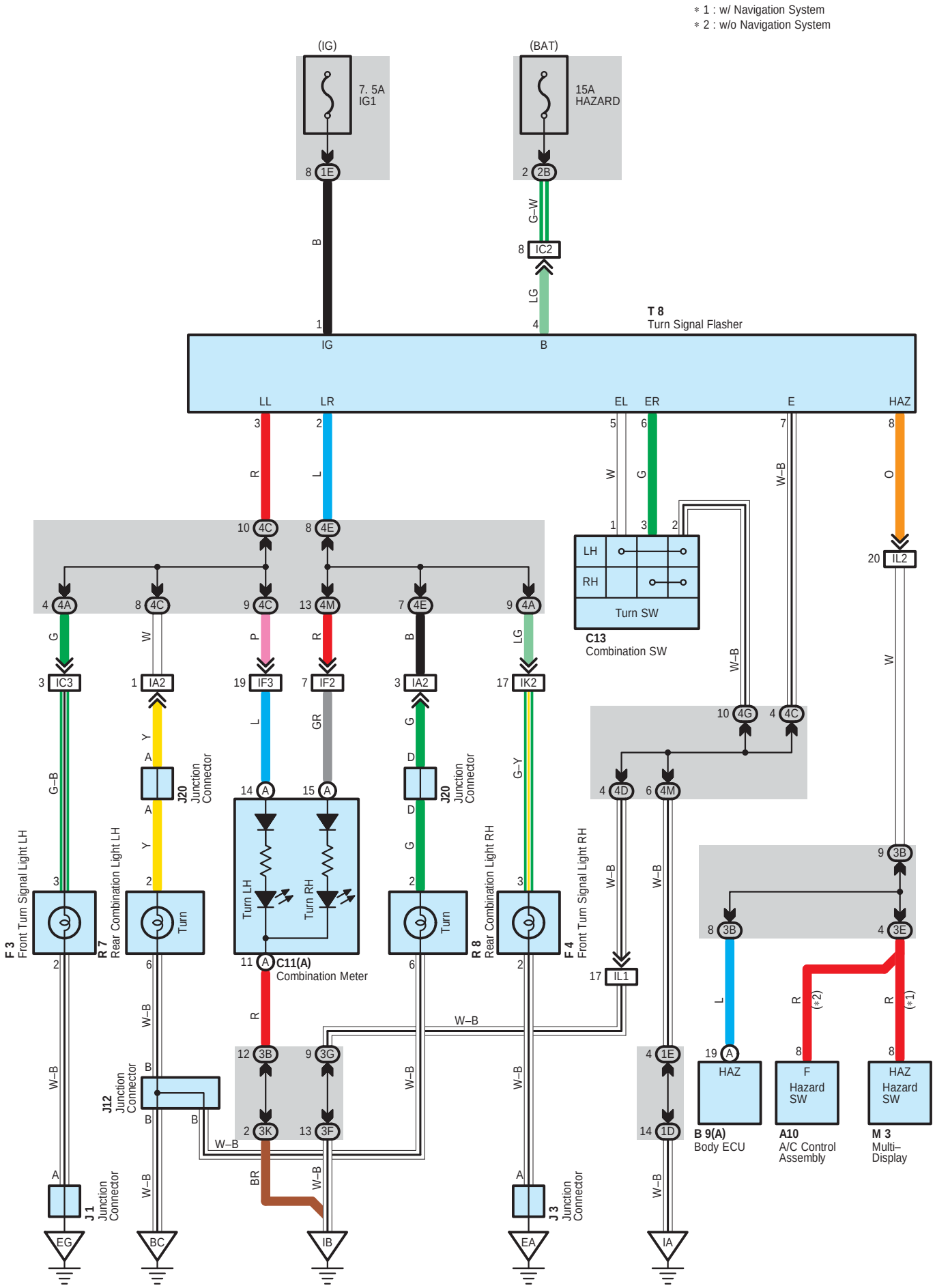

: Parts Location

Code	See Page	Code	See Page	Code	See Page
A10	42	F4	38 (3MZ–FE)	J12	44
B9 A	42		40 (2AZ–FE)	J20	43
C11 A	42	J1	39 (3MZ–FE)	M3	43
C13	42		41 (2AZ–FE)	R7	45
F3	38 (3MZ–FE)	J3	39 (3MZ–FE)	R8	45
	40 (2AZ–FE)		41 (2AZ–FE)	T8	43

: Junction Block and Wire Harness Connector

Code	See Page	Junction Block and Wire Harness (Connector Location)
1D	29	Cowl Wire and Instrument Panel J/B (Lower Finish Panel)
1E		
2B	27	Engine Room Main Wire and Engine Room J/B (Engine Compartment Left)
3B	30	Instrument Panel Wire and Center J/B (Behind the Instrument Panel Center)
3E		
3F		
3G	31	
3K		
4A	33	Cowl Wire and Passenger Side J/B (Right Side of Grove Box)
4C		
4D		
4E		
4G		
4M	32	

: Connector Joining Wire Harness and Wire Harness

Code	See Page	Joining Wire Harness and Wire Harness (Connector Location)
IA2	50	Cowl Wire and Floor No.2 Wire (Left Kick Panel)
IC2	50	Engine Room Main Wire and Cowl Wire (Left Cowl Side Panel)
IC3		
IF2	50	Instrument Panel Wire and Cowl Wire (Right Side of Instrument Panel J/B)
IF3		
IK2	51	Engine Room Main Wire and Cowl Wire (Right Cowl Side Panel)
IL1	51	Instrument Panel Wire and Cowl Wire (Upper Side of Passenger Side J/B)
IL2		

: Ground Points

Code	See Page	Ground Points Location
EA	48 (3MZ–FE)	Right Front Fender Apron
	49 (2AZ–FE)	
EG	48 (3MZ–FE)	Under the Left Headlight
	49 (2AZ–FE)	
IA	50	Left Cowl Side Panel
IB	50	Right Instrument Panel Brace
BC	52	Left Side of Rear Cross Member

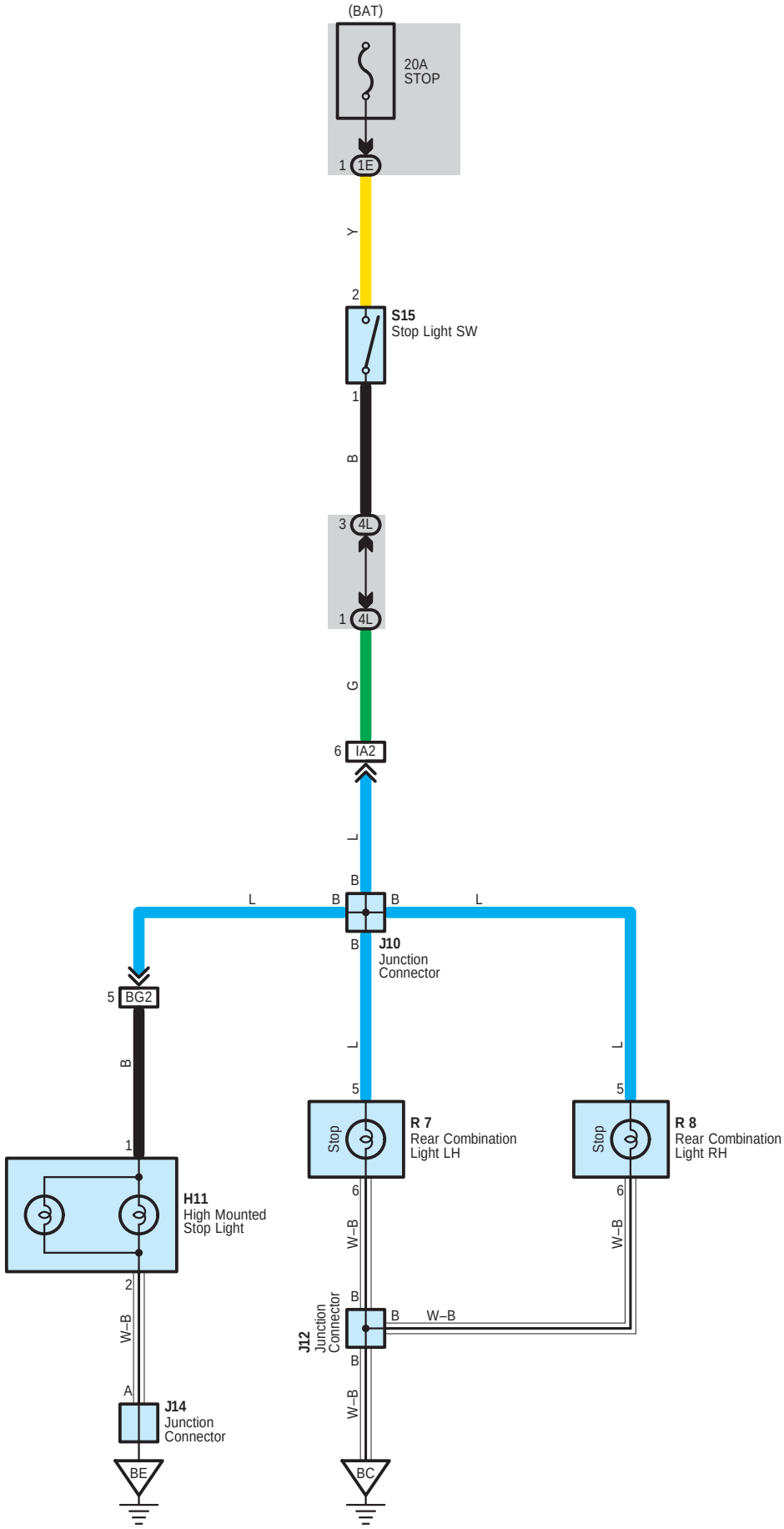
(BAT)
20A
STOP
1E
Y
S15
Stop Light SW
B
4L
4L
G
IA2
L
B
L
B
B
L
J10
Junction
Connector
BG2
B
L
L
Stop
R 7
Rear Combination
Light LH
Stop
R 8
Rear Combination
Light RH
H11
High Mounted
Stop Light
W–B
W–B
J12
Junction
Connector
W–B
W–B
J14
Junction
Connector
BE
BC

: Parts Location

Code	See Page	Code	See Page	Code	See Page
H11	44	J14	44	S15	43
J10	44	R7	45		
J12	44	R8	45		

: Junction Block and Wire Harness Connector

Code	See Page	Junction Block and Wire Harness (Connector Location)
1E	29	Cowl Wire and Instrument Panel J/B (Lower Finish Panel)
4L	32	Cowl Wire and Passenger Side J/B (Right Side of Grove Box)

: Connector Joining Wire Harness and Wire Harness

Code	See Page	Joining Wire Harness and Wire Harness (Connector Location)
IA2	50	Cowl Wire and Floor No.2 Wire (Left Kick Panel)
BG2	52	Back Door No.1 Wire and Floor No.2 Wire (Rear Left of the Roof)

: Ground Points

Code	See Page	Ground Points Location
BC	52	Left Side of Rear Cross Member
BE	52	Left Side of Back Door

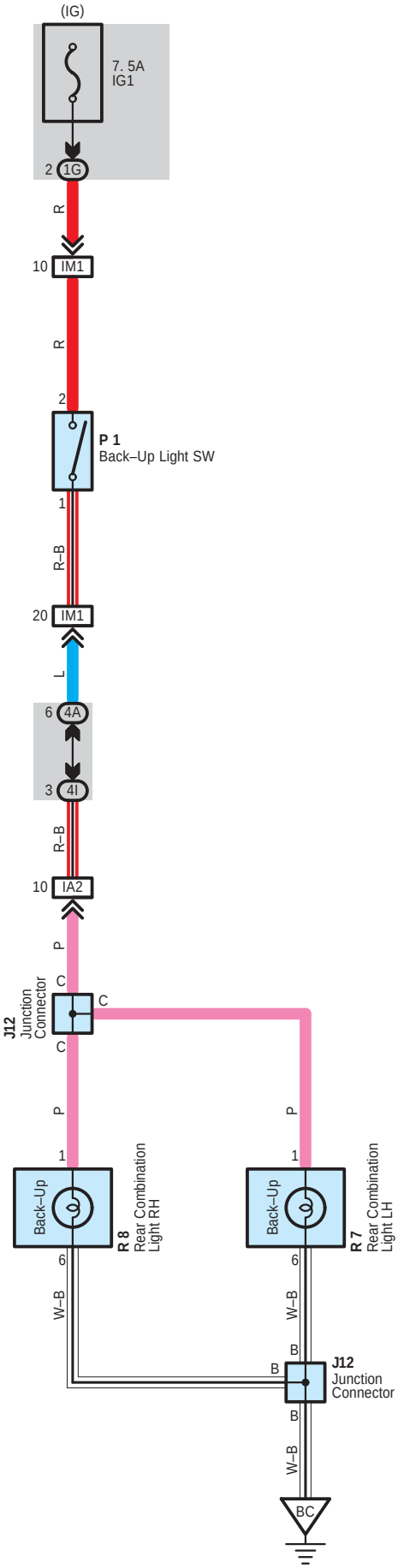
(IG)
7. 5A
IG1
2 1G
R
10 IM1
R
2
P 1
Back–Up Light SW
1
R–B
20 IM1
L
6 4A
3 4I
R–B
10 IA2
P
C
J12
Junction
Connector
C
C
P
P
1
Back–Up
R 8
Rear Combination
Light RH
1
Back–Up
R 7
Rear Combination
Light LH
6
W–B
6
W–B
B
B
J12
Junction
Connector
B
W–B
BC

○ : Parts Location

Code	See Page	Code	See Page	Code	See Page
J12	44	P1	41 (2AZ–FE)	R8	45
P1	39 (3MZ–FE)	R7	45		

⬭ : Junction Block and Wire Harness Connector

Code	See Page	Junction Block and Wire Harness (Connector Location)
1G	29	Cowl Wire and Instrument Panel J/B (Lower Finish Panel)
4A	33	Cowl Wire and Passenger Side J/B (Right Side of Grove Box)
4I	32	

▭ : Connector Joining Wire Harness and Wire Harness

Code	See Page	Joining Wire Harness and Wire Harness (Connector Location)
IA2	50	Cowl Wire and Floor No.2 Wire (Left Kick Panel)
IM1	51	Engine Wire and Cowl Wire (Right Kick Panel)

▽ : Ground Points

Code	See Page	Ground Points Location
BC	52	Left Side of Rear Cross Member

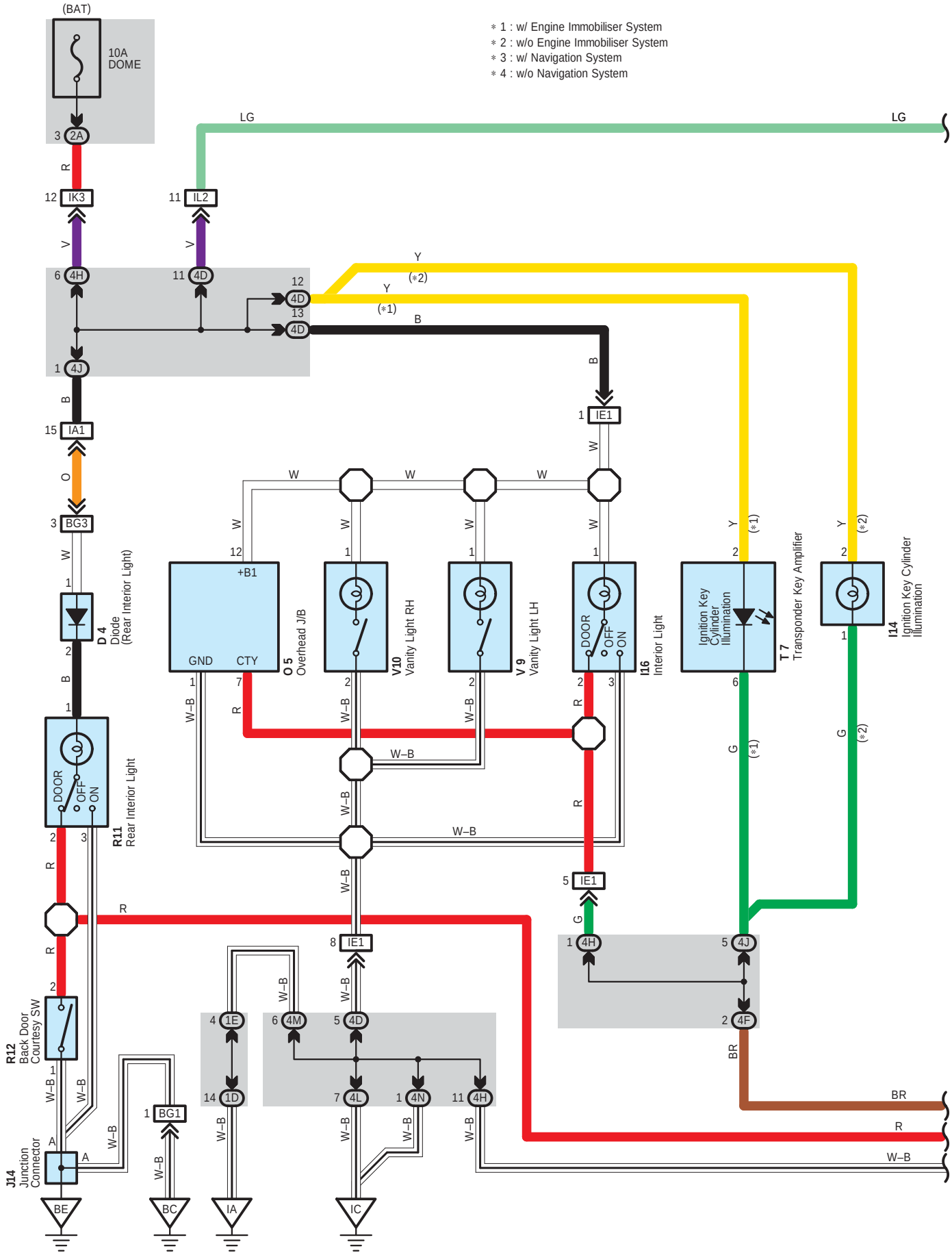

＊1 : w/ Engine Immobiliser System
＊2 : w/o Engine Immobiliser System
＊3 : w/ Navigation System
＊4 : w/o Navigation System

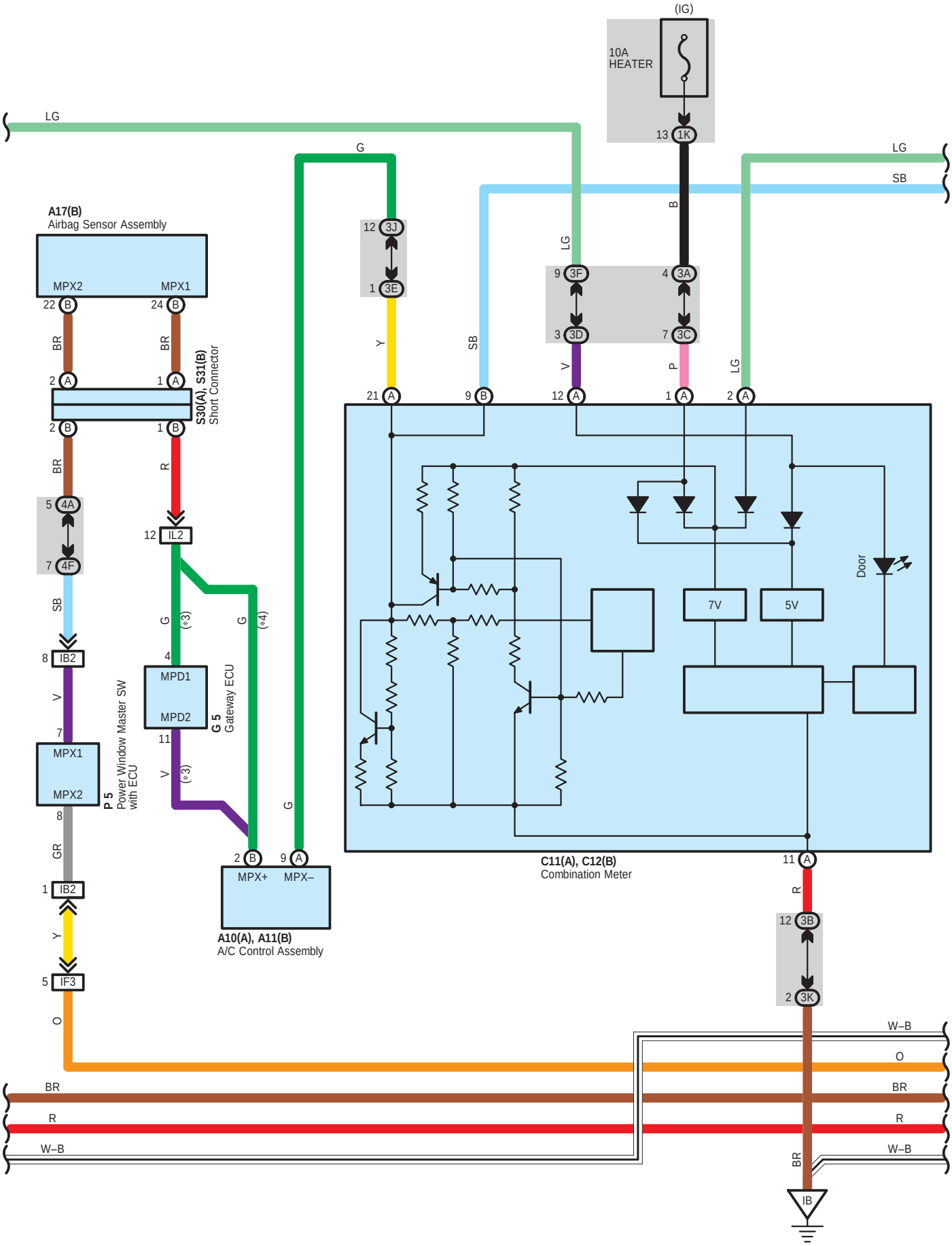
(IG)
10A
HEATER
13 1K
LG
G
LG
SB
B
A17(B)
Airbag Sensor Assembly
MPX2
MPX1
22 B
24 B
BR
BR
2 A
1 A
S30(A), S31(B)
Short Connector
2 B
1 B
BR
R
5 4A
7 4F
SB
12 IL2
8 IB2
V
7
MPX1
MPX2
8
GR
1 IB2
Y
5 IF3
O
P 5
Power Window Master SW
with ECU
G
(*3)
4
MPD1
MPD2
11
V
(*3)
G 5
Gateway ECU
G
(*4)
2 B
9 A
MPX+
MPX–
A10(A), A11(B)
A/C Control Assembly
12 3J
1 3E
Y
21 A
SB
9 B
9 3F
3 3D
LG
V
12 A
4 3A
7 3C
P
1 A
LG
2 A
C11(A), C12(B)
Combination Meter
Door
7V
5V
11 A
R
12 3B
2 3K
W–B
O
BR
R
W–B
BR
W–B
IB

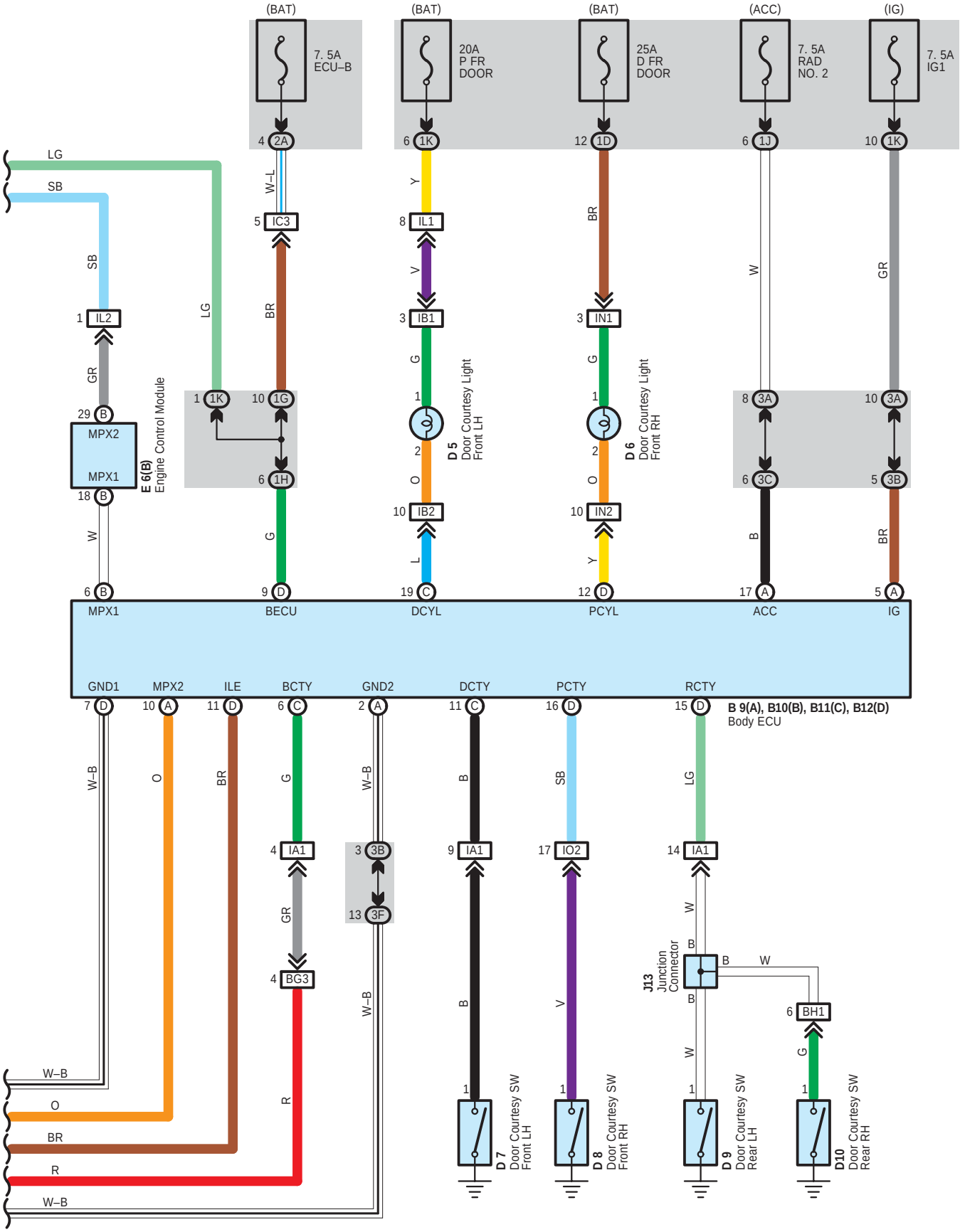
(BAT)
7. 5A
ECU–B
(BAT)
20A
P FR
DOOR
(BAT)
25A
D FR
DOOR
(ACC)
7. 5A
RAD
NO. 2
(IG)
7. 5A
IG1
LG
SB
W–L
Y
BR
W
GR
SB
LG
BR
V
G
O
L
G
W
B
GR
O
G
Y
B
BR
E 6(B)
Engine Control Module
MPX2
MPX1
D 5
Door Courtesy Light
Front LH
D 6
Door Courtesy Light
Front RH
MPX1
BECU
DCYL
PCYL
ACC
IG
GND1
MPX2
ILE
BCTY
GND2
DCTY
PCTY
RCTY
B 9(A), B10(B), B11(C), B12(D)
Body ECU
W–B
O
BR
G
W–B
B
SB
LG
GR
W–B
B
V
W
B
W
J13
Junction
Connector
W–B
O
BR
R
W–B
D 7
Door Courtesy SW
Front LH
D 8
Door Courtesy SW
Front RH
D 9
Door Courtesy SW
Rear LH
D10
Door Courtesy SW
Rear RH

System Outline

Illuminated Entry System

This system provides various functions listed below through communication control of the body ECU etc.

* Each relevant light lights up if any door is opened.
* If all the doors are closed with the ignition SW set at OFF after any door is opened, each light lights up for 15 sec., and then fades out when the time set on the timer has elapsed.
* If any door is unlocked from the driver or passenger side or if any door is unlocked with the unlock SW on the transmitter after all the doors are closed and locked, each light lights up for 15 sec., and then fades out when the time set on the timer has elapsed.
* If the ignition SW is turned to the ACC or ON position while each light is being lit by the timer, the timer lighting is cancelled and the light fades out.
* If all the doors are closed with the ignition SW set at ACC or ON after any door is opened, the timer lighting is cancelled and the light fades out.
* Each light above is the interior light, ignition key cylinder light, and door courtesy lights.

○ : Parts Location

Code	See Page	Code	See Page	Code	See Page
A10 A	42	D6	44	O5	44
A11 B	42	D7	44	P5	44
A17 B	42	D8	44	R11	45
B9 A	42	D9	44	R12	45
B10 B	42	D10	44	S30 A	43
B11 C	42	E6 B	42	S31 B	43
B12 D	42	G5	43	T7	43
C11 A	42	I14	43	V9	45
C12 B	42	I16	44	V10	45
D4	44	J13	44		
D5	44	J14	44		

⬭ : Junction Block and Wire Harness Connector

Code	See Page	Junction Block and Wire Harness (Connector Location)
1D	29	Cowl Wire and Instrument Panel J/B (Lower Finish Panel)
1E		
1G		
1H		
1J	28	Instrument Panel Wire and Instrument Panel J/B (Lower Finish Panel)
1K		
2A	27	Engine Room Main Wire and Engine Room J/B (Engine Compartment Left)
3A	30	Instrument Panel Wire and Center J/B (Behind the Instrument Panel Center)
3B		
3C		
3D		
3E		
3F		
3J	31	
3K		
4A	33	Cowl Wire and Passenger Side J/B (Right Side of Grove Box)
4D		
4F		
4H		
4J	32	
4L		
4M		
4N		

Interior Light

: Connector Joining Wire Harness and Wire Harness

Code	See Page	Joining Wire Harness and Wire Harness (Connector Location)
IA1	50	Cowl Wire and Floor No.2 Wire (Left Kick Panel)
IB1	50	Front Door LH Wire and Cowl Wire (Left Kick Panel)
IB2		
IC3	50	Engine Room Main Wire and Cowl Wire (Left Cowl Side Panel)
IE1	50	Roof Wire and Cowl Wire (Near the Bottom of Left Front Pillar)
IF3	50	Instrument Panel Wire and Cowl Wire (Right Side of Instrument Panel J/B)
IK3	51	Engine Room Main Wire and Cowl Wire (Right Cowl Side Panel)
IL1	51	Instrument Panel Wire and Cowl Wire (Upper Side of Passenger Side J/B)
IL2		
IN1	51	Front Door RH Wire and Cowl Wire (Right Kick Panel)
IN2		
IO2	51	Cowl Wire and Floor Wire (Right Kick Panel)
BG1	52	Back Door No.1 Wire and Floor No.2 Wire (Rear Left of the Roof)
BG3		
BH1	52	Floor No.2 Wire and Floor Wire (Near the Rear Side Marker Light RH)

: Ground Points

Code	See Page	Ground Points Location
IA	50	Left Cowl Side Panel
IB	50	Right Instrument Panel Brace
IC	50	Right Cowl Side Panel
BC	52	Left Side of Rear Cross Member
BE	52	Left Side of Back Door

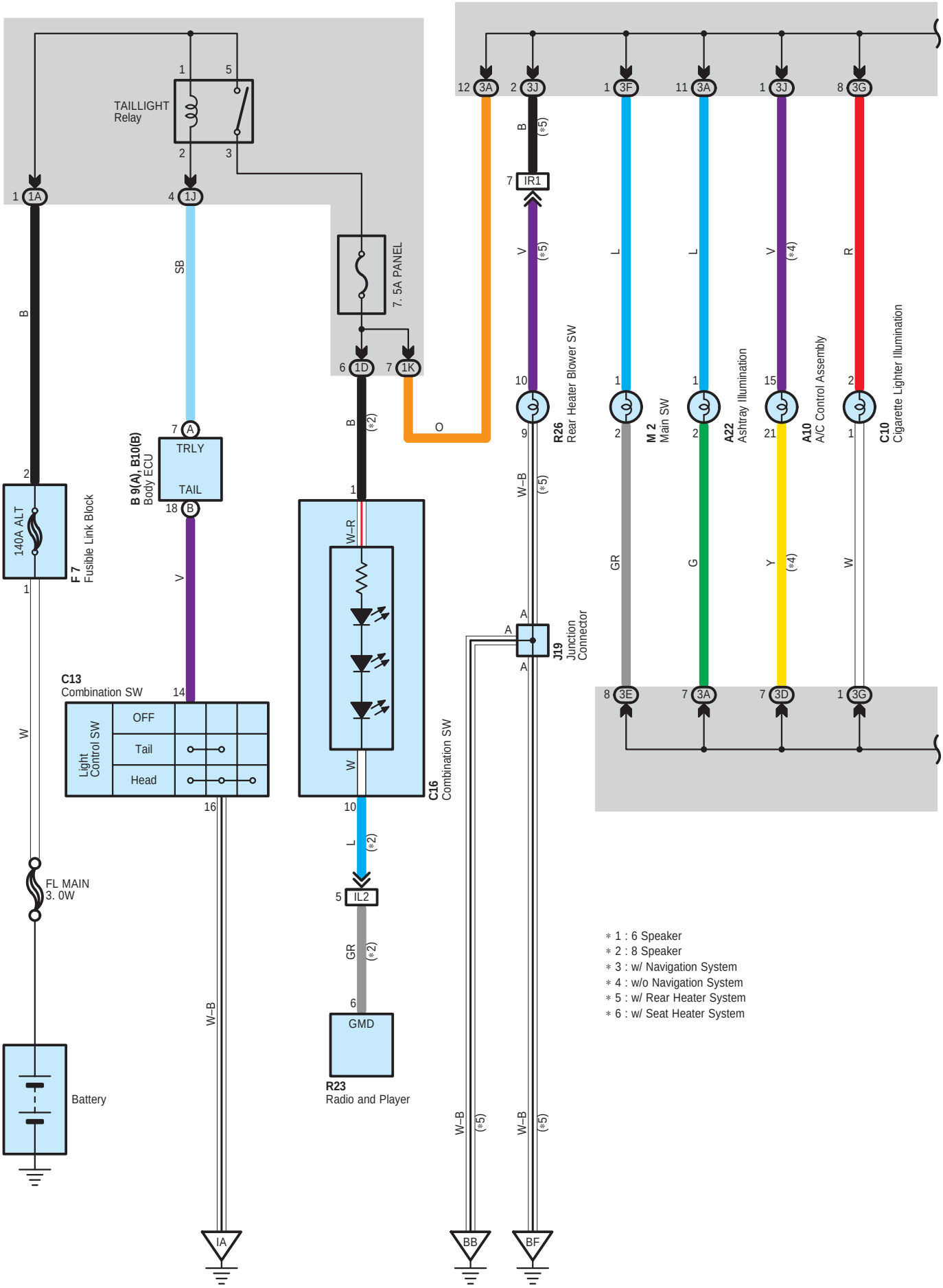
TAILLIGHT Relay
7. 5A PANEL
140A ALT
F 7 Fusible Link Block
B 9(A), B10(B) Body ECU
TRLY
TAIL
C13 Combination SW
Light Control SW
OFF
Tail
Head
C16 Combination SW
R23 Radio and Player
GMD
IL2
FL MAIN 3. 0W
Battery
IA
BB
BF
J19 Junction Connector
R26 Rear Heater Blower SW
M 2 Main SW
A22 Ashtray Illumination
A10 A/C Control Assembly
C10 Cigarette Lighter Illumination
* 1 : 6 Speaker
* 2 : 8 Speaker
* 3 : w/ Navigation System
* 4 : w/o Navigation System
* 5 : w/ Rear Heater System
* 6 : w/ Seat Heater System

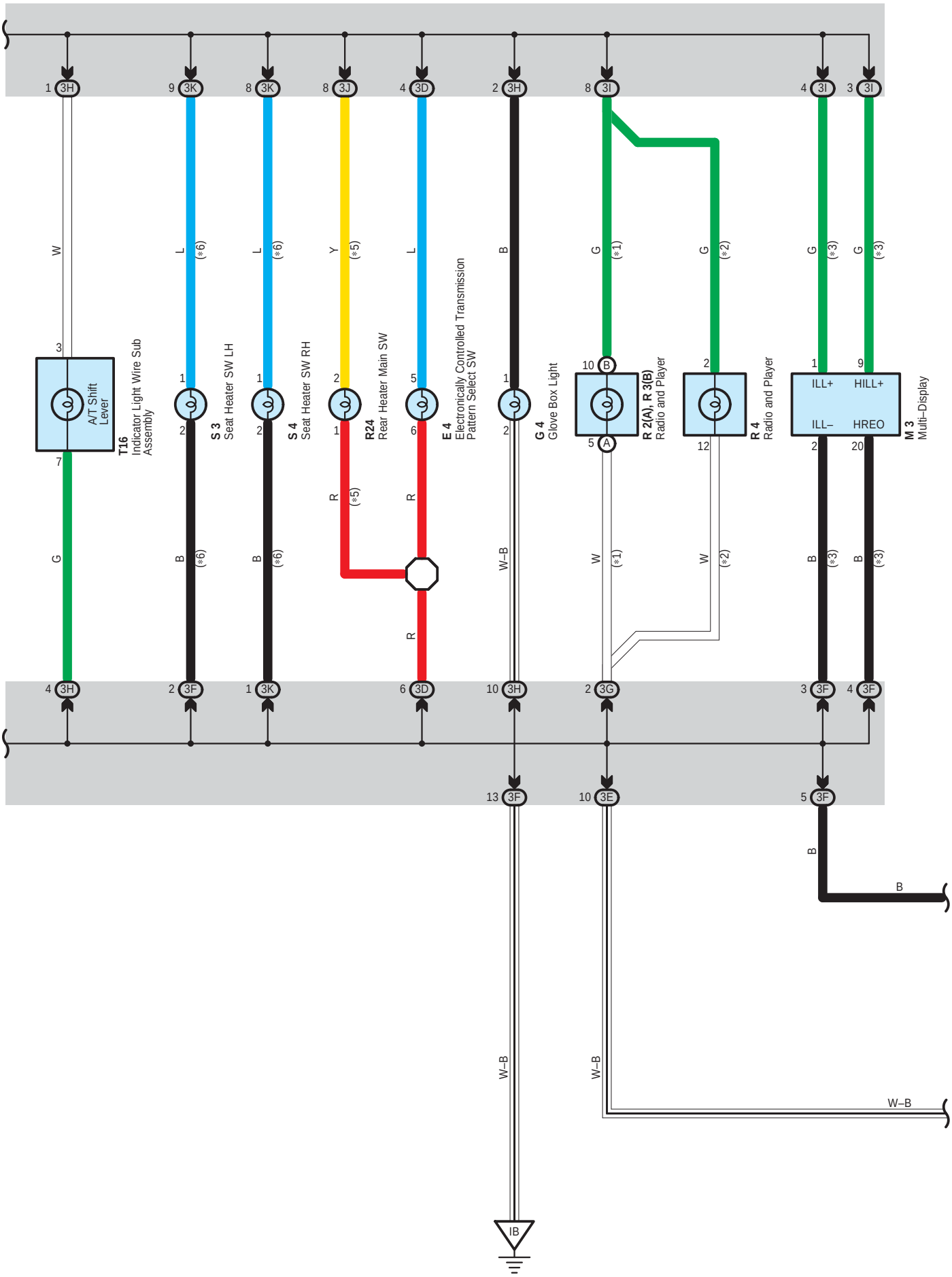
1 3H
9 3K
8 3K
8 3J
4 3D
2 3H
8 3I
4 3I
3 3I
W
L (*6)
L (*6)
Y (*5)
L
B
G (*1)
G (*2)
G (*3)
G (*3)
3
A/T Shift Lever
T16 Indicator Light Wire Sub Assembly
7
G
1
2
S 3 Seat Heater SW LH
B (*6)
1
2
S 4 Seat Heater SW RH
B (*6)
2
1
R24 Rear Heater Main SW
R (*5)
R
5
6
E 4 Electronically Controlled Transmission Pattern Select SW
R
1
2
G 4 Glove Box Light
W–B
10 B
5 A
R 2(A), R 3(B) Radio and Player
W (*1)
2
12
R 4 Radio and Player
W (*2)
1
9
ILL+
HILL+
ILL–
HREO
M 3 Multi–Display
2
20
B (*3)
B (*3)
4 3H
2 3F
1 3K
6 3D
10 3H
2 3G
3 3F
4 3F
13 3F
10 3E
5 3F
B
B
W–B
W–B
W–B
IB

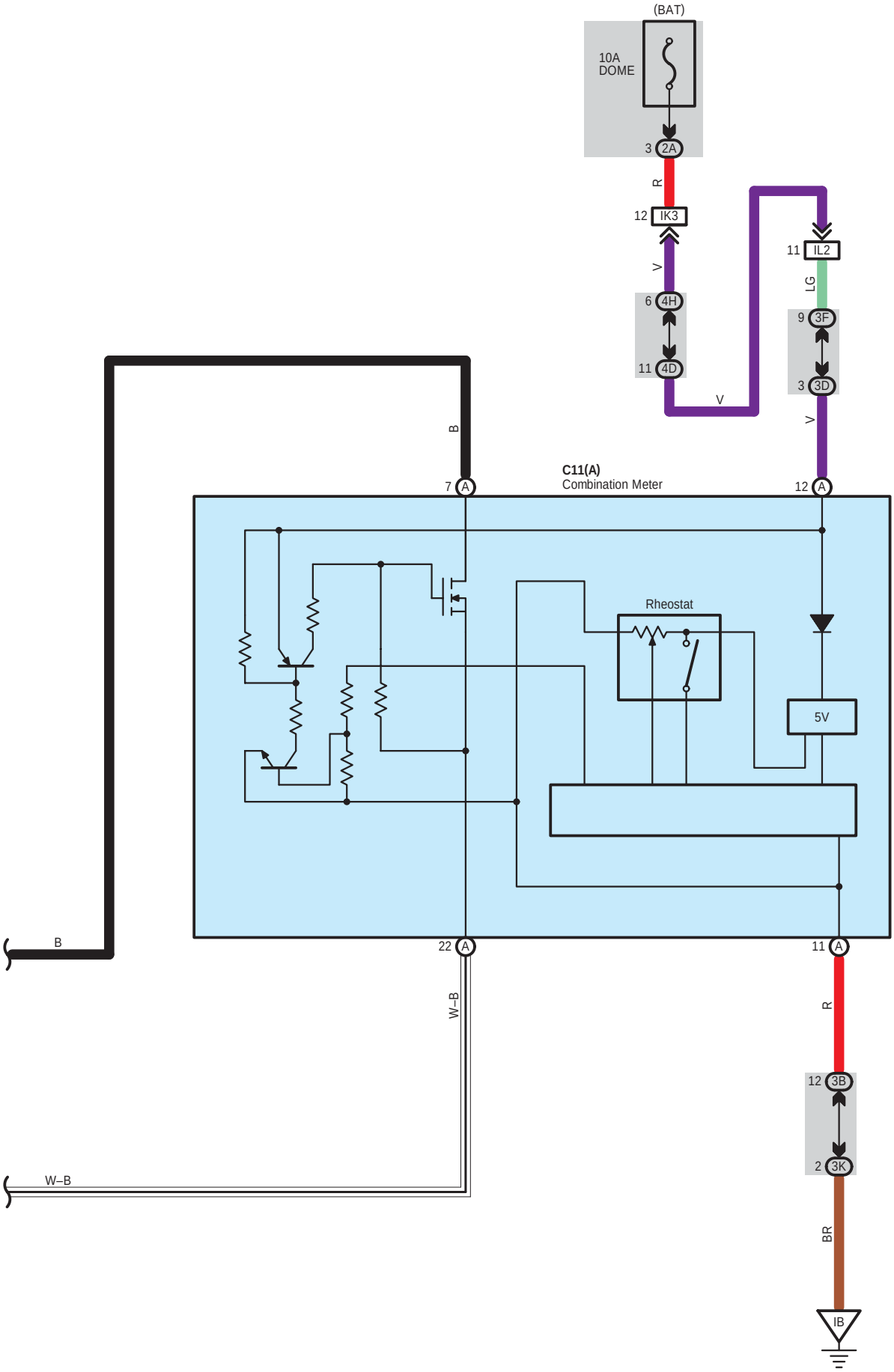
(BAT)
10A
DOME
3 2A
R
12 IK3
V
6 4H
11 4D
V
11 IL2
LG
9 3F
3 3D
V
B
7 A
C11(A)
Combination Meter
12 A
Rheostat
5V
B
22 A
W–B
11 A
R
12 3B
2 3K
BR
IB
W–B

: Parts Location

Code	See Page	Code	See Page	Code	See Page
A10	42	E4	42	R3 B	43
A22	42	F7	38 (3MZ–FE)	R4	43
B9 A	42		40 (2AZ–FE)	R23	43
B10 B	42	G4	43	R24	43
C10	42	J19	44	R26	45
C11 A	42	M2	43	S3	43
C13	42	M3	43	S4	43
C16	42	R2 A	43	T16	43

: Junction Block and Wire Harness Connector

Code	See Page	Junction Block and Wire Harness (Connector Location)
1A	29	Engine Room Main Wire and Instrument Panel J/B (Lower Finish Panel)
1D	29	Cowl Wire and Instrument Panel J/B (Lower Finish Panel)
1J	28	Instrument Panel Wire and Instrument Panel J/B (Lower Finish Panel)
1K		
2A	27	Engine Room Main Wire and Engine Room J/B (Engine Compartment Left)
3A	30	Instrument Panel Wire and Center J/B (Behind the Instrument Panel Center)
3B		
3D		
3E		
3F		
3G	31	
3H		
3I		
3J		
3K		
4D	33	Cowl Wire and Passenger Side J/B (Right Side of Grove Box)
4H		

: Connector Joining Wire Harness and Wire Harness

Code	See Page	Joining Wire Harness and Wire Harness (Connector Location)
IK3	51	Engine Room Main Wire and Cowl Wire (Right Cowl Side Panel)
IL2	51	Instrument Panel Wire and Cowl Wire (Upper Side of Passenger Side J/B)
IR1	51	Instrument Panel Wire and Floor Wire (Under the Shift Lever)

: Ground Points

Code	See Page	Ground Points Location
IA	50	Left Cowl Side Panel
IB	50	Right Instrument Panel Brace
BB	52	Right Center Pillar
BF	52	Near the Rear Side Marker Light RH

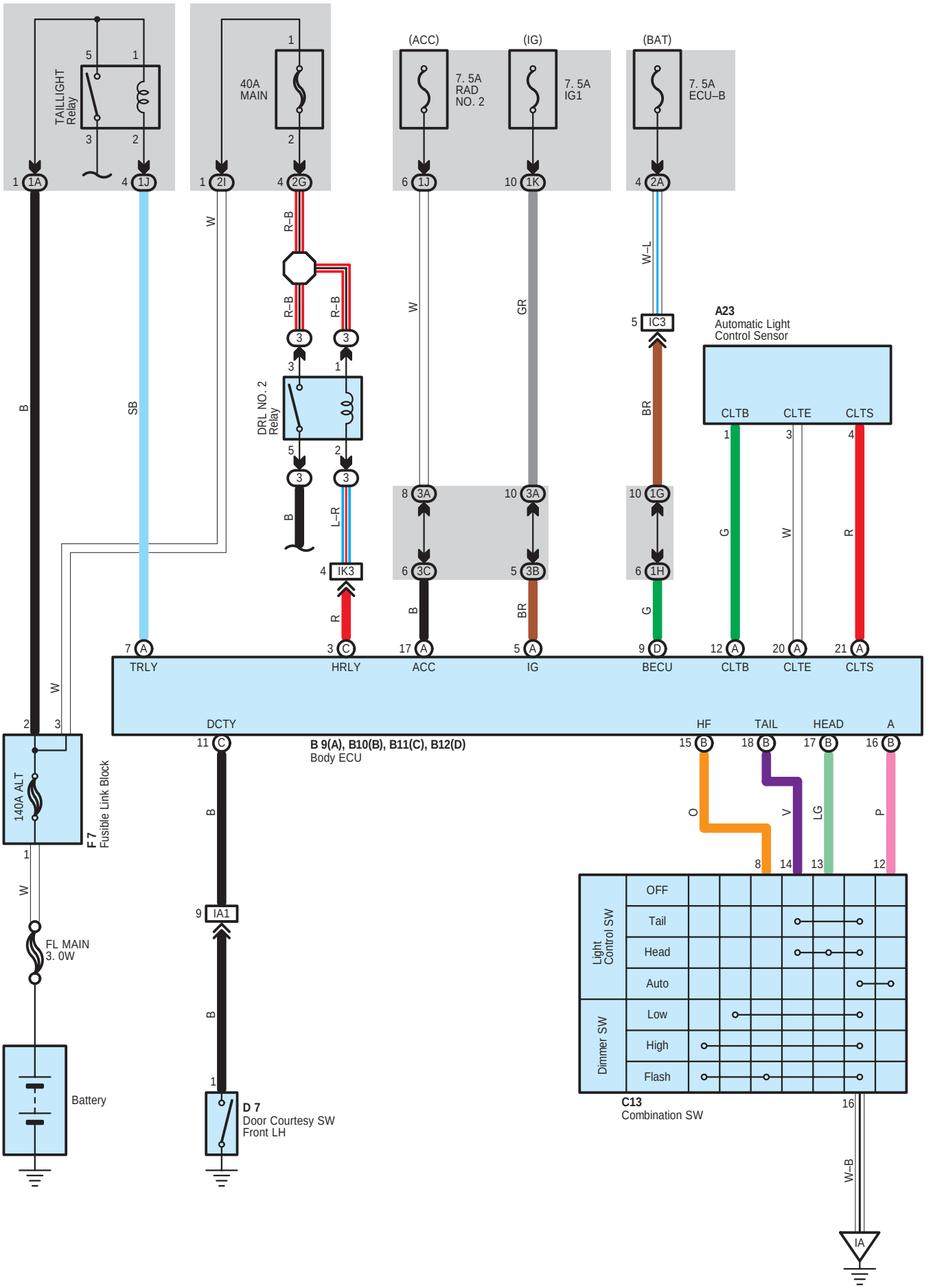
TAILLIGHT Relay
40A MAIN
(ACC)
(IG)
(BAT)
7. 5A RAD NO. 2
7. 5A IG1
7. 5A ECU–B
DRL NO. 2 Relay
A23
Automatic Light Control Sensor
CLTB
CLTE
CLTS
TRLY
HRLY
ACC
IG
BECU
DCTY
HF
TAIL
HEAD
B 9(A), B10(B), B11(C), B12(D)
Body ECU
140A ALT
F 7
Fusible Link Block
FL MAIN
3. 0W
Battery
D 7
Door Courtesy SW
Front LH
Light Control SW
Dimmer SW
OFF
Tail
Head
Auto
Low
High
Flash
C13
Combination SW
IA

System Outline

Automatic light control is designed for turning taillights and headlights on/off automatically according to the surroundings brightness when the light control SW is on AUTO position under the condition that the ignition SW is on.

Automatic Light Control Operation

When the surrounding darkens (Darker than the value set for taillight lightning), taillight is automatically turned on under the condition that the ignition SW is on with the light control SW being on AUTO position. When further darkens (Darker than the value set for headlight lightning), the headlight is automatically turned on.
In addition, if the brightness reaches the value set for turning the each light off, each light is turned off.

: Parts Location

Code		See Page	Code		See Page	Code	See Page
A23		42	B11	C	42	D7	44
B9	A	42	B12	D	42	F7	38 (3MZ–FE)
B10	B	42	C13		42		40 (2AZ–FE)

: Relay Blocks

Code	See Page	Relay Blocks (Relay Block Location)
3	23	Engine Room R/B No.3 (Engine Compartment Rear Left)

: Junction Block and Wire Harness Connector

Code	See Page	Junction Block and Wire Harness (Connector Location)
1A	29	Engine Room Main Wire and Instrument Panel J/B (Lower Finish Panel)
1G	29	Cowl Wire and Instrument Panel J/B (Lower Finish Panel)
1H		
1J	28	Instrument Panel Wire and Instrument Panel J/B (Lower Finish Panel)
1K		
2A	27	Engine Room Main Wire and Engine Room J/B (Engine Compartment Left)
2G		
2I		
3A	30	Instrument Panel Wire and Center J/B (Behind the Instrument Panel Center)
3B		
3C		

: Connector Joining Wire Harness and Wire Harness

Code	See Page	Joining Wire Harness and Wire Harness (Connector Location)
IA1	50	Cowl Wire and Floor No.2 Wire (Left Kick Panel)
IC3	50	Engine Room Main Wire and Cowl Wire (Left Cowl Side Panel)
IK3	51	Engine Room Main Wire and Cowl Wire (Right Cowl Side Panel)

: Ground Points

Code	See Page	Ground Points Location
IA	50	Left Cowl Side Panel

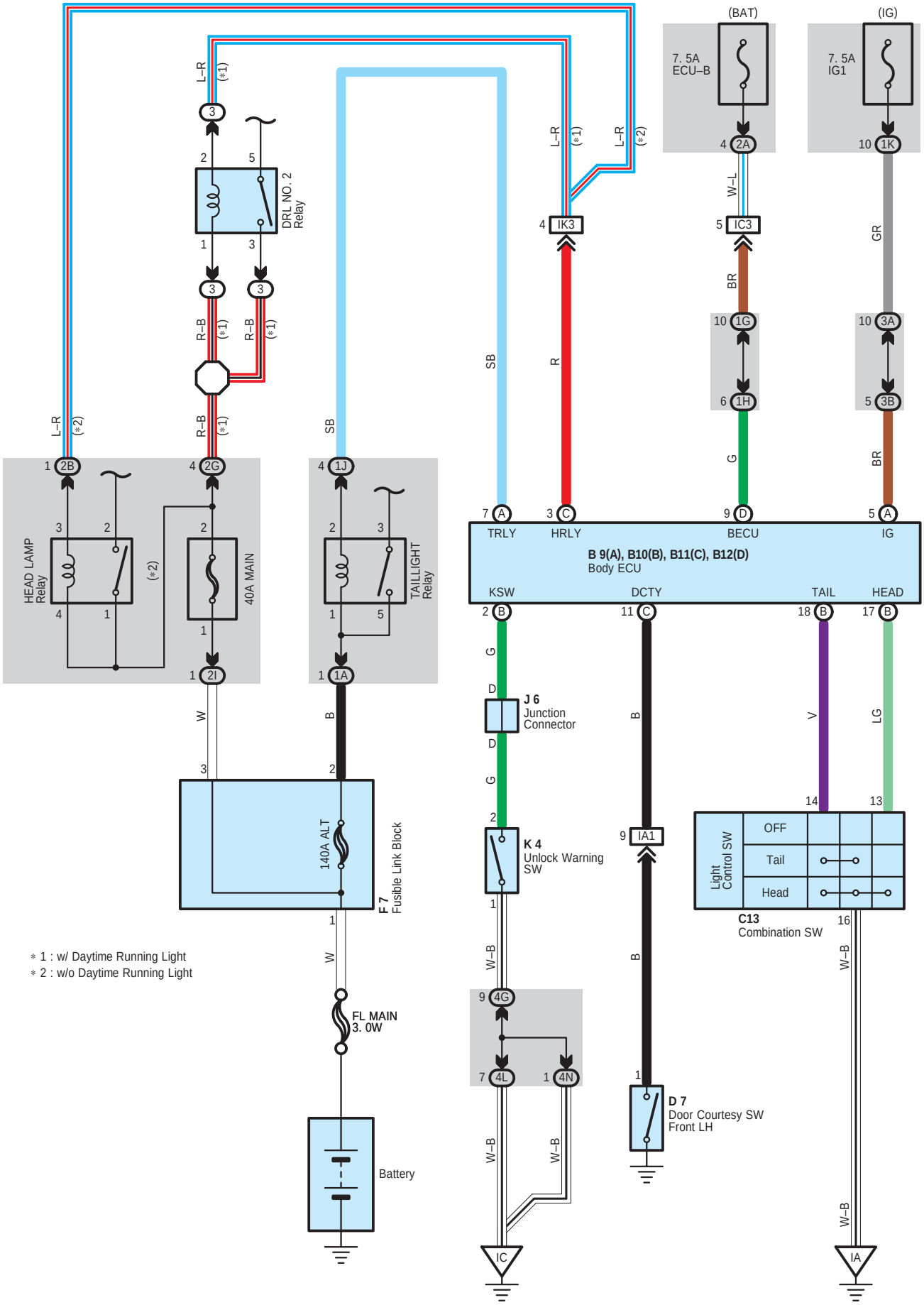
(BAT)
(IG)
7. 5A
ECU–B
7. 5A
IG1
DRL NO. 2
Relay
HEAD LAMP
Relay
40A MAIN
TAILLIGHT
Relay
140A ALT
F 7
Fusible Link Block
FL MAIN
3. 0W
Battery
TRLY
HRLY
BECU
IG
B 9(A), B10(B), B11(C), B12(D)
Body ECU
KSW
DCTY
TAIL
HEAD
J 6
Junction
Connector
K 4
Unlock Warning
SW
D 7
Door Courtesy SW
Front LH
Light
Control SW
OFF
Tail
Head
C13
Combination SW
IC
IA
L–R
R–B
SB
R
W–L
BR
GR
G
W
B
V
LG
W–B
(*1)
(*2)
∗ 1 : w/ Daytime Running Light
∗ 2 : w/o Daytime Running Light

System Outline

With the ignition SW turned on, the current flows to TERMINAL (A) 5 of the body ECU through IG1 fuse.
Voltage is applied at all times to TERMINAL (A) 7 of the body ECU through the TAILLIGHT relay. Coil side, and to TERMINAL (C) 3 through the HEAD LAMP relay coil side (w/o daytime running light) or through the DRL NO.2 relay (w/ daytime running light).

1. Normal Lighting Operation

<Turn taillight on>
With the light control SW turned to TAIL position, a signal is input into TERMINAL (B) 18 of the body ECU. Due to this signal, the current flowing to TERMINAL (A) 7 of the body ECU flows to TERMINAL (B) 18 to TERMINAL 14 of the light control SW to TERMINAL 16 to GROUND, and TAILLIGHT relay causes taillights to turn on.

<Turn headlight on>
With the light control SW turned to HEAD position, a signal is input into TERMINALS (B) 17 and (B) 18 of the body ECU. Due to this signal, the current flowing to TERMINAL (C) 3 of the body ECU flows to TERMINAL (B) 17 to TERMINAL 13 of the light control SW to TERMINAL 16 to GROUND in the headlight circuit, and causes TAILLIGHT and HEAD LAMP (w/o daytime running light) or DRL NO.2 relay (w/ daytime running light) to turn the lights on. The taillight circuit is same as above.

2. Light Auto Turn Off Operation

With light on and ignition SW turned off (Input signal goes to TERMINAL (A) 5 of the body ECU), when the driver's door is opened (Input signal goes to TERMINAL (C) 11 of the body ECU), the ECU operates and the current is cut off which flows from TERMINAL (A) 7 of the body ECU to TERMINAL (B) 18 in taillight circuit and from TERMINAL (C) 3 to TERMINAL (B) 17 in headlight circuit.
As a result, all lights are turned off automatically.

: Parts Location

Code		See Page	Code	See Page	Code	See Page
B9	A	42	C13	42	J6	43
B10	B	42	D7	44	K4	43
B11	C	42	F7	38 (3MZ–FE)		
B12	D	42		40 (2AZ–FE)		

: Relay Blocks

Code	See Page	Relay Blocks (Relay Block Location)
3	23	Engine Room R/B No.3 (Engine Compartment Rear Left)

: Junction Block and Wire Harness Connector

Code	See Page	Junction Block and Wire Harness (Connector Location)
1A	29	Engine Room Main Wire and Instrument Panel J/B (Lower Finish Panel)
1G	29	Cowl Wire and Instrument Panel J/B (Lower Finish Panel)
1H		
1J	28	Instrument Panel Wire and Instrument Panel J/B (Lower Finish Panel)
1K		
2A	27	Engine Room Main Wire and Engine Room J/B (Engine Compartment Left)
2B		
2G		
2I		
3A	30	Instrument Panel Wire and Center J/B (Behind the Instrument Panel Center)
3B		
4G	33	Cowl Wire and Passenger Side J/B (Right Side of Grove Box)
4L	32	
4N		

: Connector Joining Wire Harness and Wire Harness

Code	See Page	Joining Wire Harness and Wire Harness (Connector Location)
IA1	50	Cowl Wire and Floor No.2 Wire (Left Kick Panel)
IC3	50	Engine Room Main Wire and Cowl Wire (Left Cowl Side Panel)
IK3	51	Engine Room Main Wire and Cowl Wire (Right Cowl Side Panel)

Light Auto Turn Off System

▽ : **Ground Points**

Code	See Page	Ground Points Location
IA	50	Left Cowl Side Panel
IC	50	Right Cowl Side Panel

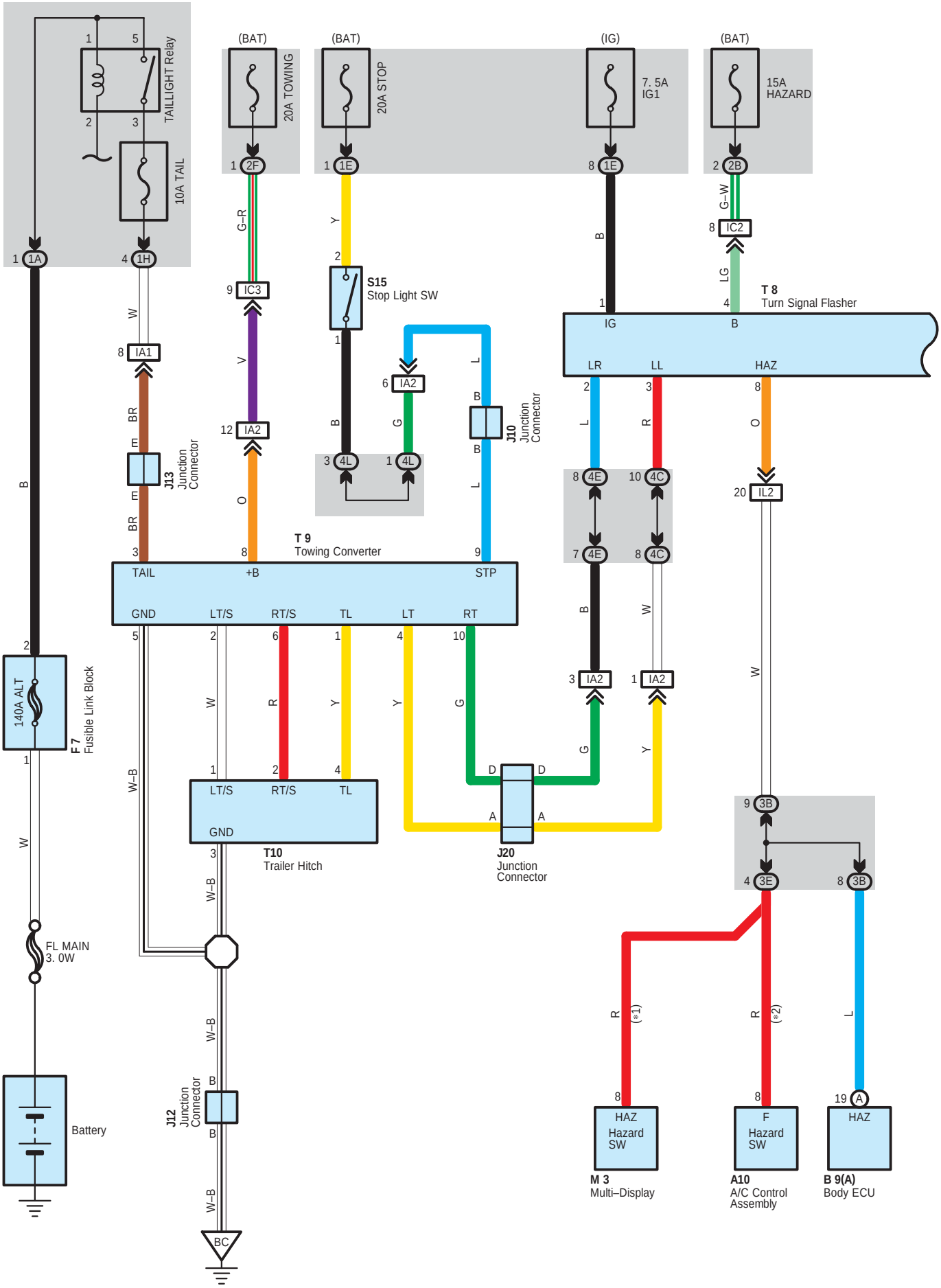
TAILLIGHT Relay
10A TAIL
(BAT)
20A TOWING
(BAT)
20A STOP
(IG)
7. 5A
IG1
(BAT)
15A
HAZARD
S15
Stop Light SW
T 8
Turn Signal Flasher
J13
Junction
Connector
J10
Junction
Connector
T 9
Towing Converter
TAIL
+B
STP
GND
LT/S
RT/S
TL
LT
RT
LR
LL
HAZ
IG
B
F 7
Fusible Link Block
140A ALT
FL MAIN
3. 0W
Battery
J12
Junction
Connector
T10
Trailer Hitch
J20
Junction
Connector
M 3
Multi–Display
A10
A/C Control
Assembly
B 9(A)
Body ECU
HAZ
Hazard
SW
F
Hazard
SW
HAZ
BC

* 1 : w/ Navigation System
* 2 : w/o Navigation System

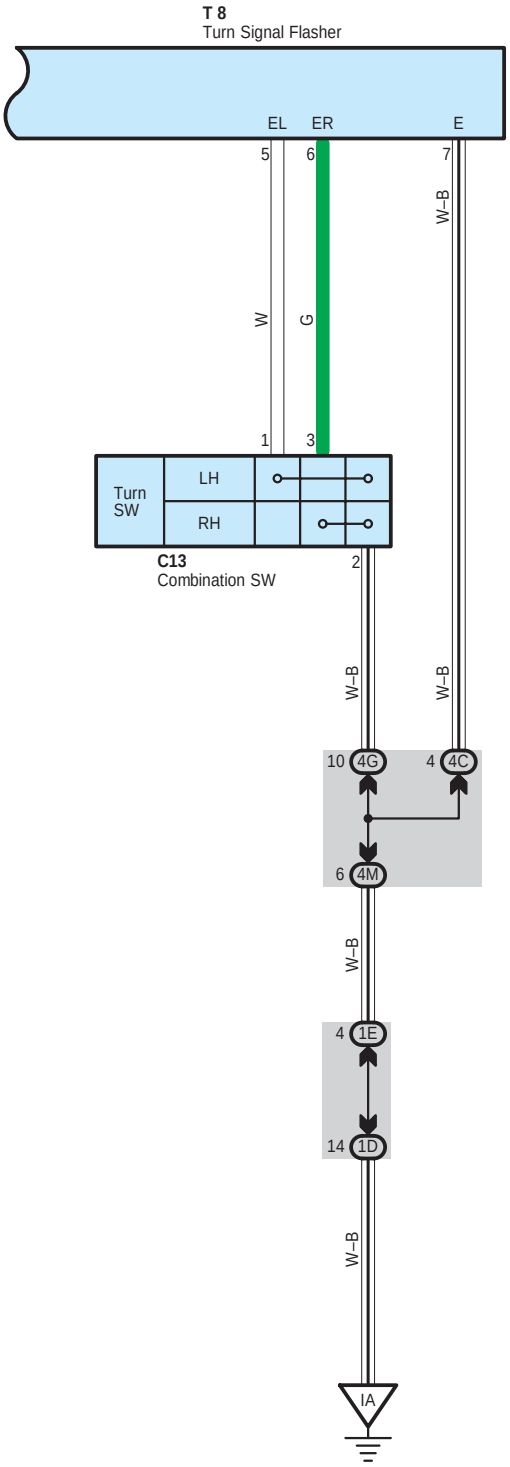

○ : Parts Location

Code	See Page	Code	See Page	Code	See Page
A10	42	J10	44	S15	43
B9 A	42	J12	44	T8	43
C13	42	J13	44	T9	45
F7	38 (3MZ–FE)	J20	43	T10	45
	40 (2AZ–FE)	M3	43		

⬭ : Junction Block and Wire Harness Connector

Code	See Page	Junction Block and Wire Harness (Connector Location)
1A	29	Engine Room Main Wire and Instrument Panel J/B (Lower Finish Panel)
1D	29	Cowl Wire and Instrument Panel J/B (Lower Finish Panel)
1E		
1H		
2B	27	Engine Room Main Wire and Engine Room J/B (Engine Compartment Left)
2F		
3B	30	Instrument Panel Wire and Center J/B (Behind the Instrument Panel Center)
3E		
4C	33	Cowl Wire and Passenger Side J/B (Right Side of Grove Box)
4E		
4G		
4L	32	
4M		

▭ : Connector Joining Wire Harness and Wire Harness

Code	See Page	Joining Wire Harness and Wire Harness (Connector Location)
IA1	50	Cowl Wire and Floor No.2 Wire (Left Kick Panel)
IA2		
IC2	50	Engine Room Main Wire and Cowl Wire (Left Cowl Side Panel)
IC3		
IL2	51	Instrument Panel Wire and Cowl Wire (Upper Side of Passenger Side J/B)

▽ : Ground Points

Code	See Page	Ground Points Location
IA	50	Left Cowl Side Panel
BC	52	Left Side of Rear Cross Member

NOTICE: When inspecting or repairing the SRS, perform service in accordance with the following precautionary instructions and the procedure, and precautions in the Repair Manual applicable for the model year.

- Malfunction symptoms of the SRS are difficult to confirm, so the DTCs become the most important source of information when troubleshooting. When troubleshooting the SRS, always inspect the DTCs before disconnecting the battery.
- **Work must be started more than 90 seconds after the ignition SW is turned to the "LOCK" position and the negative (–) terminal cable is disconnected from the battery.**
  (The SRS is equipped with a back–up power source so that if work is started within 90 seconds from disconnecting the negative (–) terminal cable of the battery, the SRS may deploy.)
- When the negative (–) terminal cable is disconnected from the battery, the memory of the clock and audio system will be cleared. So before starting work, make a record of the contents in the audio memory system. When work is finished, reset the audio systems as they were before and adjust the clock. Some vehicles have power tilt steering, power telescopic steering, power seat and power outside rear view mirror which are all equipped with memory function. However, it is not possible to make a record of these memory contents. So when the work is finished, it will be necessary to explain it to your customer, and ask the customer to adjust the features and reset the memory. To avoid erasing the memory in each system, never use a back–up power supply from outside the vehicle.
- Before repair, remove the airbag sensor if shocks are likely to be applied to the sensor during repair.
- Do not expose the following parts directly to hot air or flame;
- Even in cases of a minor collision where the SRS does not deploy, the following parts should be inspected;
- Never use SRS parts from another vehicle. When replacing parts, replace with new parts.
- For the purpose of reuse, never disassemble and repair the following parts.
- If the following parts have been dropped, or have cracks, dents and other defects in their case, bracket, and connector, replace with new one.
- Use a volt/ohmmeter with high impedance (10 kΩ/V minimum) for troubleshooting electrical circuits of the system.
- Information labels are attached to the periphery of the SRS components. Follow the instructions of the notice.
- After work on the SRS is completed, check the SRS warning light.
- If the vehicle is equipped with a mobile communication system, refer to the precaution in the IN section of the Repair Manual.

* Steering wheel pad
* Front passenger airbag assembly
* Side airbag assembly
* Curtain shield airbag assembly
* Seat belt pretensioner
* Center airbag sensor assembly
* Front airbag sensor assembly
* Side airbag sensor assembly
* Rear airbag sensor assembly

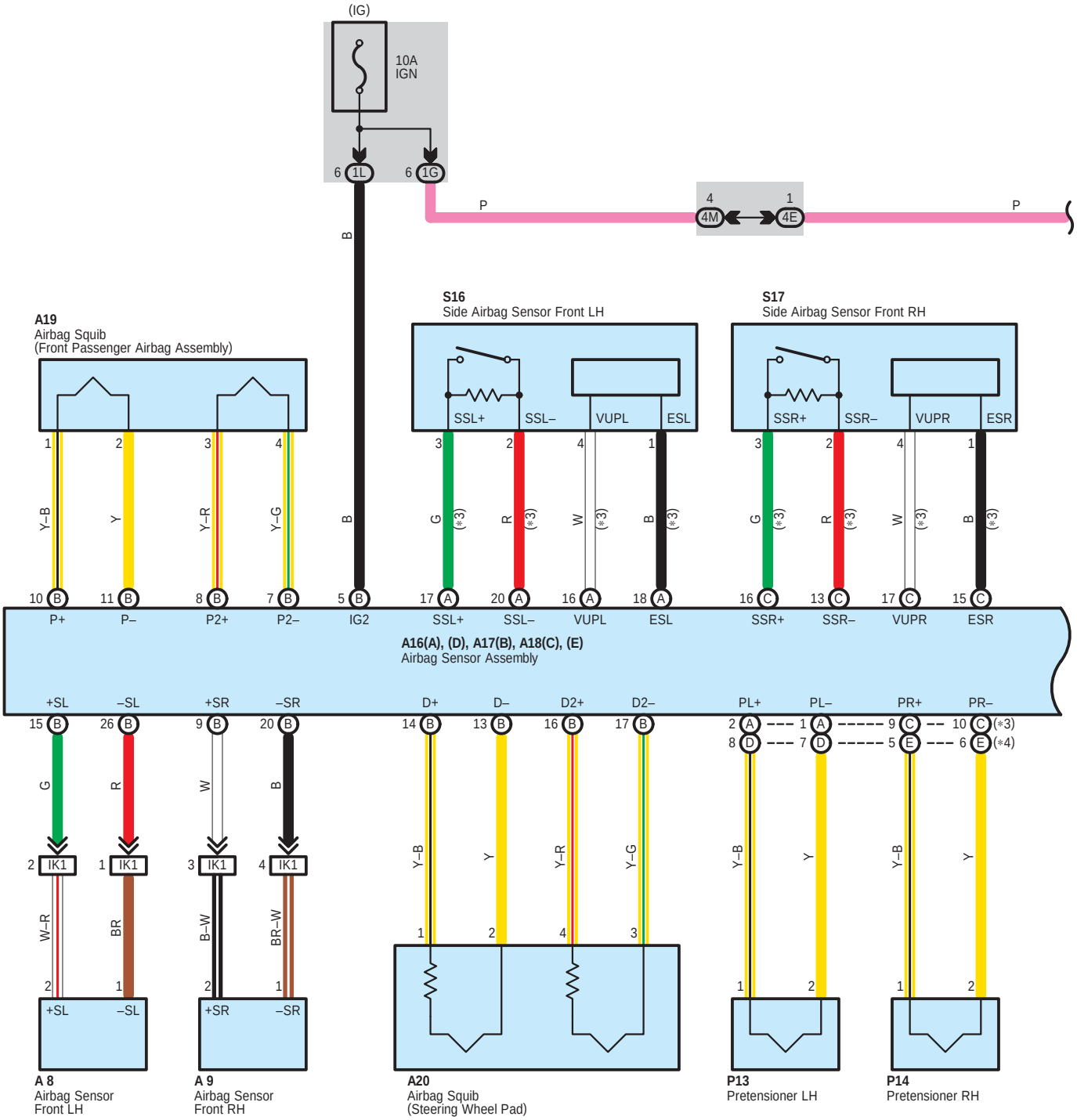
(IG)
10A
IGN
6 1L
6 1G
B
P
4 4M
1 4E
P
S16
Side Airbag Sensor Front LH
S17
Side Airbag Sensor Front RH
A19
Airbag Squib
(Front Passenger Airbag Assembly)
SSL+
SSL–
VUPL
ESL
SSR+
SSR–
VUPR
ESR
Y–B
Y
Y–R
Y–G
G
R
W
B
(*3)
10 B P+
11 B P–
8 B P2+
7 B P2–
5 B IG2
17 A SSL+
20 A SSL–
16 A VUPL
18 A ESL
16 C SSR+
13 C SSR–
17 C VUPR
15 C ESR
A16(A), (D), A17(B), A18(C), (E)
Airbag Sensor Assembly
+SL
–SL
+SR
–SR
D+
D–
D2+
D2–
PL+
PL–
PR+
PR–
15 B
26 B
9 B
20 B
14 B
13 B
16 B
17 B
2 A
1 A
9 C
10 C (*3)
8 D
7 D
5 E
6 E (*4)
G
R
W
B
Y–B
Y
Y–R
Y–G
2 IK1
1 IK1
3 IK1
4 IK1
W–R
BR
B–W
BR–W
2
1
+SL
–SL
+SR
–SR
A 8
Airbag Sensor
Front LH
A 9
Airbag Sensor
Front RH
A20
Airbag Squib
(Steering Wheel Pad)
P13
Pretensioner LH
P14
Pretensioner RH

∗ 1 : w/ Rear Seat Entertainment System
∗ 2 : w/o Rear Seat Entertainment System
∗ 3 : w/ Curtain Shield Airbag
∗ 4 : w/o Curtain Shield Airbag

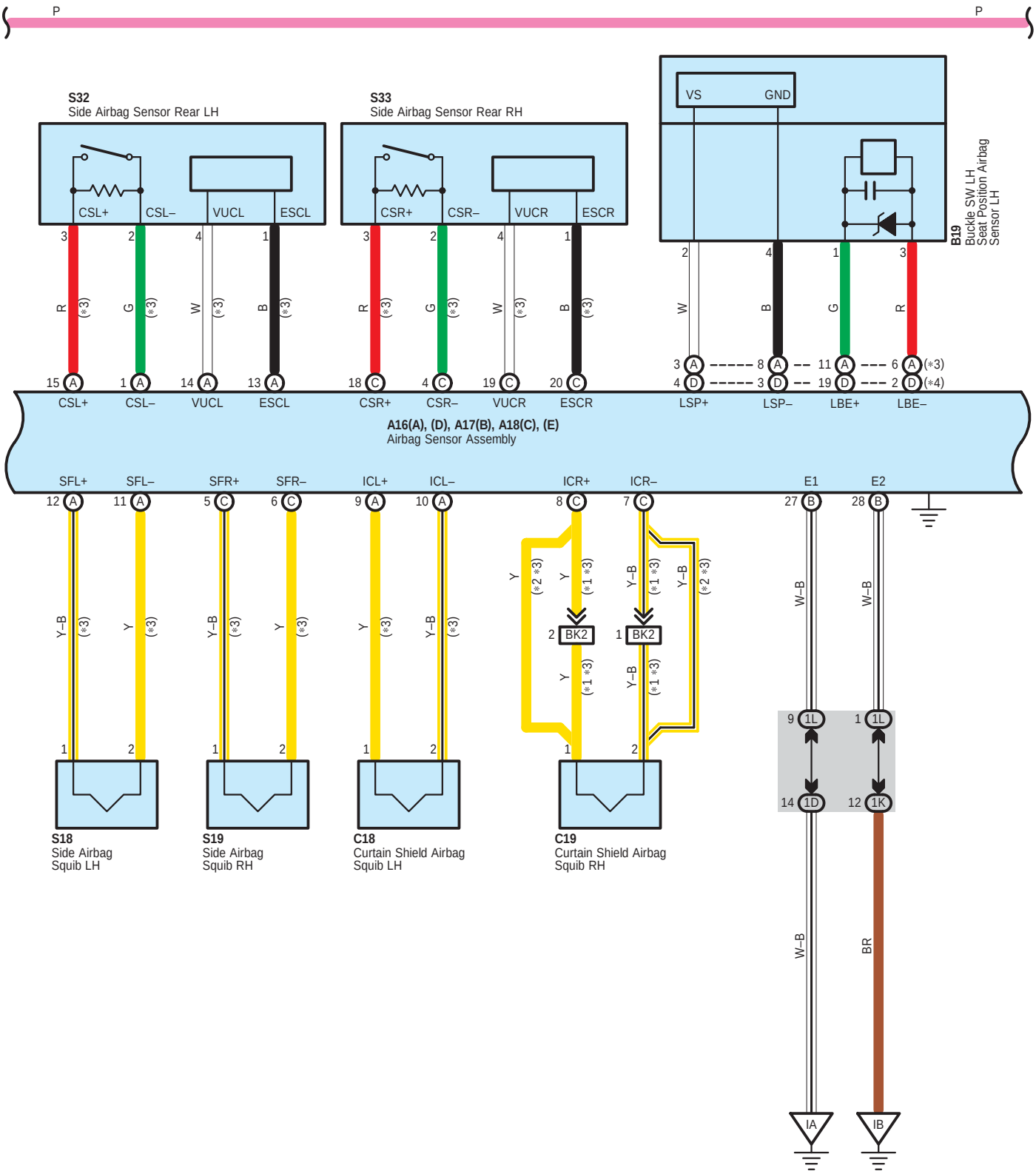

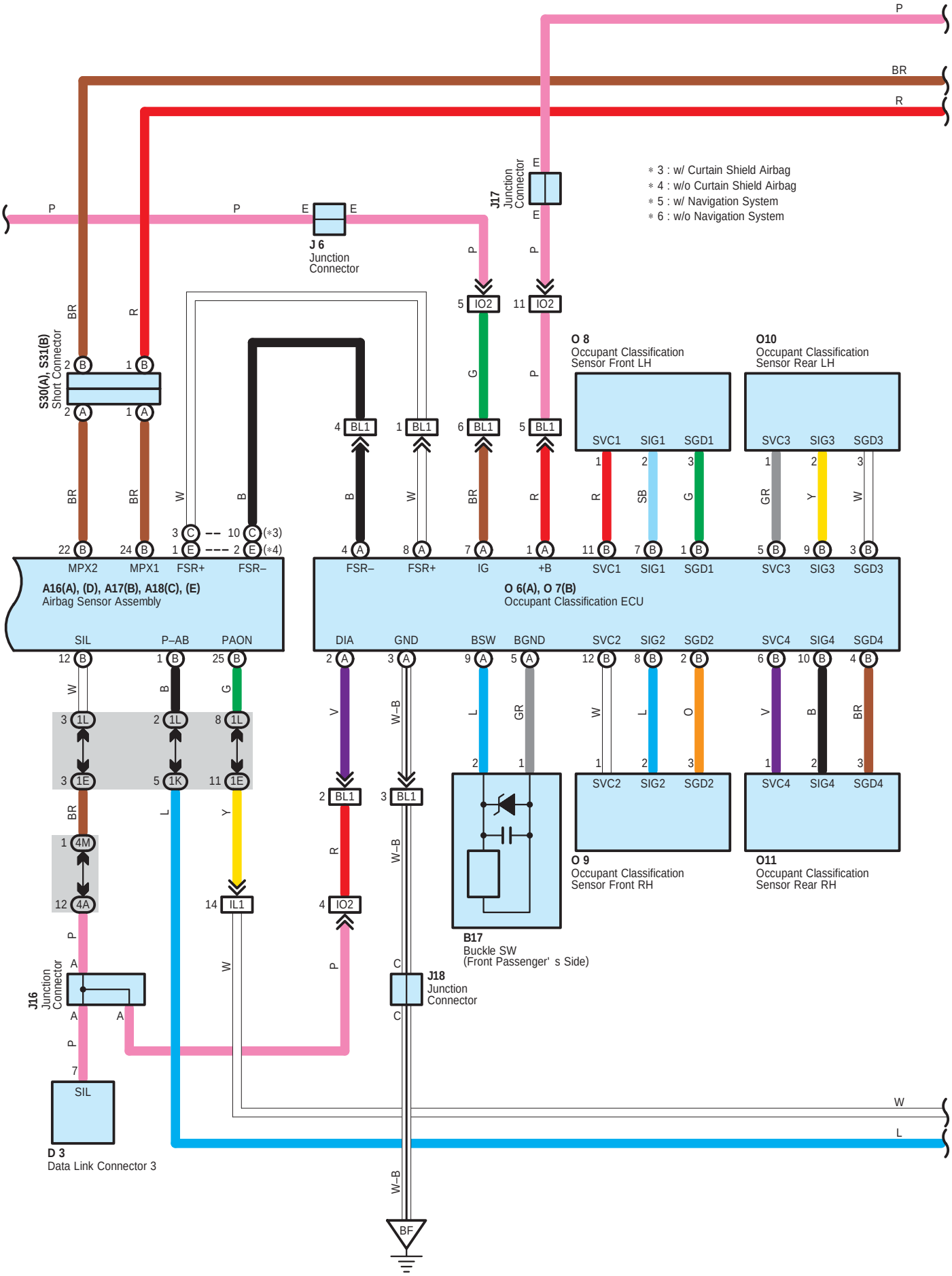
P
BR
R
J17 Junction Connector
E
E
P
P
P
P
E
E
J 6
Junction
Connector
* 3 : w/ Curtain Shield Airbag
* 4 : w/o Curtain Shield Airbag
* 5 : w/ Navigation System
* 6 : w/o Navigation System
5 IO2
11 IO2
S30(A), S31(B)
Short Connector
BR
R
2 B
1 B
2 A
1 A
BR
BR
W
B
4 BL1
1 BL1
6 BL1
5 BL1
G
P
BR
R
O 8
Occupant Classification
Sensor Front LH
O10
Occupant Classification
Sensor Rear LH
SVC1 SIG1 SGD1
SVC3 SIG3 SGD3
1 2 3
R SB G
GR Y W
11 B 7 B 1 B
5 B 9 B 3 B
3 C -- 10 C (*3)
1 E --- 2 E (*4)
22 B 24 B
4 A 8 A 7 A 1 A
MPX2 MPX1 FSR+ FSR–
FSR– FSR+ IG +B
SVC1 SIG1 SGD1
SVC3 SIG3 SGD3
A16(A), (D), A17(B), A18(C), (E)
Airbag Sensor Assembly
O 6(A), O 7(B)
Occupant Classification ECU
SIL P–AB PAON
DIA GND BSW BGND SVC2 SIG2 SGD2 SVC4 SIG4 SGD4
12 B 1 B 25 B
2 A 3 A 9 A 5 A 12 B 8 B 2 B 6 B 10 B 4 B
W B G
V W–B L GR W L O V B BR
3 1L 2 1L 8 1L
3 1E 5 1K 11 1E
2 BL1 3 BL1
BR L Y
R W–B
1 4M
12 4A
14 IL1
4 IO2
P W P
2 1
1 2 3
SVC2 SIG2 SGD2
SVC4 SIG4 SGD4
O 9
Occupant Classification
Sensor Front RH
O11
Occupant Classification
Sensor Rear RH
B17
Buckle SW
(Front Passenger' s Side)
J16
Junction
Connector
A A
C C
J18
Junction
Connector
P
7
SIL
D 3
Data Link Connector 3
W
L
W–B
BF

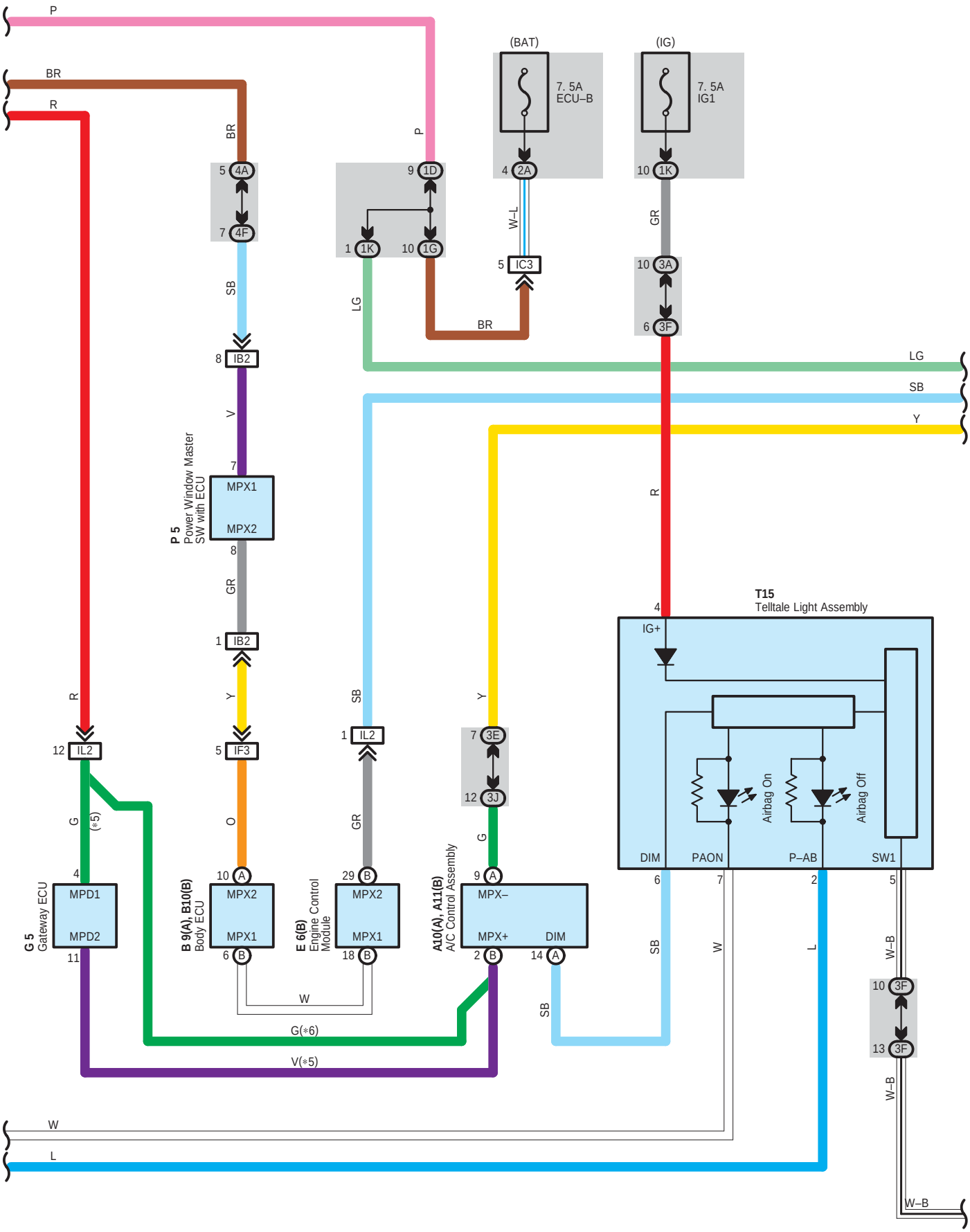
P
BR
R
(BAT)
7. 5A
ECU–B
(IG)
7. 5A
IG1
5 4A
7 4F
9 1D
1 1K
10 1G
4 2A
10 1K
W–L
GR
5 IC3
10 3A
6 3F
LG
BR
SB
8 IB2
V
7
MPX1
MPX2
P 5
Power Window Master
SW with ECU
8
GR
1 IB2
Y
5 IF3
O
R
12 IL2
G
(*5)
4
MPD1
MPD2
11
G 5
Gateway ECU
10 A
MPX2
MPX1
6 B
B 9(A), B10(B)
Body ECU
W
1 IL2
GR
29 B
MPX2
MPX1
18 B
E 6(B)
Engine Control
Module
G(*6)
V(*5)
7 3E
12 3J
G
9 A
MPX–
MPX+
DIM
2 B
14 A
A10(A), A11(B)
A/C Control Assembly
SB
T15
Telltale Light Assembly
4
IG+
Airbag On
Airbag Off
DIM
PAON
P–AB
SW1
6
7
2
5
W
L
W–B
10 3F
13 3F
W–B
W
L
W–B

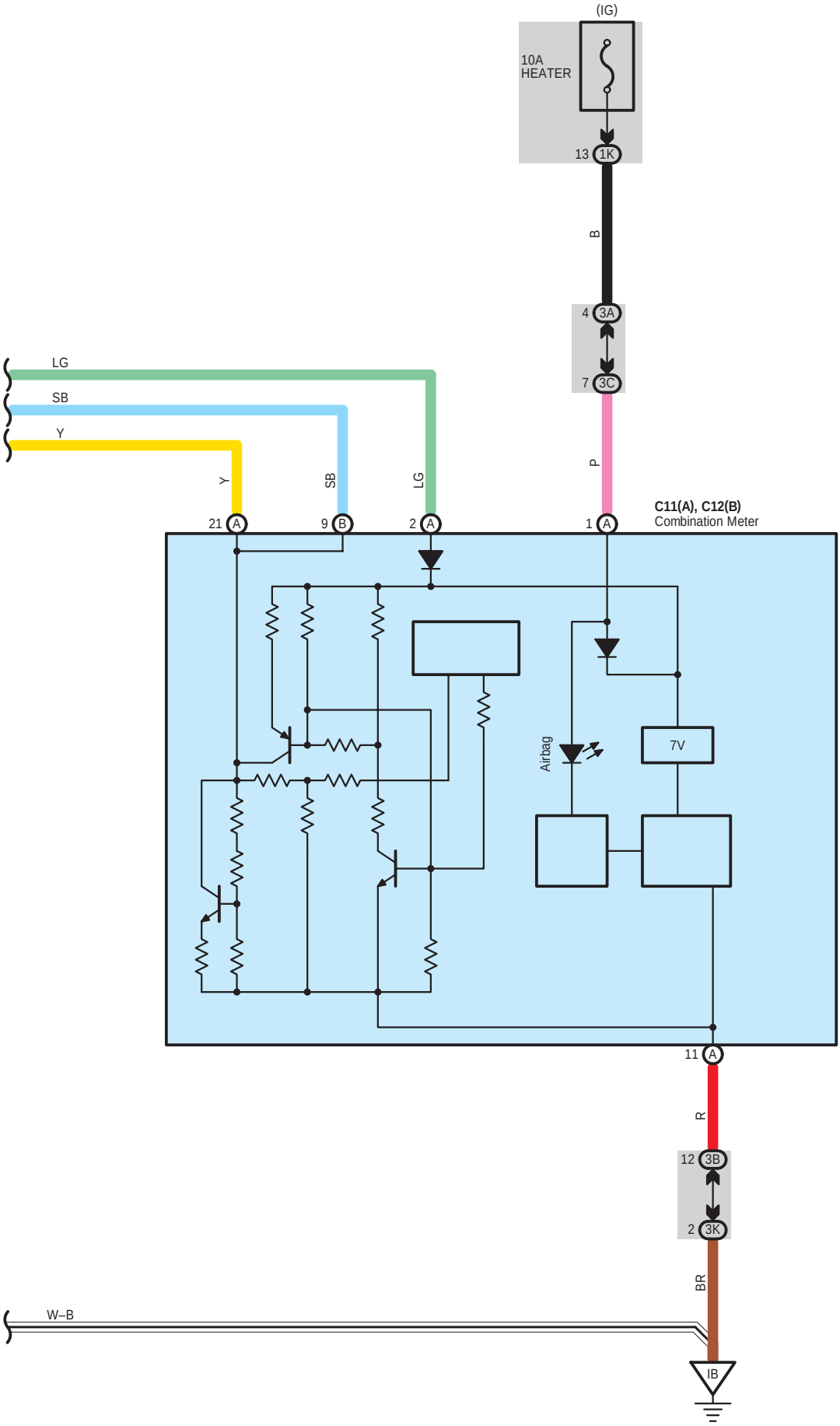
(IG)
10A
HEATER
13 1K
B
4 3A
7 3C
P
LG
SB
Y
Y
SB
LG
21 A
9 B
2 A
1 A
C11(A), C12(B)
Combination Meter
Airbag
7V
11 A
R
12 3B
2 3K
BR
W–B
IB

System Outline

The SRS is a driver and front passenger protection device which has a supplemental role to the seat belts.
When the ignition SW is turned to ON, the current from the IGN fuse flows to TERMINAL (B) 5 of the airbag sensor assembly.
If an accident occurs while driving, when the frontal impact exceeds a set level, the current from the IGN fuse flows to TERMINALS (B) 14, (B) 16, (B) 10, (B) 8, (A) 8 (w/ curtain shield airbag), or (A) 2 (w/o curtain shield airbag) and (C) 9 (w/ curtain shield airbag), or (C) 5 (w/o curtain shield airbag) of the airbag sensor assembly to the airbag squibs and the pretensioners to TERMINALS (B) 13, (B) 17, (B) 11, (B) 7, (A) 7 (w/ curtain shield airbag), or (A) 1 (w/o curtain shield airbag) and (C) 10 (w/ curtain shield airbag), or (C) 6 (w/o curtain shield airbag) of the airbag sensor assembly to TERMINAL (B) 27, (B) 28 or BODY GROUND to GROUND, so that current flows to the airbag squibs and the pretensioners and causes them to operate.
When the side impact also exceeds a set level, the current from the IGN fuse flows to TERMINALS (A) 12, (C) 5, (A) 9 and (C) 8 of the airbag sensor assembly to the side airbag squibs and the curtain shield airbag squibs TERMINALS (A) 11, (C) 6, (A) 10 and (C) 7 of the airbag sensor assembly to TERMINAL (B) 27, (B) 28 or BODY GROUND to GROUND, causing side airbag squibs and curtain shield airbag squibs to operate.
The airbag stored inside the steering wheel pad is instantaneously expanded to soften the shock to the driver.
The airbag stored inside the passenger's instrument panel is instantaneously expanded to soften the shock to the front passenger.
Side airbags are instantaneously expanded to soften the shock of side to the driver and front passenger.
The curtain shield airbag can ease an impact on the head of the front and rear passengers and reduce risks of injury.
In a head–on crash, the driver moves forward and may strike his/her lower limbs against the instrument panel, the key cylinder, etc.
The pretensioners make sure of the seat belt restrainability.

○ : Parts Location

Code		See Page	Code		See Page	Code		See Page
A8		38 (3MZ–FE)	C11	A	42	O10		46 (*1)
		40 (2AZ–FE)	C12	B	42			47 (*2)
A9		38 (3MZ–FE)	C18		44	O11		46 (*1)
		40 (2AZ–FE)	C19		44			47 (*2)
A10	A	42	D3		42	P5		44
A11	B	42	E6	B	42	P13		44
A16	A	42	G5		43	P14		44
	D	42	J6		43	S16		45
A17	B	42	J16		43	S17		45
A18	C	42	J17		43	S18		46 (*1)
	E	42	J18		44			47 (*2)
A19		42	O6	A	46 (*1)	S19		46 (*1)
A20		42			47 (*2)			47 (*2)
B9	A	42	O7	B	46 (*1)	S30	A	43
B10	B	42			47 (*2)	S31	B	43
B17		46 (*1)	O8		46 (*1)	S32		45
		47 (*2)			47 (*2)	S33		45
B19		46 (*1)	O9		46 (*1)	T15		43
		47 (*2)			47 (*2)			

* 1 : w/ Power Seat * 2 : w/o Power Seat

: Junction Block and Wire Harness Connector

Code	See Page	Junction Block and Wire Harness (Connector Location)
1D	29	Cowl Wire and Instrument Panel J/B (Lower Finish Panel)
1E		
1G		
1K	28	Instrument Panel Wire and Instrument Panel J/B (Lower Finish Panel)
1L	29	Cowl Wire and Instrument Panel J/B (Lower Finish Panel)
2A	27	Engine Room Main Wire and Engine Room J/B (Engine Compartment Left)
3A	30	Instrument Panel Wire and Center J/B (Behind the Instrument Panel Center)
3B		
3C		
3E		
3F		
3J	31	
3K		
4A	33	Cowl Wire and Passenger Side J/B (Right Side of Grove Box)
4E		
4F		
4M	32	

: Connector Joining Wire Harness and Wire Harness

Code	See Page	Joining Wire Harness and Wire Harness (Connector Location)
IB2	50	Front Door LH Wire and Cowl Wire (Left Kick Panel)
IC3	50	Engine Room Main Wire and Cowl Wire (Left Cowl Side Panel)
IF3	50	Instrument Panel Wire and Cowl Wire (Right Side of Instrument Panel J/B)
IK1	51	Engine Room Main Wire and Cowl Wire (Right Cowl Side Panel)
IL1	51	Instrument Panel Wire and Cowl Wire (Upper Side of Passenger Side J/B)
IL2		
IO2	51	Cowl Wire and Floor Wire (Right Kick Panel)
BK2	52	Roof No.2 Wire and Floor Wire (Right Rear Quarter Panel)
BL1	54 (*1)	Floor Wire and Front Seat RH Wire (Under the Front Passenger's Seat)
	55 (*2)	

: Ground Points

Code	See Page	Ground Points Location
IA	50	Left Cowl Side Panel
IB	50	Right Instrument Panel Brace
BF	52	Near the Rear Side Marker Light RH

* 1 : w/ Power Seat * 2 : w/o Power Seat

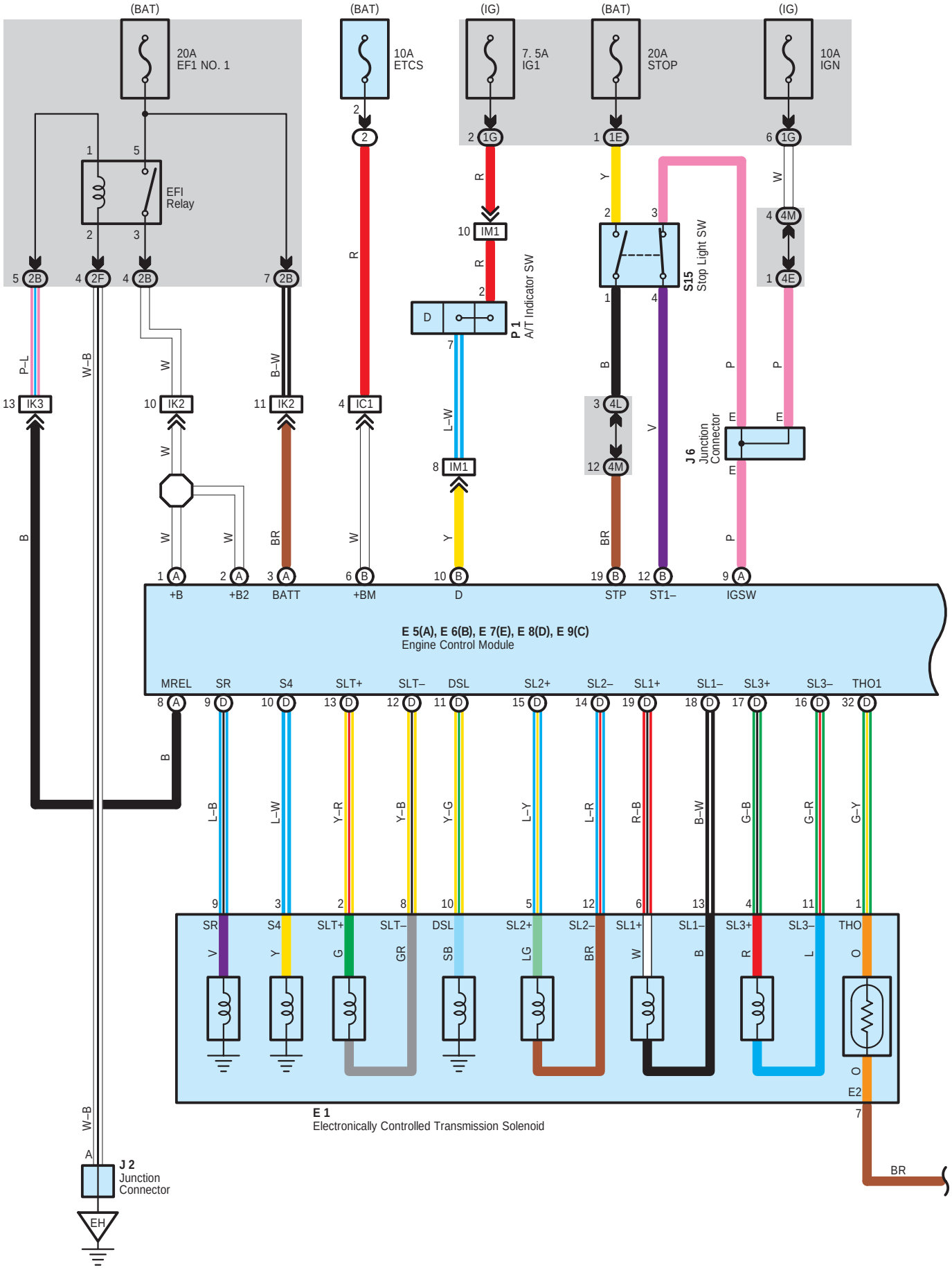
(BAT)
20A
EF1 NO. 1
EFI
Relay
(BAT)
10A
ETCS
(IG)
7. 5A
IG1
(BAT)
20A
STOP
(IG)
10A
IGN
S15
Stop Light SW
A/T Indicator SW
P 1
J 6
Junction
Connector
+B
+B2
BATT
+BM
D
STP
ST1–
IGSW
E 5(A), E 6(B), E 7(E), E 8(D), E 9(C)
Engine Control Module
MREL
SR
S4
SLT+
SLT–
DSL
SL2+
SL2–
SL1+
SL1–
SL3+
SL3–
THO1
E 1
Electronically Controlled Transmission Solenoid
THO
E2
J 2
Junction
Connector
EH

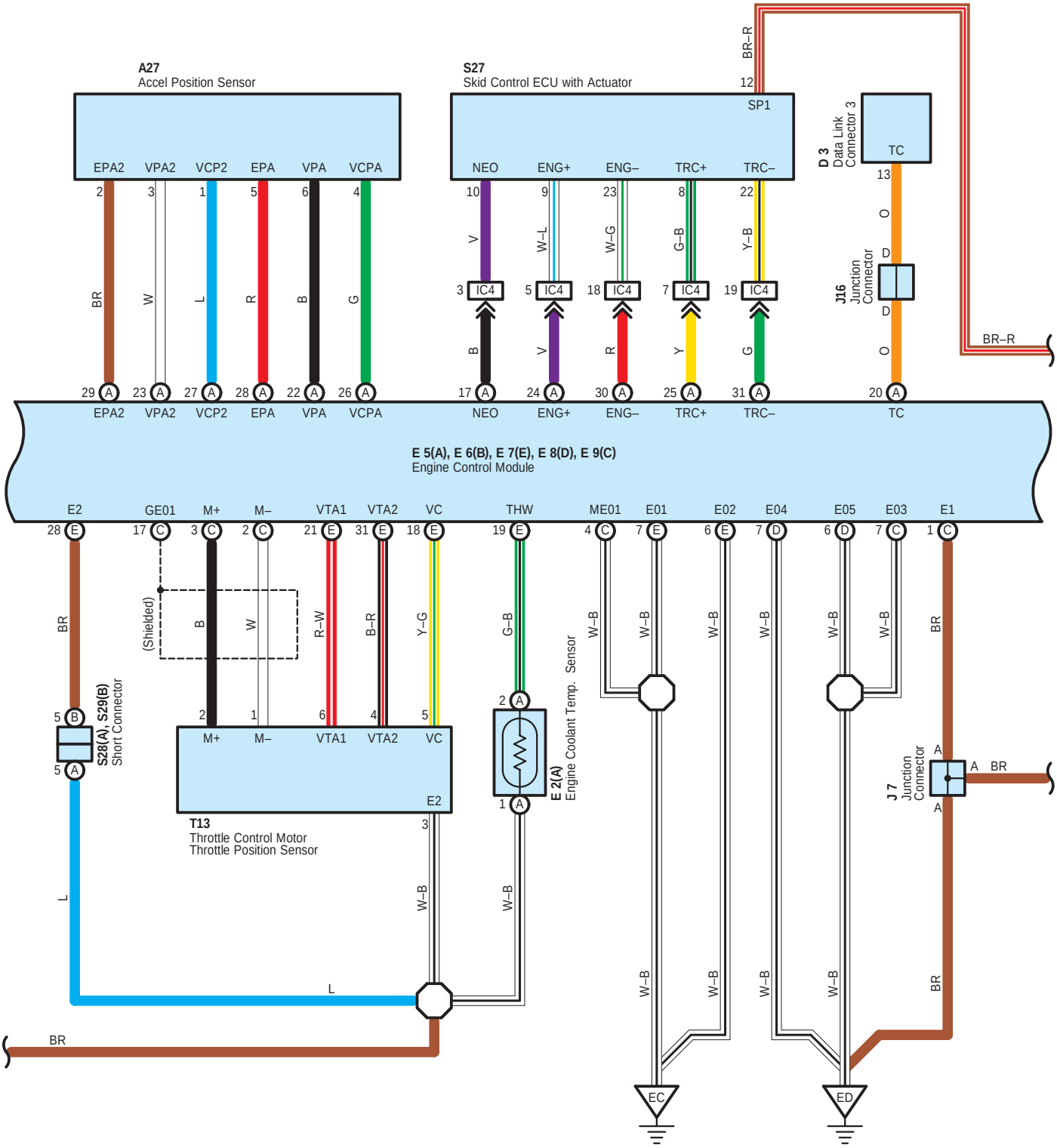
A27
Accel Position Sensor
EPA2
VPA2
VCP2
EPA
VPA
VCPA
S27
Skid Control ECU with Actuator
NEO
ENG+
ENG–
TRC+
TRC–
SP1
BR–R
D 3
Data Link
Connector 3
TC
J16
Junction
Connector
BR–R
E 5(A), E 6(B), E 7(E), E 8(D), E 9(C)
Engine Control Module
E2
GE01
M+
M–
VTA1
VTA2
VC
THW
ME01
E01
E02
E04
E05
E03
E1
(Shielded)
S28(A), S29(B)
Short Connector
T13
Throttle Control Motor
Throttle Position Sensor
E 2(A)
Engine Coolant Temp. Sensor
J 7
Junction
Connector
EC
ED
BR
L
W
B
R
G
V
W–L
W–G
G–B
Y–B
O
D
R–W
B–R
Y–G
W–B

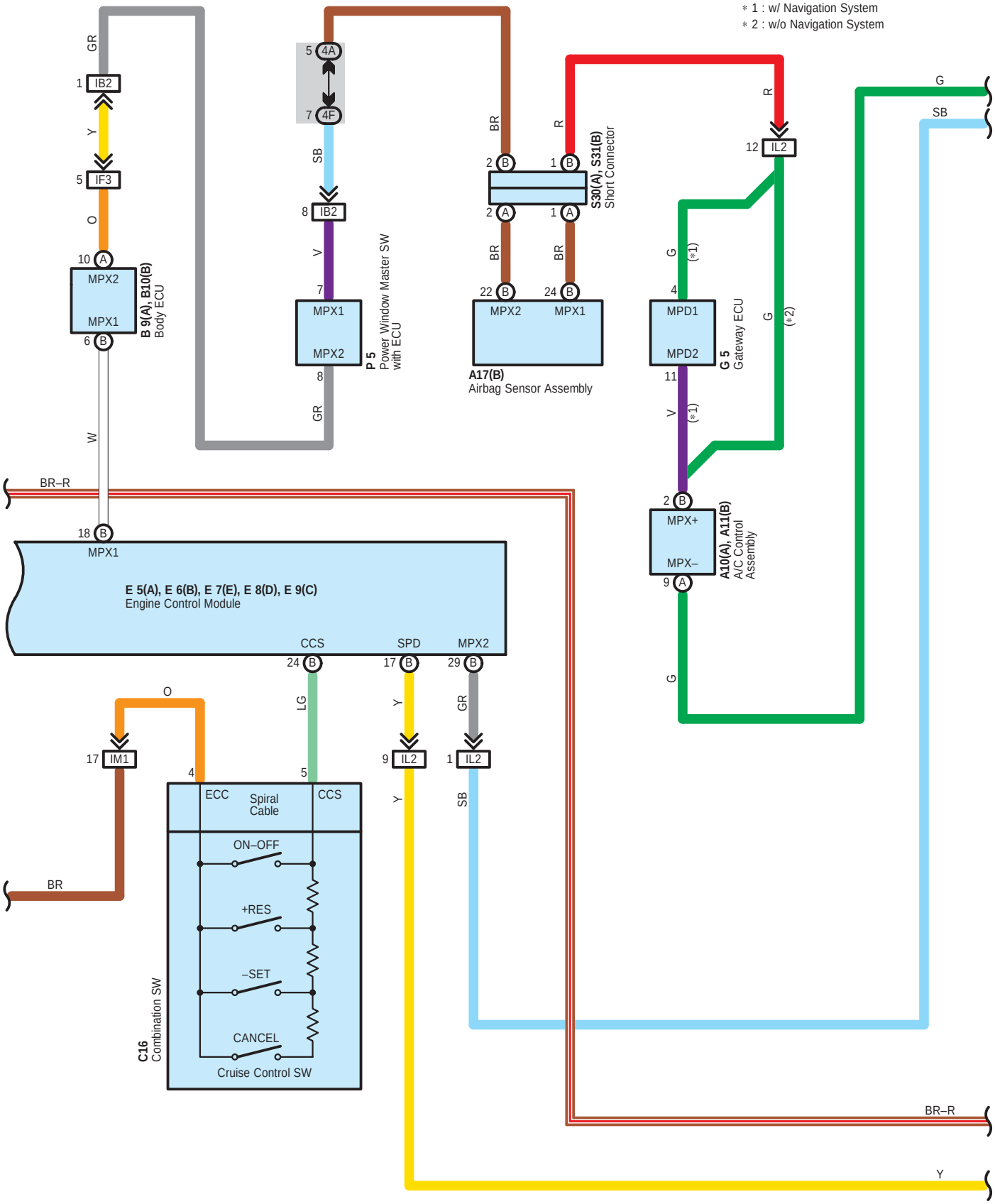
* 1 : w/ Navigation System
* 2 : w/o Navigation System
GR
1 IB2
Y
5 IF3
O
10 A
MPX2
MPX1
6 B
B 9(A), B10(B)
Body ECU
W
5 4A
7 4F
SB
8 IB2
V
7
MPX1
MPX2
8
GR
P 5
Power Window Master SW with ECU
BR
2 B
1 B
2 A
1 A
S30(A), S31(B)
Short Connector
BR
BR
22 B
24 B
MPX2
MPX1
A17(B)
Airbag Sensor Assembly
R
12 IL2
G
(*1)
4
MPD1
MPD2
11
G 5
Gateway ECU
G
(*2)
V
(*1)
2 B
MPX+
MPX–
9 A
A10(A), A11(B)
A/C Control Assembly
G
G
SB
BR–R
18 B
MPX1
E 5(A), E 6(B), E 7(E), E 8(D), E 9(C)
Engine Control Module
CCS
SPD
MPX2
24 B
17 B
29 B
LG
Y
GR
O
17 IM1
4
5
9 IL2
1 IL2
Y
SB
ECC
Spiral Cable
CCS
ON–OFF
+RES
–SET
CANCEL
Cruise Control SW
C16
Combination SW
BR
BR–R
Y

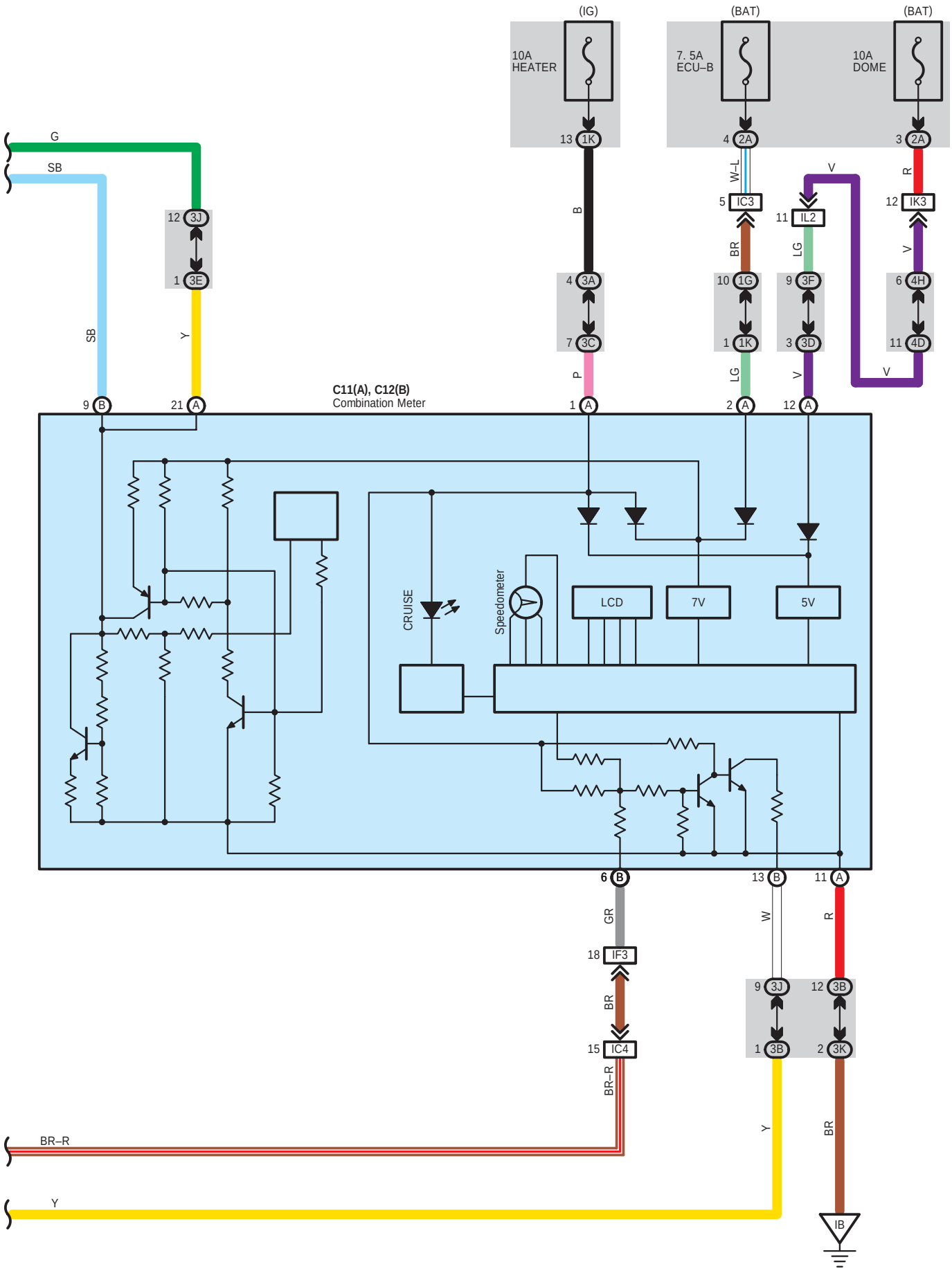
(IG)
(BAT)
(BAT)
10A
HEATER
7. 5A
ECU–B
10A
DOME
13 1K
4 2A
3 2A
W–L
R
V
5 IC3
11 IL2
12 IK3
B
BR
LG
V
4 3A
10 1G
9 3F
6 4H
7 3C
1 1K
3 3D
11 4D
P
LG
V
V
G
SB
12 3J
1 3E
SB
Y
9 B
21 A
C11(A), C12(B)
Combination Meter
1 A
2 A
12 A
CRUISE
Speedometer
LCD
7V
5V
6 B
13 B
11 A
GR
W
R
18 IF3
9 3J
12 3B
BR
15 IC4
1 3B
2 3K
BR–R
Y
BR
BR–R
Y
IB

System Outline

The cruise control system is a constant vehicle speed controller in which control of the switch on the instrument panel makes it possible to automatically adjust the opening of the engine throttle valve without depressing of the accel pedal.

1. Set Operation

When the ON–OFF SW is turned on, the system starts preparations necessary for the cruise control and turns on the indicator light in the combination meter.

2. Set Speed Control

When the – SET SW is operated with the ON–OFF SW turned on during travelling, the constant vehicle speed is controlled.

3. Coast Control

When the – SET SW is kept turned on during cruise control travelling, the engine control module controls the throttle valve to decelerate the vehicle. Every time the – SET SW is turned on instantaneously, the vehicle speed is decelerated approximately 1.5 km/h.

4. Accel Control

When the + RES SW is kept turned on during cruise control travelling, the engine control module controls the throttle valve to accelerate the vehicle. Every time the + RES SW is turned on instantaneously, the vehicle speed is accelerated approximately 1.5 km/h.

5. Resume Control

When the vehicle speed is within the low speed limit (Approximately 40 km/h, 25 mph) if the cruise control is cancelled, use of the + RES SW accelerates the vehicle to the speed level used before canceling the cruise control.

6. Manual Cancel Mechanism

If any of the following signals is input during cruise control travelling, the cruise control is cancelled.

* The stop light SW is turned on.
* The CANCEL SW is turned on.
* The ON–OFF SW is turned off.
* Gear is shifted from D position to other positions than D.

7. Auto Cancel Function

If any of the following conditions is encountered, the cruise control is automatically cancelled.

* The stop light SW wiring is faulty or short–circuited.
* The vehicle speed signal is faulty.
* The electronically controlled throttle malfunctions.

8. Overdrive Control Function

The overdrive control may be cancelled if the vehicle travels on the slope during cruise control travelling. After the overdrive control has been cancelled, when climbing hill is judged to finish from throttle opening information, the vehicle returns to the overdrive control mode again after the overdrive return timer is completed.

○ : Parts Location

Code		See Page	Code		See Page	Code		See Page
A10	A	42	E2	A	38 (3MZ–FE)	P1		39 (3MZ–FE)
A11	B	42	E5	A	42	P5		44
A17	B	42	E6	B	42	S15		43
A27		42	E7	E	42	S27		39 (3MZ–FE)
B9	A	42	E8	D	42	S28	A	43
B10	B	42	E9	C	42	S29	B	43
C11	A	42	G5		43	S30	A	43
C12	B	42	J2		39 (3MZ–FE)	S31	B	43
C16		42	J6		43	T13		39 (3MZ–FE)
D3		42	J7		43			
E1		38 (3MZ–FE)	J16		43			

▭ : Relay Blocks

Code	See Page	Relay Blocks (Relay Block Location)
2	22	Engine Room R/B (Engine Compartment Left)

: **Junction Block and Wire Harness Connector**

Code	See Page	Junction Block and Wire Harness (Connector Location)
1E	29	Cowl Wire and Instrument Panel J/B (Lower Finish Panel)
1G		
1K	28	Instrument Panel Wire and Instrument Panel J/B (Lower Finish Panel)
2A	27	Engine Room Main Wire and Engine Room J/B (Engine Compartment Left)
2B		
2F		
3A	30	Instrument Panel Wire and Center J/B (Behind the Instrument Panel Center)
3B		
3C		
3D		
3E		
3F		
3J	31	
3K		
4A	33	Cowl Wire and Passenger Side J/B (Right Side of Grove Box)
4D		
4E		
4F		
4H		
4L	32	
4M		

: **Connector Joining Wire Harness and Wire Harness**

Code	See Page	Joining Wire Harness and Wire Harness (Connector Location)
IB2	50	Front Door LH Wire and Cowl Wire (Left Kick Panel)
IC1	50	Engine Room Main Wire and Cowl Wire (Left Cowl Side Panel)
IC3		
IC4		
IF3	50	Instrument Panel Wire and Cowl Wire (Right Side of Instrument Panel J/B)
IK2	51	Engine Room Main Wire and Cowl Wire (Right Cowl Side Panel)
IK3		
IL2	51	Instrument Panel Wire and Cowl Wire (Upper Side of Passenger Side J/B)
IM1	51	Engine Wire and Cowl Wire (Right Kick Panel)

: **Ground Points**

Code	See Page	Ground Points Location
EC	48 (3MZ–FE)	Left Side of Cylinder Head
ED	48 (3MZ–FE)	Rear Side of Cylinder Head
EH	48 (3MZ–FE)	Under the Left Headlight
IB	50	Right Instrument Panel Brace

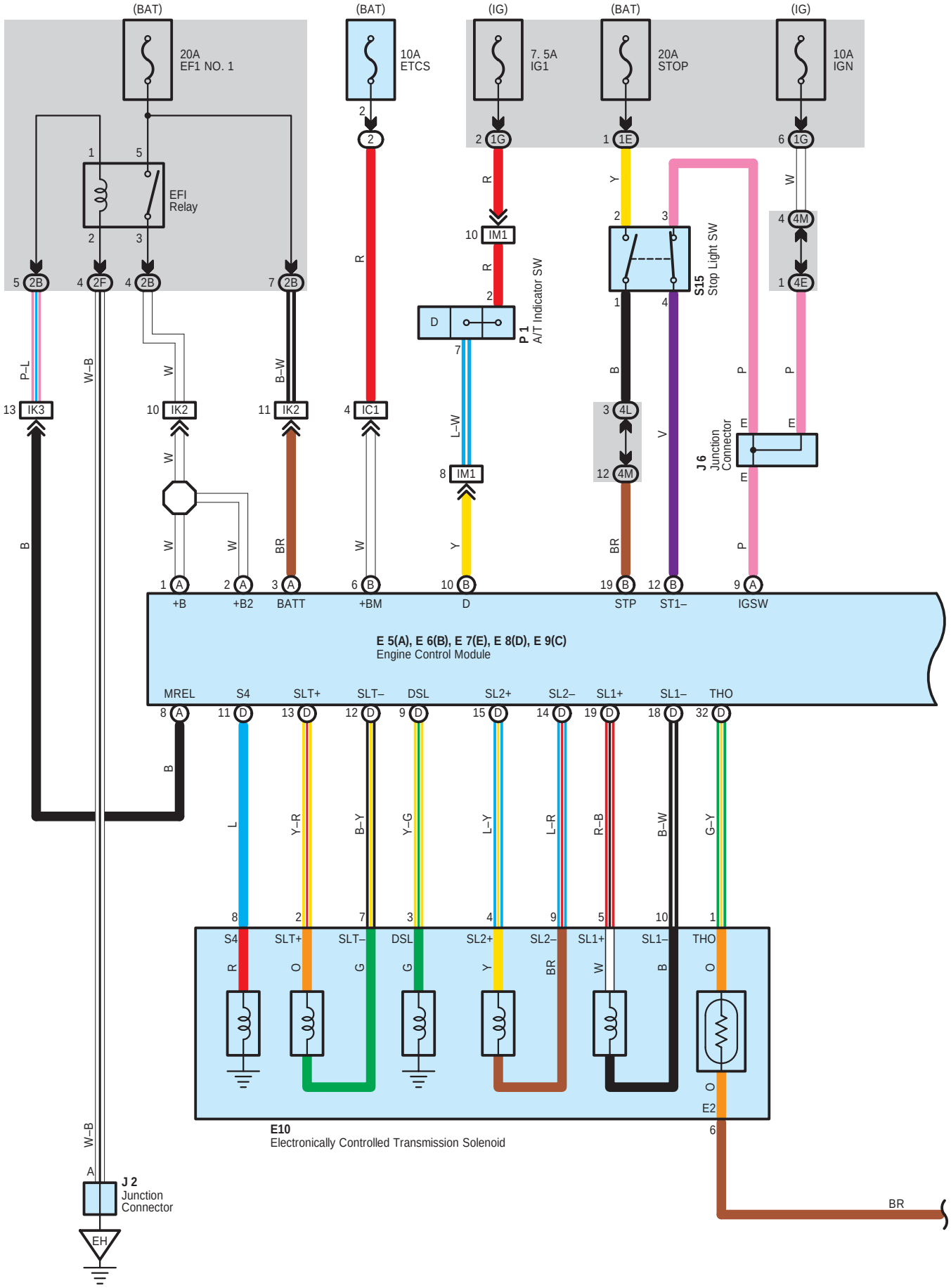
(BAT)
20A
EF1 NO. 1
EFI
Relay
(BAT)
10A
ETCS
(IG)
7. 5A
IG1
(BAT)
20A
STOP
(IG)
10A
IGN
P 1
A/T Indicator SW
S15
Stop Light SW
J 6
Junction
Connector
+B
+B2
BATT
+BM
D
STP
ST1–
IGSW
E 5(A), E 6(B), E 7(E), E 8(D), E 9(C)
Engine Control Module
MREL
S4
SLT+
SLT–
DSL
SL2+
SL2–
SL1+
SL1–
THO
E10
Electronically Controlled Transmission Solenoid
J 2
Junction
Connector
EH
E2

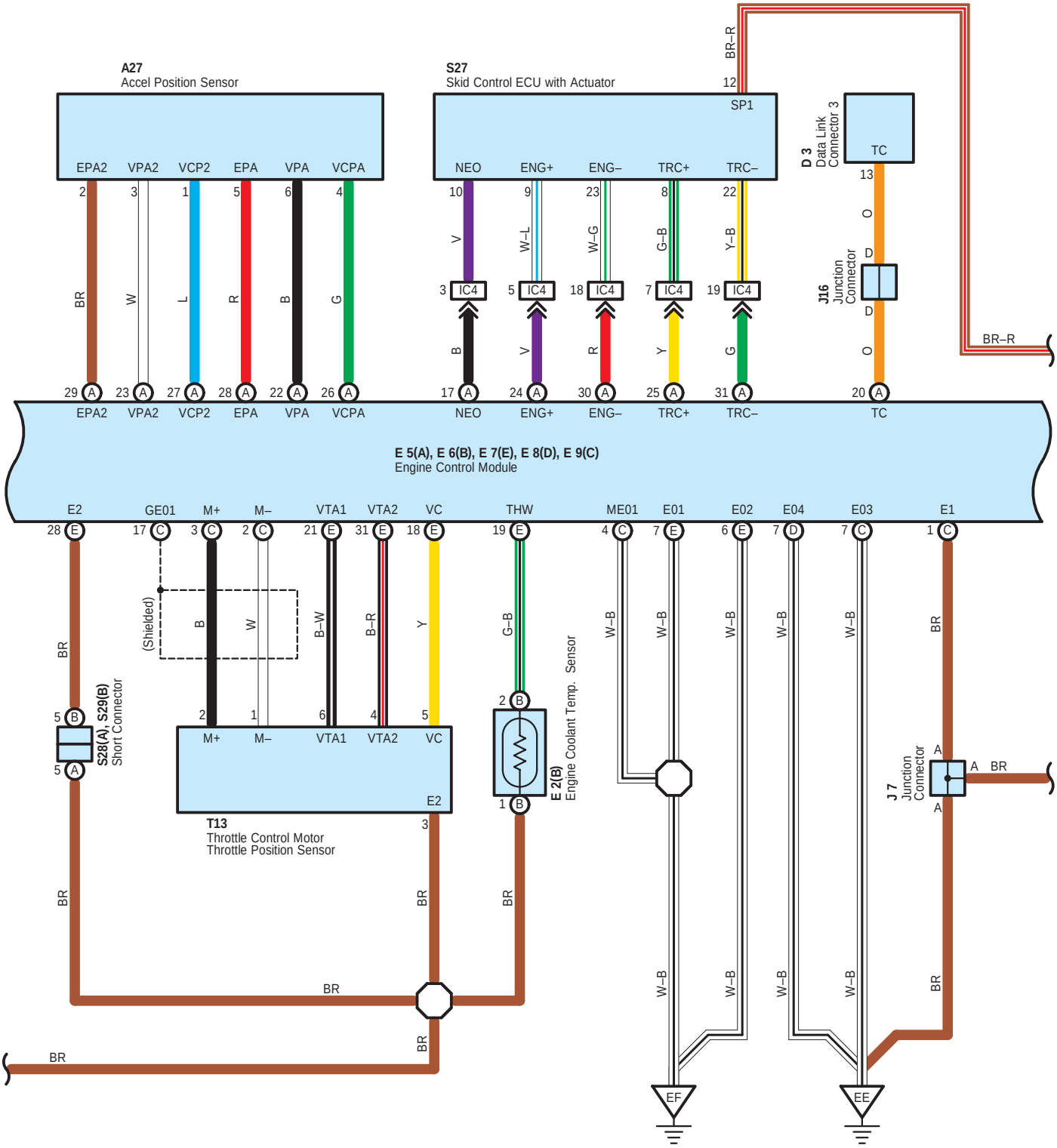
A27
Accel Position Sensor
EPA2
VPA2
VCP2
EPA
VPA
VCPA
S27
Skid Control ECU with Actuator
SP1
NEO
ENG+
ENG–
TRC+
TRC–
BR–R
D 3
Data Link Connector 3
TC
J16
Junction Connector
E 5(A), E 6(B), E 7(E), E 8(D), E 9(C)
Engine Control Module
E2
GE01
M+
M–
VTA1
VTA2
VC
THW
ME01
E01
E02
E04
E03
E1
(Shielded)
S28(A), S29(B)
Short Connector
T13
Throttle Control Motor
Throttle Position Sensor
E 2(B)
Engine Coolant Temp. Sensor
J 7
Junction Connector
EF
EE
BR
W
L
R
B
G
V
W–L
W–G
G–B
Y–B
B–W
B–R
Y
W–B
O
D

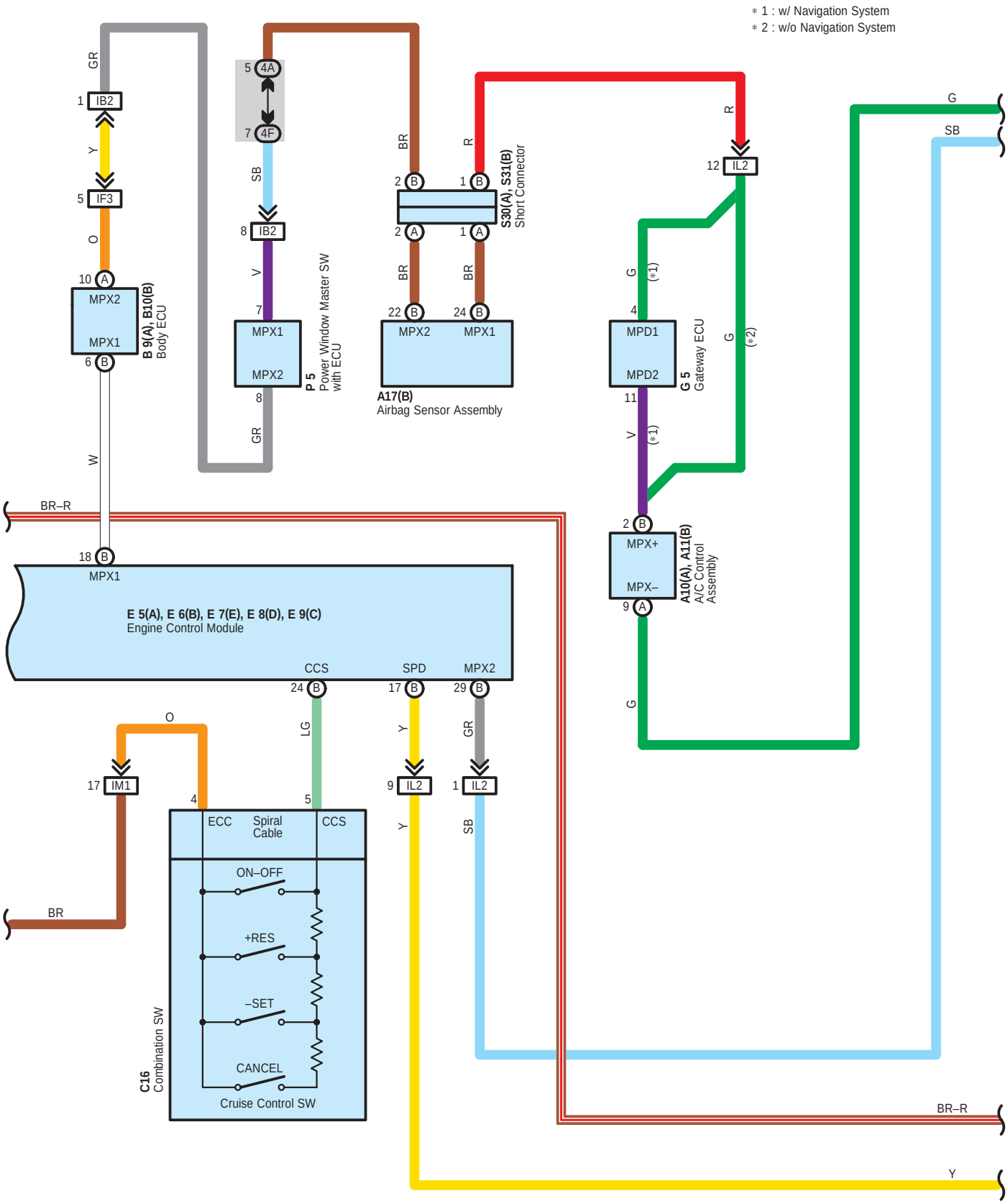
* 1 : w/ Navigation System
* 2 : w/o Navigation System
GR
1 IB2
Y
5 IF3
O
10 A MPX2
MPX1 6 B
B 9(A), B10(B)
Body ECU
W
18 B MPX1
BR–R
E 5(A), E 6(B), E 7(E), E 8(D), E 9(C)
Engine Control Module
CCS 24 B
SPD 17 B
MPX2 29 B
O
17 IM1
BR
4
LG
5
Y
9 IL2
GR
1 IL2
SB
ECC
Spiral Cable
CCS
ON–OFF
+RES
–SET
CANCEL
Cruise Control SW
C16
Combination SW
5 4A
7 4F
SB
8 IB2
V
7 MPX1
MPX2 8
GR
P 5
Power Window Master SW with ECU
BR
2 B
2 A
BR
22 B MPX2
BR
1 B
1 A
24 B MPX1
A17(B)
Airbag Sensor Assembly
R
S30(A), S31(B)
Short Connector
R
12 IL2
G
4 MPD1
MPD2 11
G 5
Gateway ECU
(*1)
G
(*2)
V
(*1)
2 B MPX+
MPX– 9 A
A10(A), A11(B)
A/C Control Assembly
G
G
SB
BR–R
Y

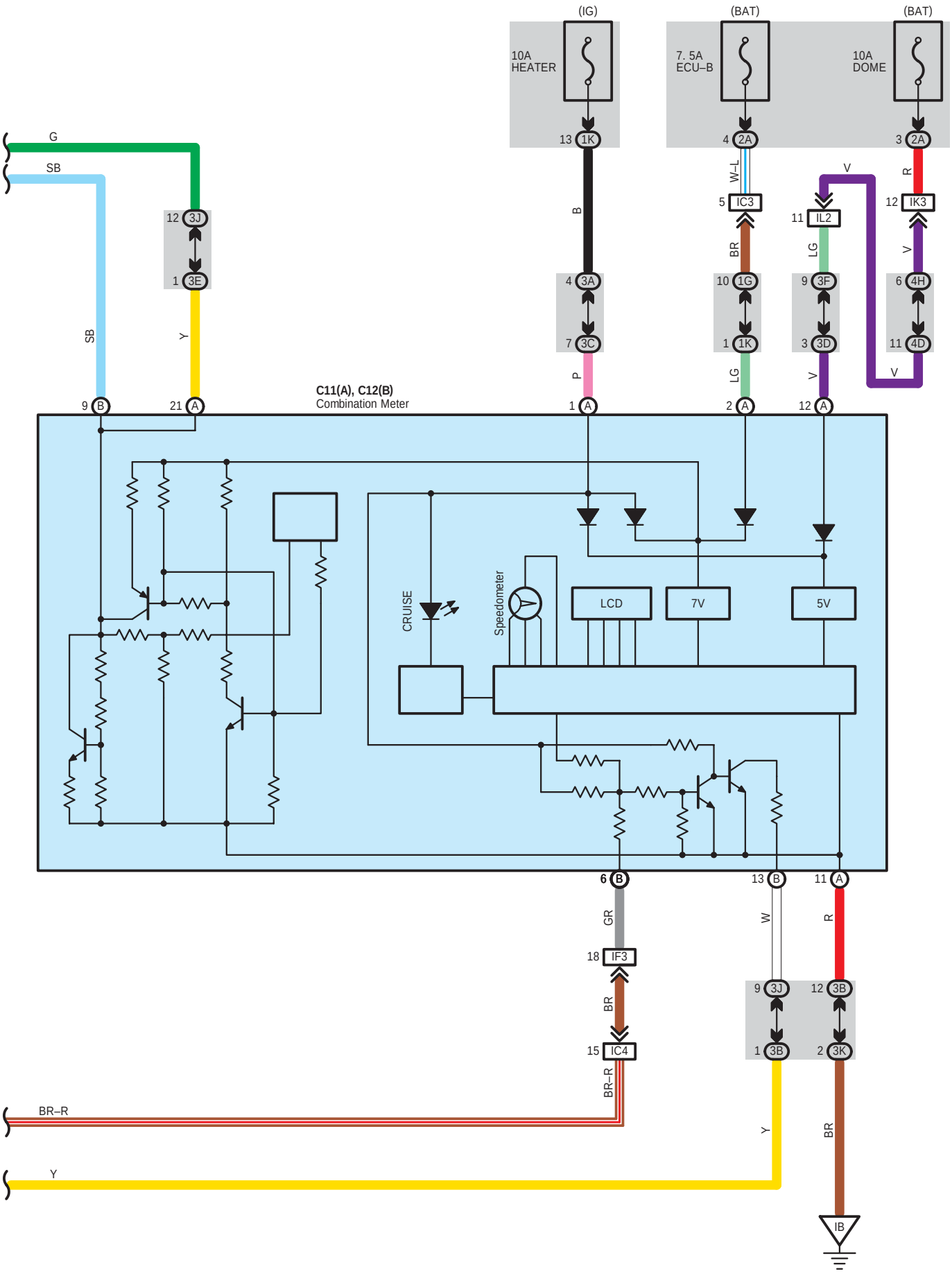
(IG)
(BAT)
(BAT)
10A
HEATER
7. 5A
ECU–B
10A
DOME
13 1K
4 2A
3 2A
W–L
R
V
5 IC3
12 IK3
11 IL2
B
BR
LG
V
4 3A
10 1G
9 3F
6 4H
7 3C
1 1K
3 3D
11 4D
P
LG
V
V
G
SB
12 3J
1 3E
SB
Y
9 B
21 A
C11(A), C12(B)
Combination Meter
1 A
2 A
12 A
CRUISE
Speedometer
LCD
7V
5V
6 B
13 B
11 A
GR
W
R
18 IF3
9 3J
12 3B
BR
15 IC4
1 3B
2 3K
BR–R
Y
BR
BR–R
Y
IB

Cruise Control for 2AZ–FE

System Outline

The cruise control system is a constant vehicle speed controller in which control of the switch on the instrument panel makes it possible to automatically adjust the opening of the engine throttle valve without depressing of the accel pedal.

1. Set Operation

When the ON–OFF SW is turned on, the system starts preparations necessary for the cruise control and turns on the indicator light in the combination meter.

2. Set Speed Control

When the – SET SW is operated with the ON–OFF SW turned on during travelling, the constant vehicle speed is controlled.

3. Coast Control

When the – SET SW is kept turned on during cruise control travelling, the engine control module controls the throttle valve to decelerate the vehicle. Every time the – SET SW is turned on instantaneously, the vehicle speed is decelerated approximately 1.5 km/h.

4. Accel Control

When the + RES SW is kept turned on during cruise control travelling, the engine control module controls the throttle valve to accelerate the vehicle. Every time the + RES SW is turned on instantaneously, the vehicle speed is accelerated approximately 1.5 km/h.

5. Resume Control

When the vehicle speed is within the low speed limit (Approximately 40 km/h, 25 mph) if the cruise control is cancelled, use of the + RES SW accelerates the vehicle to the speed level used before canceling the cruise control.

6. Manual Cancel Mechanism

If any of the following signals is input during cruise control travelling, the cruise control is cancelled.

* The stop light SW is turned on.
* The CANCEL SW is turned on.
* The ON–OFF SW is turned off.
* Gear is shifted from D position to other positions than D.

7. Auto Cancel Function

If any of the following conditions is encountered, the cruise control is automatically cancelled.

* The stop light SW wiring is faulty or short–circuited.
* The vehicle speed signal is faulty.
* The electronically controlled throttle malfunctions.

8. Overdrive Control Function

The overdrive control may be cancelled if the vehicle travels on the slope during cruise control travelling. After the overdrive control has been cancelled, when climbing hill is judged to finish from throttle opening information, the vehicle returns to the overdrive control mode again after the overdrive return timer is completed.

○ : Parts Location

Code		See Page	Code		See Page	Code		See Page
A10	A	42	E5	A	42	P1		41 (2AZ–FE)
A11	B	42	E6	B	42	P5		44
A17	B	42	E7	E	42	S15		43
A27		42	E8	D	42	S27		41 (2AZ–FE)
B9	A	42	E9	C	42	S28	A	43
B10	B	42	E10		40 (2AZ–FE)	S29	B	43
C11	A	42	G5		43	S30	A	43
C12	B	42	J2		41 (2AZ–FE)	S31	B	43
C16		42	J6		43	T13		41 (2AZ–FE)
D3		42	J7		43			
E2	B	40 (2AZ–FE)	J16		43			

▭ : Relay Blocks

Code	See Page	Relay Blocks (Relay Block Location)
2	22	Engine Room R/B (Engine Compartment Left)

: **Junction Block and Wire Harness Connector**

Code	See Page	Junction Block and Wire Harness (Connector Location)
1E	29	Cowl Wire and Instrument Panel J/B (Lower Finish Panel)
1G		
1K	28	Instrument Panel Wire and Instrument Panel J/B (Lower Finish Panel)
2A	27	Engine Room Main Wire and Engine Room J/B (Engine Compartment Left)
2B		
2F		
3A	30	Instrument Panel Wire and Center J/B (Behind the Instrument Panel Center)
3B		
3C		
3D		
3E		
3F		
3J	31	
3K		
4A	33	Cowl Wire and Passenger Side J/B (Right Side of Grove Box)
4D		
4E		
4F		
4H		
4L	32	
4M		

: **Connector Joining Wire Harness and Wire Harness**

Code	See Page	Joining Wire Harness and Wire Harness (Connector Location)
IB2	50	Front Door LH Wire and Cowl Wire (Left Kick Panel)
IC1	50	Engine Room Main Wire and Cowl Wire (Left Cowl Side Panel)
IC3		
IC4		
IF3	50	Instrument Panel Wire and Cowl Wire (Right Side of Instrument Panel J/B)
IK2	51	Engine Room Main Wire and Cowl Wire (Right Cowl Side Panel)
IK3		
IL2	51	Instrument Panel Wire and Cowl Wire (Upper Side of Passenger Side J/B)
IM1	51	Engine Wire and Cowl Wire (Right Kick Panel)

: **Ground Points**

Code	See Page	Ground Points Location
EE	49 (2AZ–FE)	Intake Side of Cylinder Block
EF	49 (2AZ–FE)	Left Side of Cylinder Block
EH	49 (2AZ–FE)	Under the Left Headlight
IB	50	Right Instrument Panel Brace

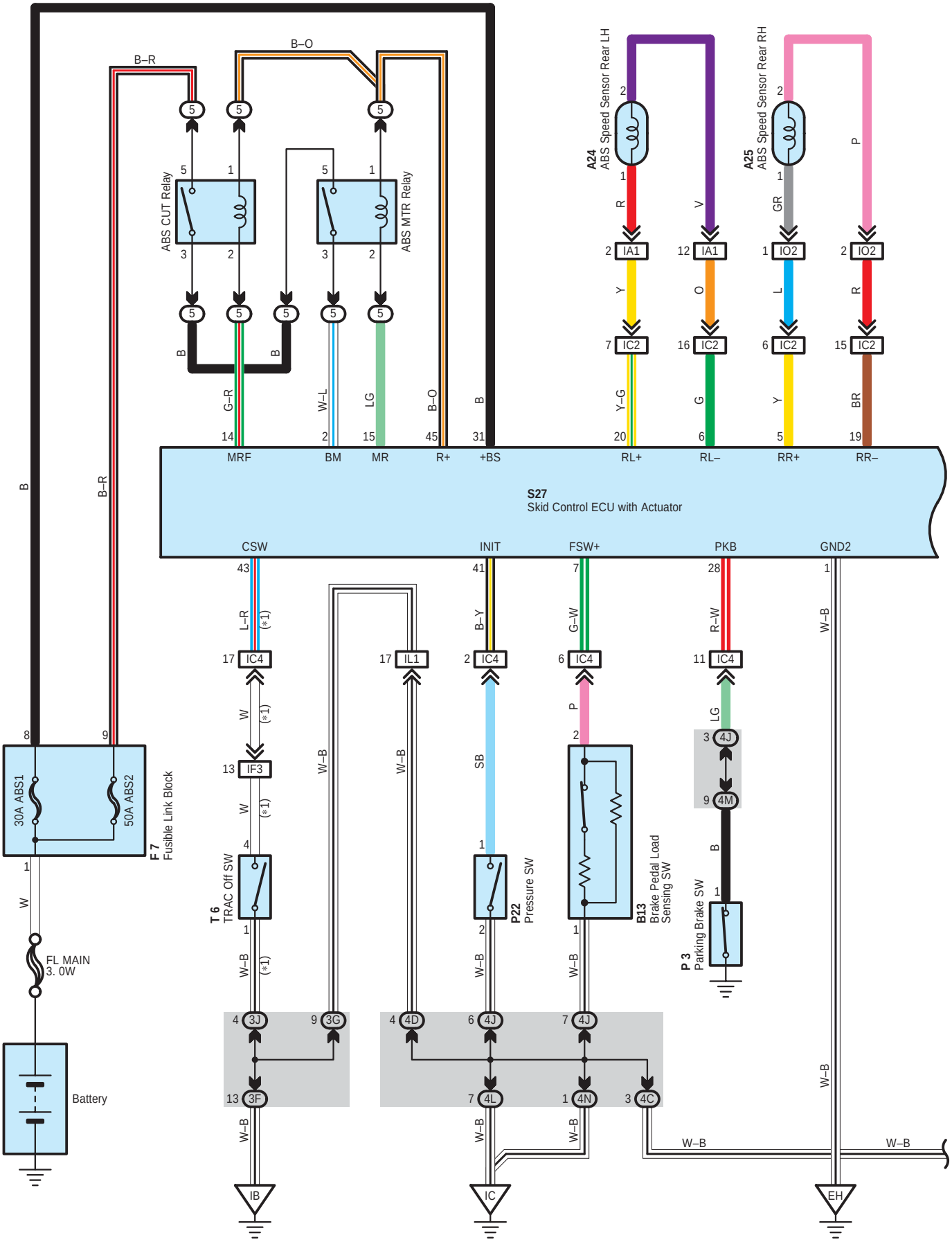
B–R
B–O
ABS CUT Relay
ABS MTR Relay
A24
ABS Speed Sensor Rear LH
A25
ABS Speed Sensor Rear RH
MRF
BM
MR
R+
+BS
RL+
RL–
RR+
RR–
S27
Skid Control ECU with Actuator
CSW
INIT
FSW+
PKB
GND2
30A ABS1
50A ABS2
F 7
Fusible Link Block
FL MAIN
3. 0W
Battery
T 6
TRAC Off SW
P22
Pressure SW
B13
Brake Pedal Load
Sensing SW
P 3
Parking Brake SW
IB
IC
EH

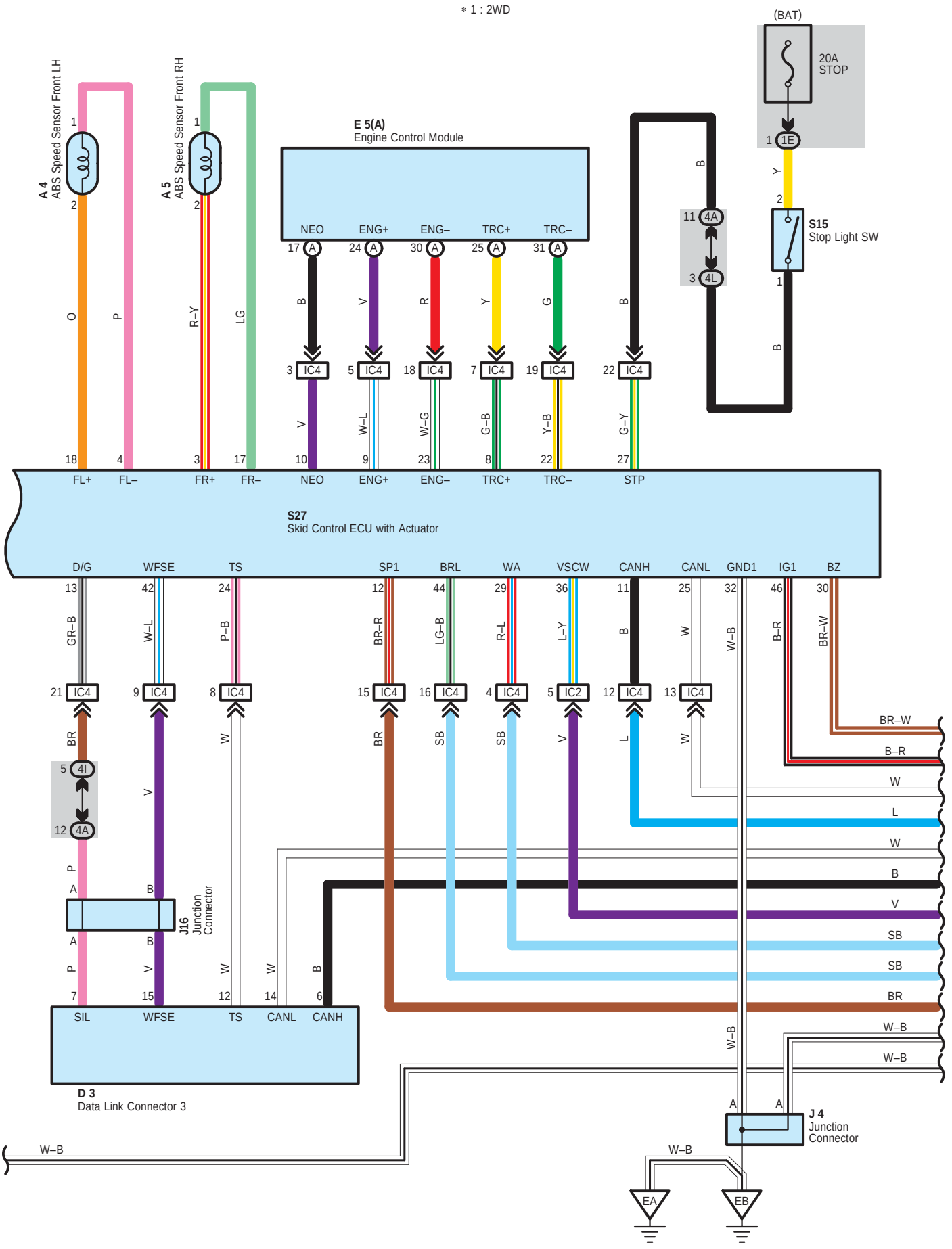
* 1 : 2WD
(BAT)
20A
STOP
1E
A 4
ABS Speed Sensor Front LH
A 5
ABS Speed Sensor Front RH
E 5(A)
Engine Control Module
NEO
ENG+
ENG–
TRC+
TRC–
4A
4L
S15
Stop Light SW
FL+
FL–
FR+
FR–
NEO
ENG+
ENG–
TRC+
TRC–
STP
S27
Skid Control ECU with Actuator
D/G
WFSE
TS
SP1
BRL
WA
VSCW
CANH
CANL
GND1
IG1
BZ
4I
4A
J16
Junction
Connector
SIL
WFSE
TS
CANL
CANH
D 3
Data Link Connector 3
J 4
Junction
Connector
W–B
EA
EB

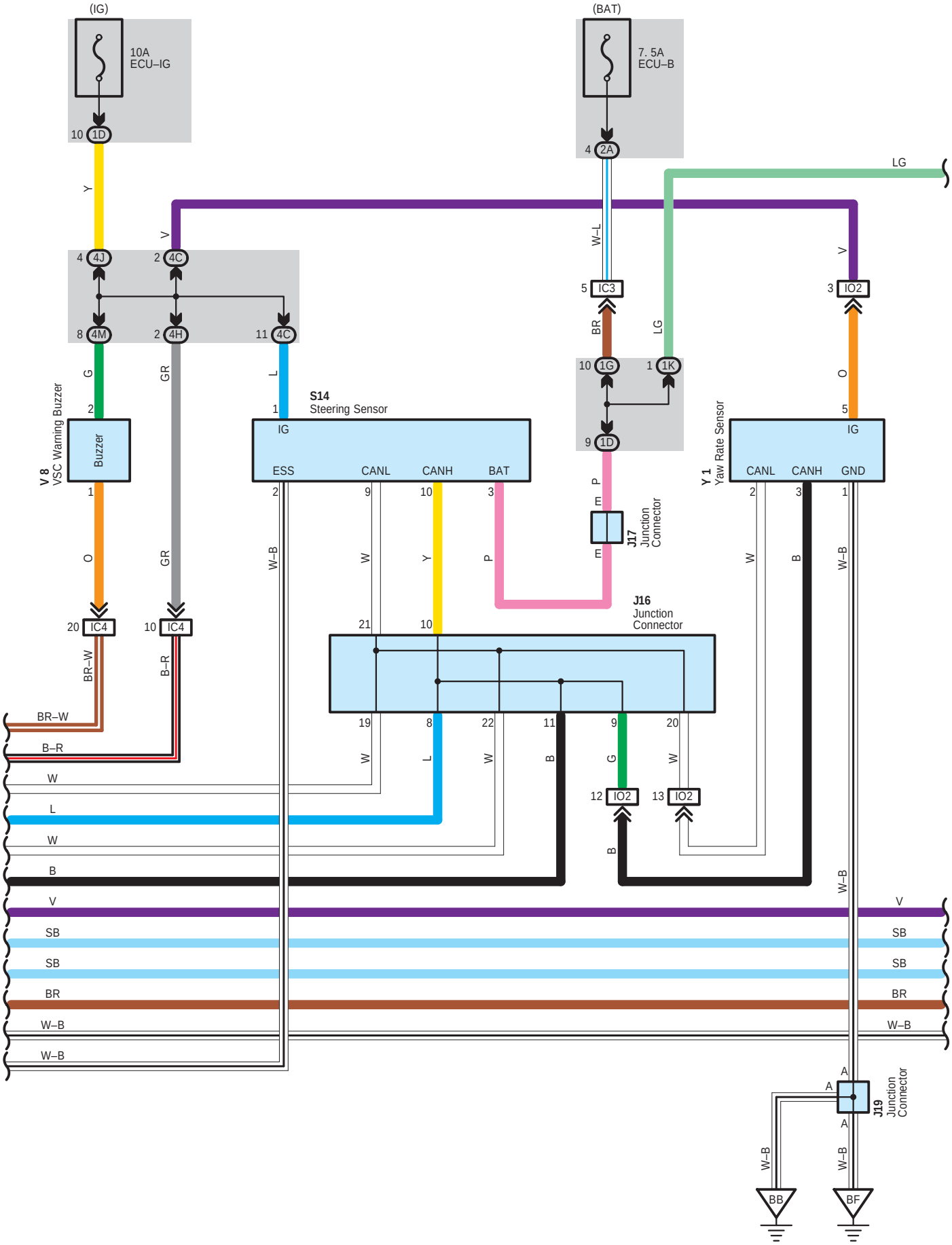
(IG)
10A
ECU–IG
10 1D
(BAT)
7. 5A
ECU–B
4 2A
LG
Y
V
W–L
V
4 4J
2 4C
5 IC3
3 IO2
BR
LG
8 4M
2 4H
11 4C
10 1G
1 1K
G
GR
L
O
2
1
5
9 1D
V 8
VSC Warning Buzzer
Buzzer
S14
Steering Sensor
IG
ESS
CANL
CANH
BAT
Y 1
Yaw Rate Sensor
CANL
CANH
GND
P
E
J17
Junction
Connector
J16
Junction
Connector
O
GR
W–B
W
Y
P
B
20 IC4
10 IC4
21
10
BR–W
B–R
19
8
22
11
9
20
12 IO2
13 IO2
W
L
W
B
G
W
B
V
SB
SB
BR
W–B
W–B
A
A
J19
Junction
Connector
BB
BF

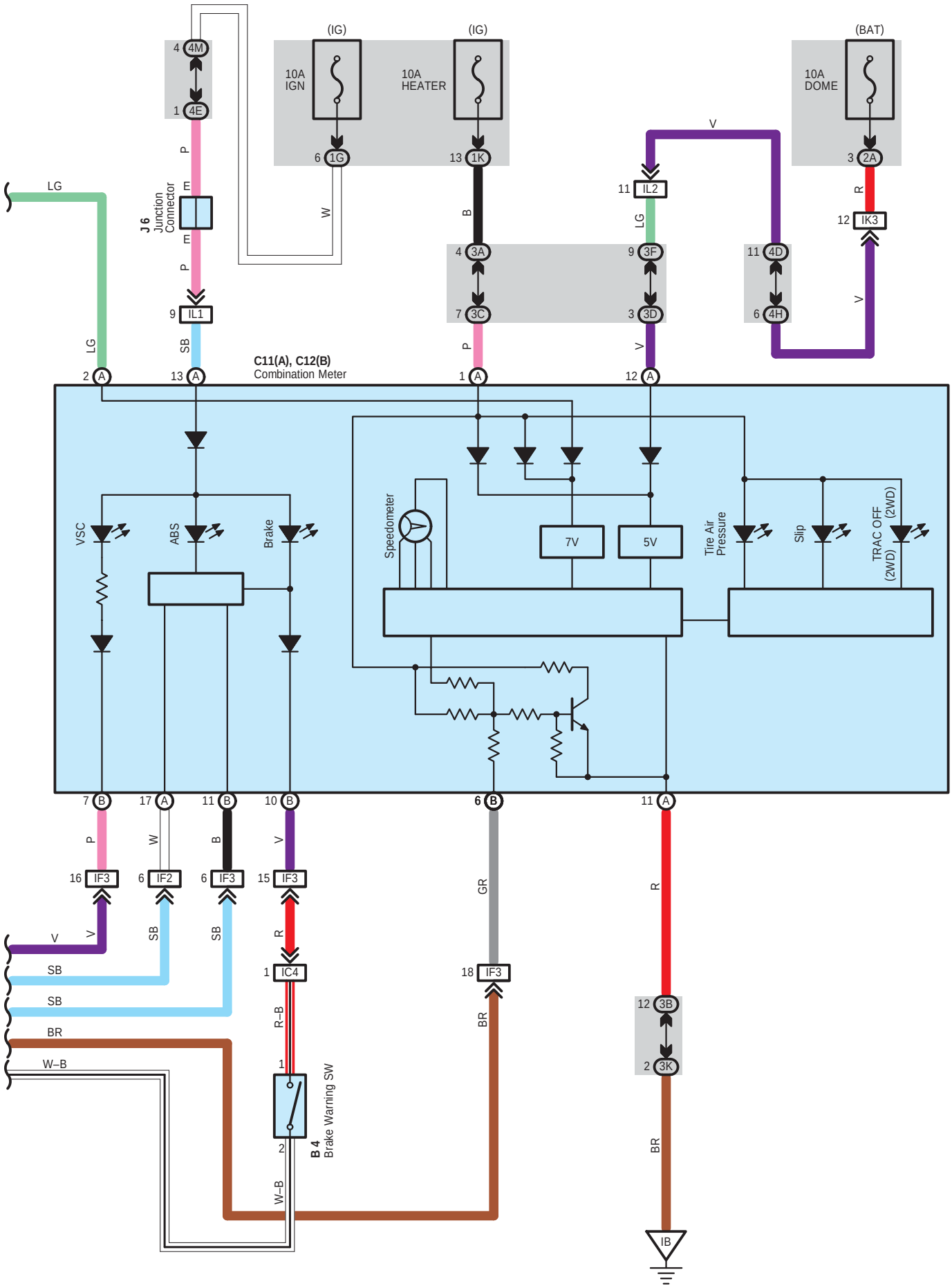
(IG)
(IG)
(BAT)
10A IGN
10A HEATER
10A DOME
4 4M
1 4E
6 1G
13 1K
3 2A
J 6 Junction Connector
11 IL2
12 IK3
4 3A
9 3F
11 4D
7 3C
3 3D
6 4H
9 IL1
C11(A), C12(B) Combination Meter
2 A
13 A
1 A
12 A
VSC
ABS
Brake
Speedometer
7V
5V
Tire Air Pressure
Slip
TRAC OFF (2WD)
7 B
17 A
11 B
10 B
6 B
11 A
16 IF3
6 IF2
6 IF3
15 IF3
18 IF3
1 IC4
12 3B
2 3K
B 4 Brake Warning SW
IB
LG
P
E
W
B
V
SB
R
GR
BR
W–B
R–B

System Outline

1. ABS Operation

If the brake pedal is depressed suddenly, the ABS controls the hydraulic pressure of the wheel cylinders for all the four wheels to automatically avoid wheel locking and ensure the directional and steering stability of the vehicle. If the brake pedal is depressed suddenly, the skid control ECU with actuator controls the solenoids in the actuators using the signals from the sensors to move the brake fluid to the reservoir in order to release the braking pressure applied to the wheel cylinder. If the skid control ECU with actuator detects that the fluid pressure in the wheel cylinder is insufficient, the ECU controls the solenoids in the actuators to increase the braking pressure.

2. Traction Control Operation

The traction control system controls the engine torque, the hydraulic pressure of the driving wheel cylinders, slipping of the wheels which may occur at start or acceleration of the vehicle, to ensure an optimal driving power and vehicle stability corresponding to the road conditions.

3. VSC Operation

Unexpected road conditions, vehicle speed, emergency situation, and any other external factors may cause large under– or over–steering of the vehicle. If this occurs, the VSC system automatically controls the engine power and wheel brakes to reduce the under– or over–steering.

To reduce large over–steering :

If the VSC system determines that the over–steering is large, it activates the brakes for the outer front turning wheels depending on the degree of the over–steering to produce the moment toward the outside of the vehicle and reduce the over–steering.

To reduce large under–steering :

If the VSC system determines that the under–steering is large, it controls the engine power and activates the rear wheel brakes to reduce the under–steering.

VSC indicator light

If an mulfunction occurs in the VSC system, the VSC indicator lights up to warn the driver.

4. Mutual System Control

To efficiently operate the VSC system at its optimal level, the VSC system and other control systems are mutually controlled while the VSC system is being operated.

Engine control

The engine power does not interfere with the VSC brake control by fuel cut controlling and reducing the engine output.

Engine control and electronically controlled transmission control

The strong braking force does not interfere with the braking force control of the VSC system by turning off the accel and reducing changes in the driving torque at shift–down.

VSC system operation indication

The slip indicator light flashes and the buzzer alarm intermittently to warn the driver that the current road is slippery, while the VSC system is being operated.

5. Fail Safe Function

If an mulfunction occurs in the skid control ECU with actuator, sensor signals, and/or actuators, the skid control ECU with actuator inhibits the brake actuator control and inputs the mulfunction signal to the engine control module. According to the mulfunction signal, the brake actuator turns off the solenoid and the engine control module rejects any electronically controlled request from the VSC system. As a result, the vehicle functions without the ABS, BA, TRAC, and VSC systems.

○ : Parts Location

Code	See Page	Code	See Page	Code	See Page
A4	38 (3MZ–FE)	C12 B	42	J19	44
	40 (2AZ–FE)	D3	42	P3	43
A5	38 (3MZ–FE)	E5 A	42	P22	43
	40 (2AZ–FE)	F7	38 (3MZ–FE)	S14	43
A24	44		40 (2AZ–FE)	S15	43
A25	44	J4	39 (3MZ–FE)	S27	39 (3MZ–FE)
B4	38 (3MZ–FE)		41 (2AZ–FE)		41 (2AZ–FE)
	40 (2AZ–FE)	J6	43	T6	43
B13	42	J16	43	V8	43
C11 A	42	J17	43	Y1	45

▭ : Relay Blocks

Code	See Page	Relay Blocks (Relay Block Location)
5	23	ABS R/B (Engine Compartment Rear Left)

: Junction Block and Wire Harness Connector

Code	See Page	Junction Block and Wire Harness (Connector Location)
1D	29	Cowl Wire and Instrument Panel J/B (Lower Finish Panel)
1E		
1G		
1K	28	Instrument Panel Wire and Instrument Panel J/B (Lower Finish Panel)
2A	27	Engine Room Main Wire and Engine Room J/B (Engine Compartment Left)
3A	30	Instrument Panel Wire and Center J/B (Behind the Instrument Panel Center)
3B		
3C		
3D		
3F		
3G	31	
3J		
3K		
4A	33	Cowl Wire and Passenger Side J/B (Right Side of Grove Box)
4C		
4D		
4E		
4H		
4I	32	
4J		
4L		
4M		
4N		

: Connector Joining Wire Harness and Wire Harness

Code	See Page	Joining Wire Harness and Wire Harness (Connector Location)
IA1	50	Cowl Wire and Floor No.2 Wire (Left Kick Panel)
IC2	50	Engine Room Main Wire and Cowl Wire (Left Cowl Side Panel)
IC3		
IC4		
IF2	50	Instrument Panel Wire and Cowl Wire (Right Side of Instrument Panel J/B)
IF3		
IK3	51	Engine Room Main Wire and Cowl Wire (Right Cowl Side Panel)
IL1	51	Instrument Panel Wire and Cowl Wire (Upper Side of Passenger Side J/B)
IL2		
IO2	51	Cowl Wire and Floor Wire (Right Kick Panel)

: Ground Points

Code	See Page	Ground Points Location
EA	48 (3MZ–FE)	Right Front Fender Apron
	49 (2AZ–FE)	
EB	48 (3MZ–FE)	
	49 (2AZ–FE)	
EH	48 (3MZ–FE)	Under the Left Headlight
	49 (2AZ–FE)	
IB	50	Right Instrument Panel Brace
IC	50	Right Cowl Side Panel
BB	52	Right Center Pillar
BF	52	Near the Rear Side Marker Light RH

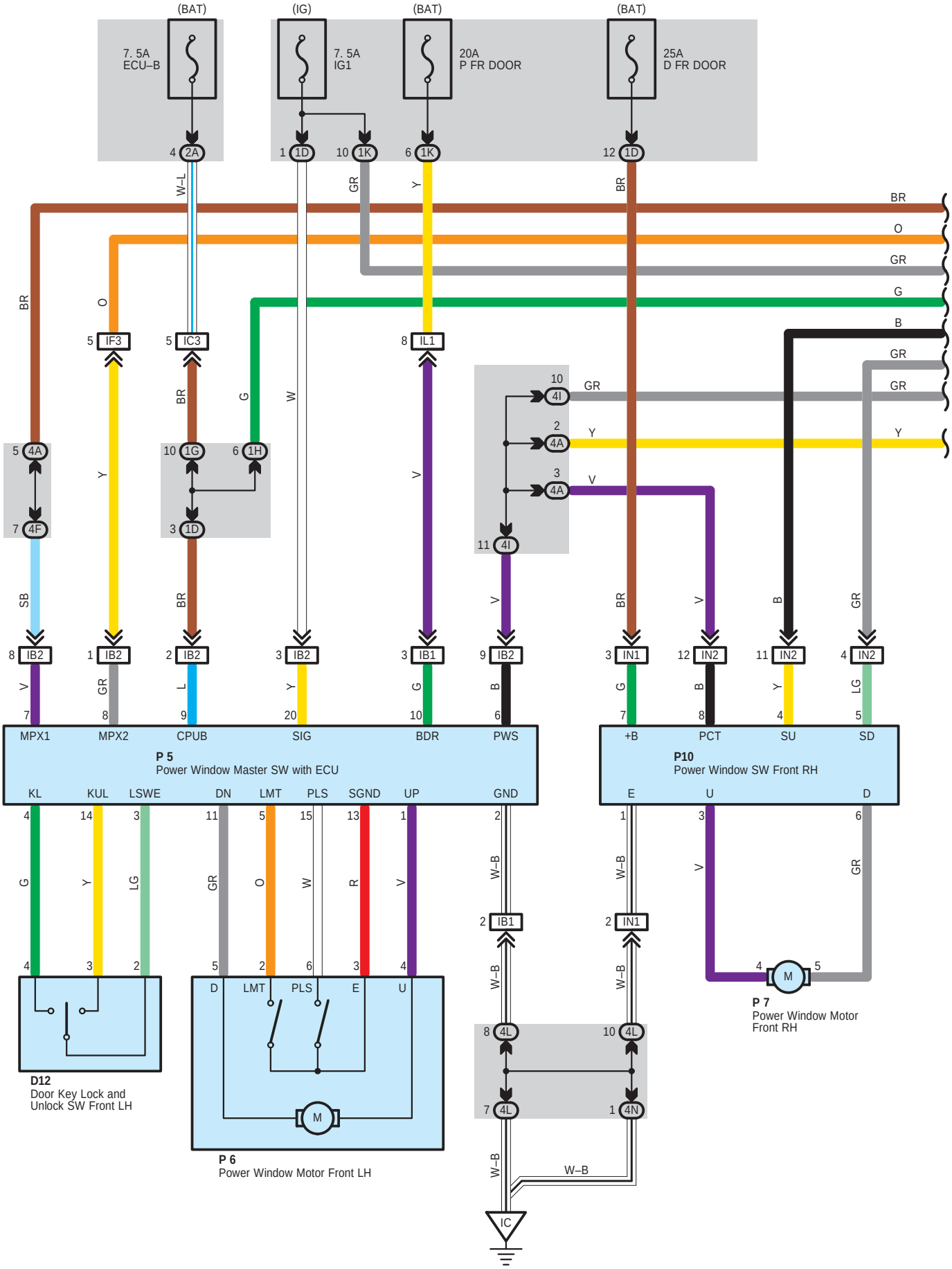
(BAT)
7. 5A
ECU–B
(IG)
7. 5A
IG1
(BAT)
20A
P FR DOOR
(BAT)
25A
D FR DOOR
4 2A
1 1D
10 1K
6 1K
12 1D
W–L
GR
Y
BR
BR
O
GR
G
B
GR
GR
Y
5 IF3
5 IC3
8 IL1
10 4I
2 4A
3 4A
11 4I
5 4A
7 4F
10 1G
6 1H
3 1D
SB
BR
G
W
V
V
BR
V
B
GR
8 IB2
1 IB2
2 IB2
3 IB2
3 IB1
9 IB2
3 IN1
12 IN2
11 IN2
4 IN2
V
GR
L
Y
G
B
G
B
Y
LG
7
8
9
20
10
6
7
8
1
5
MPX1
MPX2
CPUB
SIG
BDR
PWS
+B
PCT
SU
SD
P 5
Power Window Master SW with ECU
P10
Power Window SW Front RH
KL
KUL
LSWE
DN
LMT
PLS
SGND
UP
GND
E
U
D
4
14
3
11
5
15
13
1
2
1
3
6
G
Y
LG
GR
O
W
R
V
W–B
V
GR
4
3
2
5
2
6
3
4
2
2
2
D
LMT
PLS
E
U
IB1
IN1
M
4
5
P 7
Power Window Motor
Front RH
W–B
W–B
8 4L
10 4L
7 4L
1 4N
W–B
W–B
D12
Door Key Lock and
Unlock SW Front LH
P 6
Power Window Motor Front LH
IC

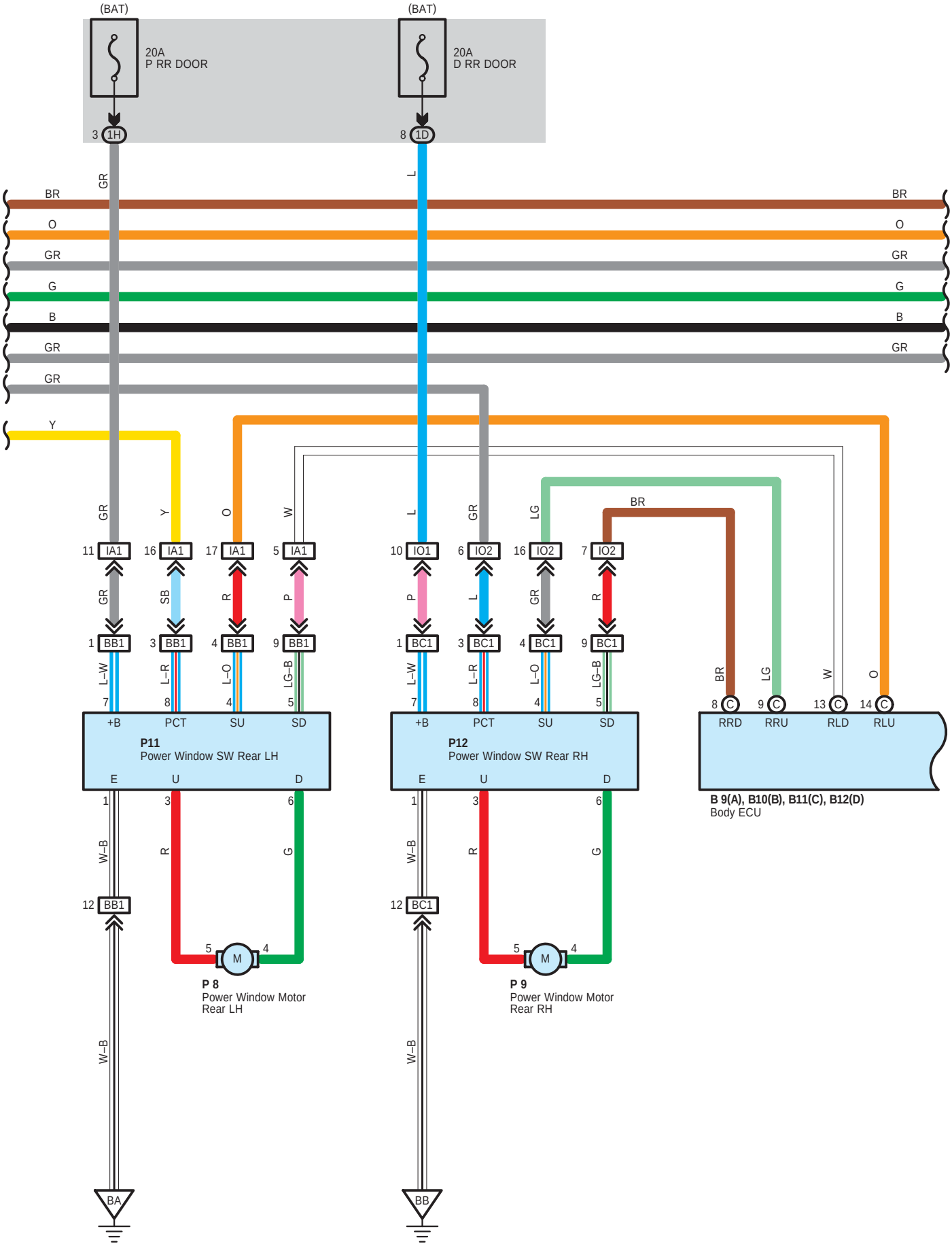
(BAT)
20A
P RR DOOR
3 1H
(BAT)
20A
D RR DOOR
8 1D
BR
O
GR
G
B
GR
GR
Y
L
BR
O
GR
G
B
GR
GR
GR
Y
O
W
L
GR
LG
BR
11 IA1
16 IA1
17 IA1
5 IA1
10 IO1
6 IO2
16 IO2
7 IO2
GR
SB
R
P
P
L
GR
R
1 BB1
3 BB1
4 BB1
9 BB1
1 BC1
3 BC1
4 BC1
9 BC1
L–W
L–R
L–O
LG–B
7
8
4
5
+B
PCT
SU
SD
P11
Power Window SW Rear LH
P12
Power Window SW Rear RH
E
U
D
1
3
6
W–B
R
G
12 BB1
12 BC1
5
M
4
P 8
Power Window Motor
Rear LH
P 9
Power Window Motor
Rear RH
W–B
W–B
BA
BB
BR
LG
W
O
8 C
9 C
13 C
14 C
RRD
RRU
RLD
RLU
B 9(A), B10(B), B11(C), B12(D)
Body ECU

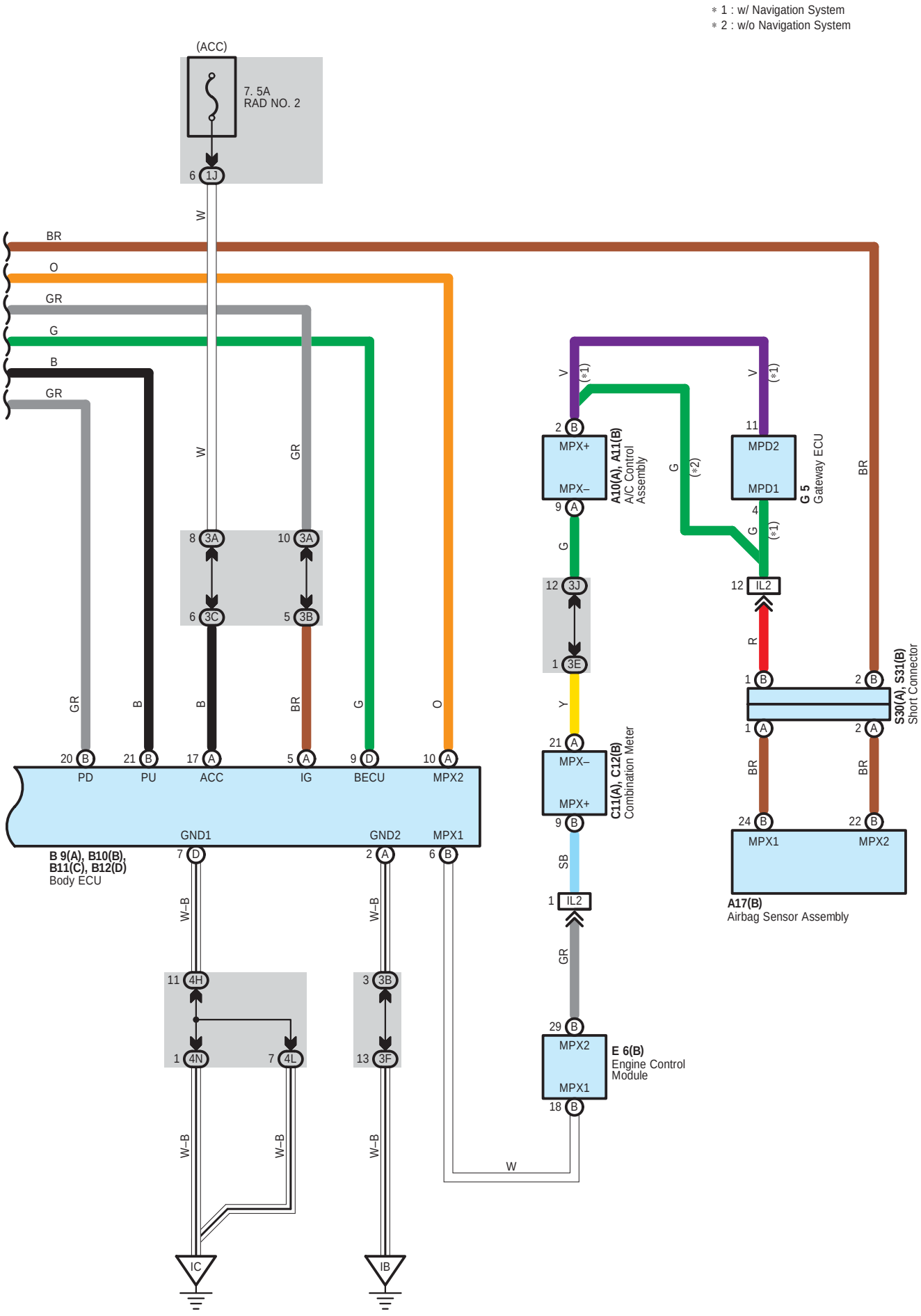
* 1 : w/ Navigation System
* 2 : w/o Navigation System
(ACC)
7. 5A
RAD NO. 2
6 1J
W
BR
O
GR
G
B
GR
W
GR
8 3A
10 3A
6 3C
5 3B
GR
B
B
BR
G
O
20 B
21 B
17 A
5 A
9 D
10 A
PD
PU
ACC
IG
BECU
MPX2
GND1
GND2
MPX1
B 9(A), B10(B),
B11(C), B12(D)
Body ECU
7 D
2 A
6 B
W–B
W–B
11 4H
1 4N
7 4L
3 3B
13 3F
W–B
W–B
W–B
IC
IB
W
V
(*1)
2 B
MPX+
MPX–
9 A
A10(A), A11(B)
A/C Control
Assembly
G
(*2)
G
12 3J
1 3E
Y
21 A
MPX–
MPX+
9 B
C11(A), C12(B)
Combination Meter
SB
1 IL2
GR
29 B
MPX2
MPX1
18 B
E 6(B)
Engine Control
Module
V
(*1)
11
MPD2
MPD1
G 5
Gateway ECU
BR
4
G
(*1)
12 IL2
R
1 B
2 B
S30(A), S31(B)
Short Connector
1 A
2 A
BR
BR
24 B
22 B
MPX1
MPX2
A17(B)
Airbag Sensor Assembly

System Outline

Communication between power window master SW and body ECU is controlled and body ECU recognizes the conditions of each SW to control the operation of windows.

1. Manual Up or Down Operation (Driver's Window, Passenger's Window)

During you are pushing power window master SW (Driver side) halfway down, the motor operates and the window on the driver's side opens. During you are pulling power window master SW (Driver side) halfway up, the motor operates and the windows on the driver's side closes. The window on the passenger's side opens or closes by pushing down or pulling up power window master SW (Front passenger, rear passenger) or power window SW front RH, rear LH, RH.

2. Auto Up or Down Operation (Driver's Window)

When the power window master SW (Driver side) is fully pushed down, the motor operates and the window on the driver's side automatically opens. When the power window master SW (Driver side) is fully pulled up, the motor operates and the window on the driver's side automatically closes.

3. Stopping Automatic Window Operation

If you push the power window master SW (Driver side) halfway down during the window on the driver's side is raising automatically, the motor's operation stops. And if you pull the power window master SW (Driver side) halfway up during the window on the driver's side is lowering automatically, the motor's operation stops.

4. Key Off Power Window Operation

After the ignition SW is turned off, the windows can be operated for about 43 seconds. However, the window operation stops when either front doors opens.

5. Jam Protection Function (Driver's Window)

When any foreign object gets caught during power window UP operation, the motor rotates in the opposite direction to open the window.

: Parts Location

Code		See Page	Code		See Page	Code		See Page
A10	A	42	C12	B	42	P9		44
A11	B	42	D12		44	P10		44
A17	B	42	E6	B	42	P11		44
B9	A	42	G5		43	P12		44
B10	B	42	P5		44	S30	A	43
B11	C	42	P6		44	S31	B	43
B12	D	42	P7		44			
C11	A	42	P8		44			

: Junction Block and Wire Harness Connector

Code	See Page	Junction Block and Wire Harness (Connector Location)
1D	29	Cowl Wire and Instrument Panel J/B (Lower Finish Panel)
1G		
1H		
1J	28	Instrument Panel Wire and Instrument Panel J/B (Lower Finish Panel)
1K		
2A	27	Engine Room Main Wire and Engine Room J/B (Engine Compartment Left)
3A	30	Instrument Panel Wire and Center J/B (Behind the Instrument Panel Center)
3B		
3C		
3E		
3F		
3J	31	
4A	33	Cowl Wire and Passenger Side J/B (Right Side of Grove Box)
4F		
4H		
4I	32	
4L		
4N		

: Connector Joining Wire Harness and Wire Harness

Code	See Page	Joining Wire Harness and Wire Harness (Connector Location)
IA1	50	Cowl Wire and Floor No.2 Wire (Left Kick Panel)
IB1	50	Front Door LH Wire and Cowl Wire (Left Kick Panel)
IB2		
IC3	50	Engine Room Main Wire and Cowl Wire (Left Cowl Side Panel)
IF3	50	Instrument Panel Wire and Cowl Wire (Right Side of Instrument Panel J/B)
IL1	51	Instrument Panel Wire and Cowl Wire (Upper Side of Passenger Side J/B)
IL2		
IN1	51	Front Door RH Wire and Cowl Wire (Right Kick Panel)
IN2		
IO1	51	Cowl Wire and Floor Wire (Right Kick Panel)
IO2		
BB1	52	Rear Door No.1 LH Wire and Floor No.2 Wire (Left Center Pillar)
BC1	52	Rear Door No.1 RH Wire and Floor Wire (Right Center Pillar)

: Ground Points

Code	See Page	Ground Points Location
IB	50	Right Instrument Panel Brace
IC	50	Right Cowl Side Panel
BA	52	Left Center Pillar
BB	52	Right Center Pillar

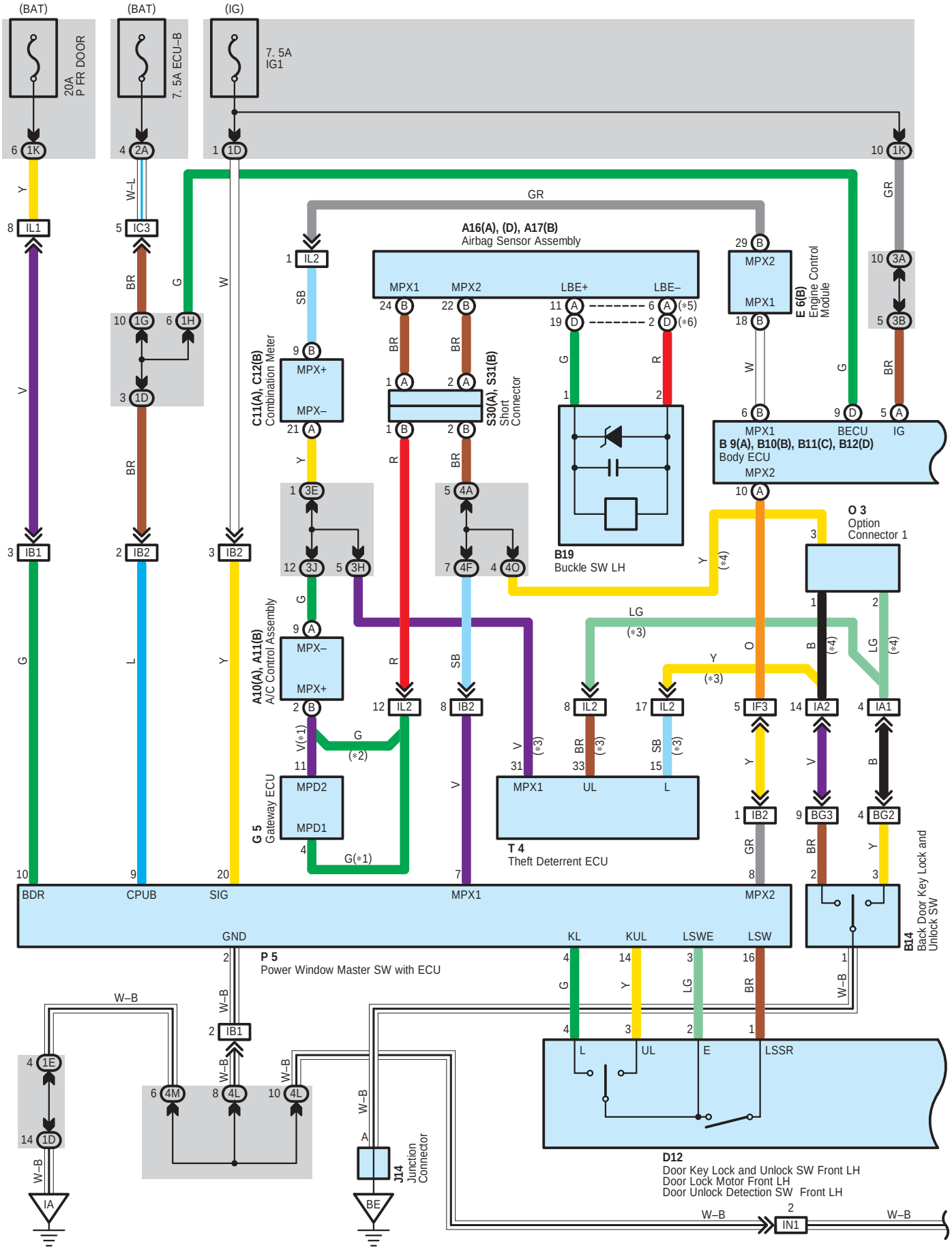
(BAT)
(BAT)
(IG)
20A P FR DOOR
7. 5A ECU–B
7. 5A IG1
A16(A), (D), A17(B) Airbag Sensor Assembly
C11(A), C12(B) Combination Meter
S30(A), S31(B) Short Connector
E 6(B) Engine Control Module
B19 Buckle SW LH
B 9(A), B10(B), B11(C), B12(D) Body ECU
O 3 Option Connector 1
A10(A), A11(B) A/C Control Assembly
G 5 Gateway ECU
T 4 Theft Deterrent ECU
P 5 Power Window Master SW with ECU
B14 Back Door Key Lock and Unlock SW
D12 Door Key Lock and Unlock SW Front LH
Door Lock Motor Front LH
Door Unlock Detection SW Front LH
J14 Junction Connector
BDR
CPUB
SIG
MPX1
MPX2
GND
KL
KUL
LSWE
LSW
LSSR
IA
BE
IN1

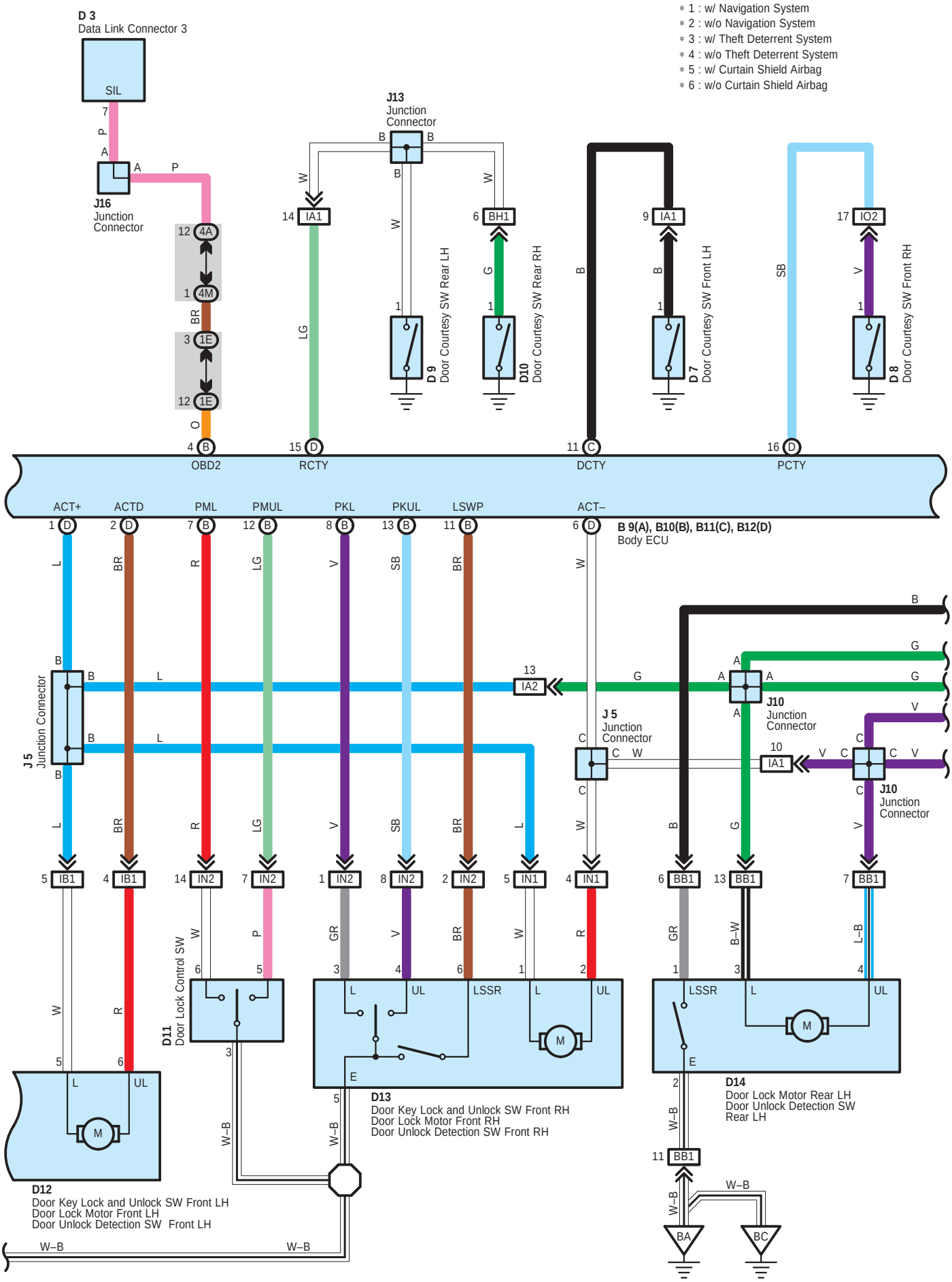
∗ 1 : w/ Navigation System
∗ 2 : w/o Navigation System
∗ 3 : w/ Theft Deterrent System
∗ 4 : w/o Theft Deterrent System
∗ 5 : w/ Curtain Shield Airbag
∗ 6 : w/o Curtain Shield Airbag
D 3
Data Link Connector 3
SIL
J16
Junction Connector
J13
Junction Connector
D 9
Door Courtesy SW Rear LH
D10
Door Courtesy SW Rear RH
D 7
Door Courtesy SW Front LH
D 8
Door Courtesy SW Front RH
OBD2
RCTY
DCTY
PCTY
ACT+
ACTD
PML
PMUL
PKL
PKUL
LSWP
ACT–
B 9(A), B10(B), B11(C), B12(D)
Body ECU
J 5
Junction Connector
J10
Junction Connector
D11
Door Lock Control SW
D12
Door Key Lock and Unlock SW Front LH
Door Lock Motor Front LH
Door Unlock Detection SW Front LH
D13
Door Key Lock and Unlock SW Front RH
Door Lock Motor Front RH
Door Unlock Detection SW Front RH
D14
Door Lock Motor Rear LH
Door Unlock Detection SW
Rear LH
W–B

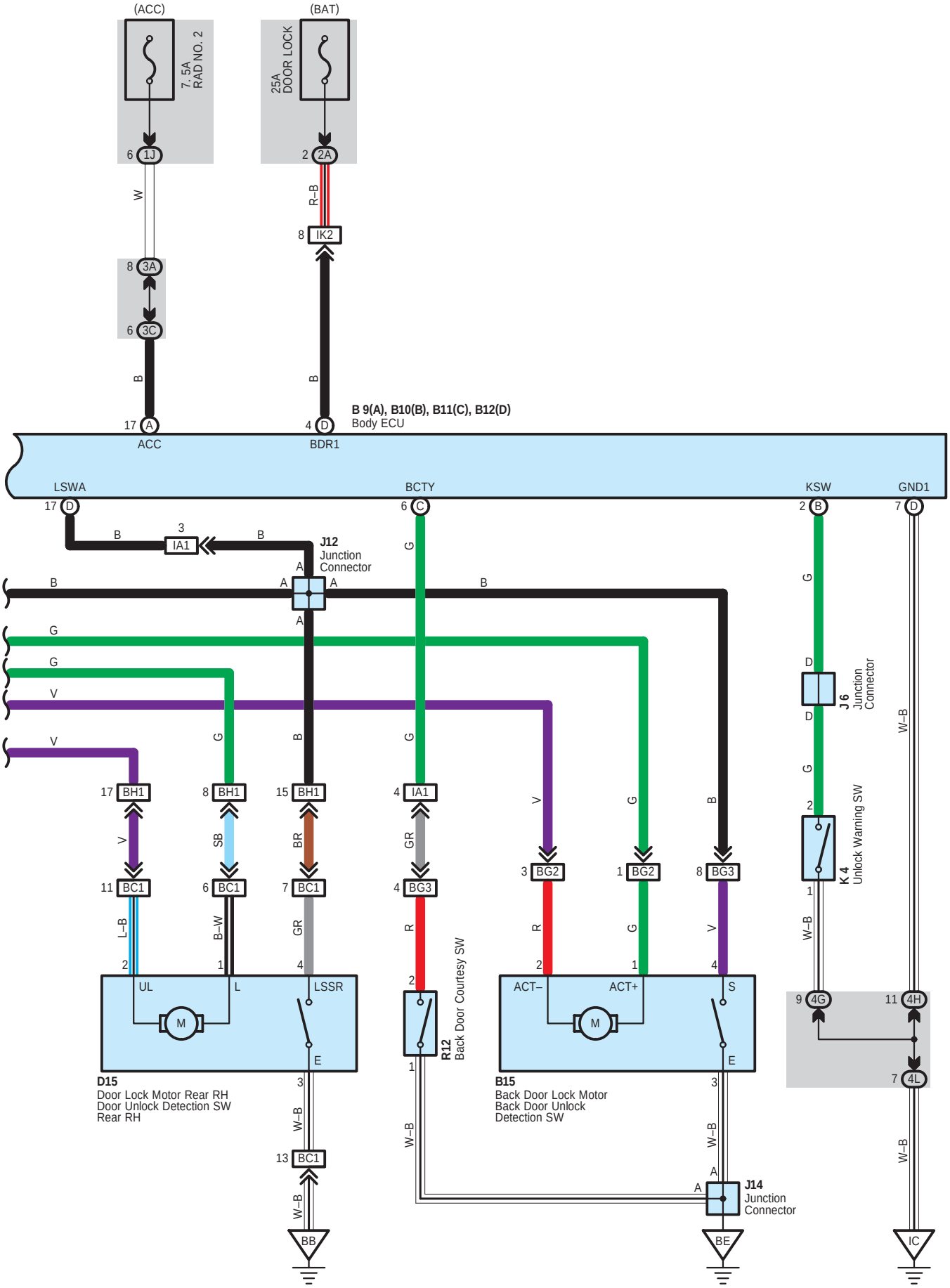
(ACC)
(BAT)
7.5A RAD NO. 2
25A DOOR LOCK
6 1J
2 2A
W
R–B
8 3A
8 IK2
6 3C
B
B
17 A
ACC
4 D
BDR1
B 9(A), B10(B), B11(C), B12(D)
Body ECU
LSWA
BCTY
KSW
GND1
17 D
6 C
2 B
7 D
B
3 IA1
B
J12
Junction Connector
A
A
A
A
B
B
G
G
V
V
G
B
G
V
17 BH1
8 BH1
15 BH1
4 IA1
V
G
B
G
V
SB
BR
GR
3 BG2
1 BG2
8 BG3
11 BC1
6 BC1
7 BC1
4 BG3
R
G
V
L–B
B–W
GR
R
2
1
4
2
2
1
4
UL
L
LSSR
M
E
ACT–
ACT+
S
M
E
D15
Door Lock Motor Rear RH
Door Unlock Detection SW
Rear RH
R12
Back Door Courtesy SW
B15
Back Door Lock Motor
Back Door Unlock
Detection SW
3
1
3
W–B
W–B
W–B
13 BC1
W–B
A
J14
Junction Connector
BB
BE
IC
G
D
D
G
2
J6
Junction Connector
K4
Unlock Warning SW
1
W–B
9 4G
11 4H
7 4L
W–B
W–B

System Outline

The door lock control is controlled through the various signals input into the body ECU through communication control of the body ECU etc.

1. Manual Operation

All doors can be Locked/Unlocked through the operation of the driver and passenger side door lock control SW.

2. Double Operation Unlock Operation

When the door key lock and unlock SW front LH is turned to the unlock side, only the driver's door is unlocked. And if the door key lock and unlock SW front LH is turned to the unlock side again within 3 seconds, all the doors to unlock.

3. Manual Unlock Protection

Once the doors are locked by the door knob (Key less operation), the door key or the transmitter, they can not be unlocked by the door lock control SW. The protection is canceled when the ignition SW is turned on or unlock operation is made by the door key or the transmitter.

4. Ignition Key Reminder Operation

When the door lock operation is made using the door knob with the ignition key remained inserted in the key cylinder and the door open, unlock operation is automatically made. Additionally, if lock operation is made with the door lock control SW or door key lock and unlock SW, unlock operation is automatically made after the lock operation has been completed.

○ : Parts Location

Code	See Page	Code	See Page	Code	See Page
A10 A	42	C12 B	42	J6	43
A11 B	42	D3	42	J10	44
A16 A	42	D7	44	J12	44
A16 D	42	D8	44	J13	44
A17 B	42	D9	44	J14	44
B9 A	42	D10	44	J16	43
B10 B	42	D11	44	K4	43
B11 C	42	D12	44	O3	43
B12 D	42	D13	44	P5	44
B14	44	D14	44	R12	45
B15	44	D15	44	S30 A	43
B19	46 (*1)	E6 B	42	S31 B	43
	47 (*2)	G5	43	T4	43
C11 A	42	J5	43		

* 1 : w/ Power Seat * 2 : w/o Power Seat

Door Lock Control

: Junction Block and Wire Harness Connector

Code	See Page	Junction Block and Wire Harness (Connector Location)
1D	29	Cowl Wire and Instrument Panel J/B (Lower Finish Panel)
1E		
1G		
1H		
1J	28	Instrument Panel Wire and Instrument Panel J/B (Lower Finish Panel)
1K		
2A	27	Engine Room Main Wire and Engine Room J/B (Engine Compartment Left)
3A	30	Instrument Panel Wire and Center J/B (Behind the Instrument Panel Center)
3B		
3C		
3E		
3H	31	
3J		
4A	33	Cowl Wire and Passenger Side J/B (Right Side of Grove Box)
4F		
4G		
4H		
4L	32	
4M		
4O		

: Connector Joining Wire Harness and Wire Harness

Code	See Page	Joining Wire Harness and Wire Harness (Connector Location)
IA1	50	Cowl Wire and Floor No.2 Wire (Left Kick Panel)
IA2		
IB1	50	Front Door LH Wire and Cowl Wire (Left Kick Panel)
IB2		
IC3	50	Engine Room Main Wire and Cowl Wire (Left Cowl Side Panel)
IF3	50	Instrument Panel Wire and Cowl Wire (Right Side of Instrument Panel J/B)
IK2	51	Engine Room Main Wire and Cowl Wire (Right Cowl Side Panel)
IL1	51	Instrument Panel Wire and Cowl Wire (Upper Side of Passenger Side J/B)
IL2		
IN1	51	Front Door RH Wire and Cowl Wire (Right Kick Panel)
IN2		
IO2	51	Cowl Wire and Floor Wire (Right Kick Panel)
BB1	52	Rear Door No.1 LH Wire and Floor No.2 Wire (Left Center Pillar)
BC1	52	Rear Door No.1 RH Wire and Floor Wire (Right Center Pillar)
BG2	52	Back Door No.1 Wire and Floor No.2 Wire (Rear Left of the Roof)
BG3		
BH1	52	Floor No.2 Wire and Floor Wire (Near the Rear Side Marker Light RH)

: Ground Points

Code	See Page	Ground Points Location
IA	50	Left Cowl Side Panel
IC	50	Right Cowl Side Panel
BA	52	Left Center Pillar
BB	52	Right Center Pillar
BC	52	Left Side of Rear Cross Member
BE	52	Left Side of Back Door

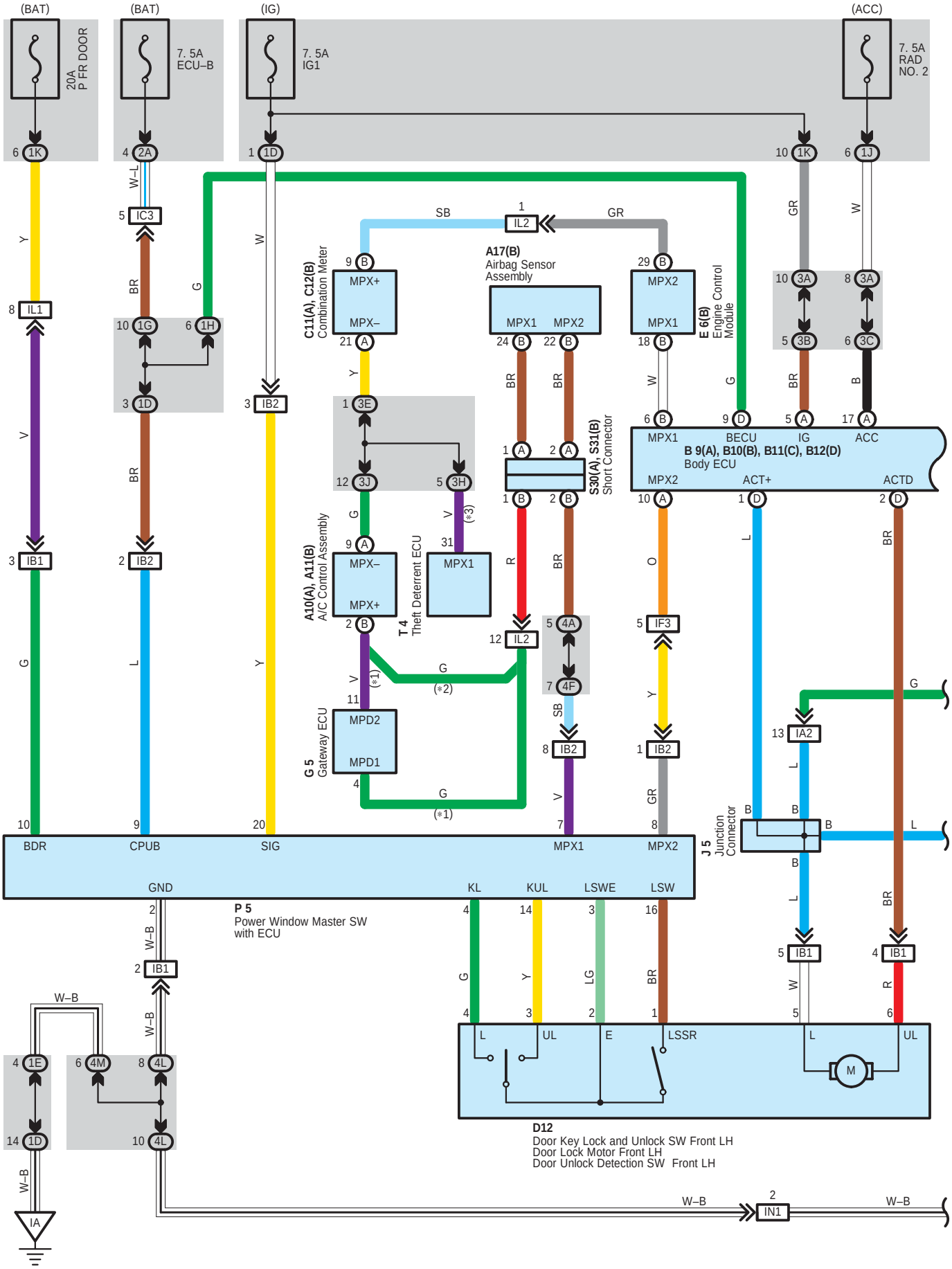
(BAT)
20A P FR DOOR
(BAT)
7. 5A ECU–B
(IG)
7. 5A IG1
(ACC)
7. 5A RAD NO. 2
C11(A), C12(B) Combination Meter
MPX+
MPX–
A17(B) Airbag Sensor Assembly
MPX1
MPX2
E 6(B) Engine Control Module
S30(A), S31(B) Short Connector
B 9(A), B10(B), B11(C), B12(D) Body ECU
BECU
IG
ACC
ACT+
ACTD
A10(A), A11(B) A/C Control Assembly
T 4 Theft Deterrent ECU
G 5 Gateway ECU
MPD2
MPD1
J 5 Junction Connector
BDR
CPUB
SIG
GND
P 5 Power Window Master SW with ECU
KL
KUL
LSWE
LSW
D12
Door Key Lock and Unlock SW Front LH
Door Lock Motor Front LH
Door Unlock Detection SW Front LH
L
UL
E
LSSR
M
IA
IN1

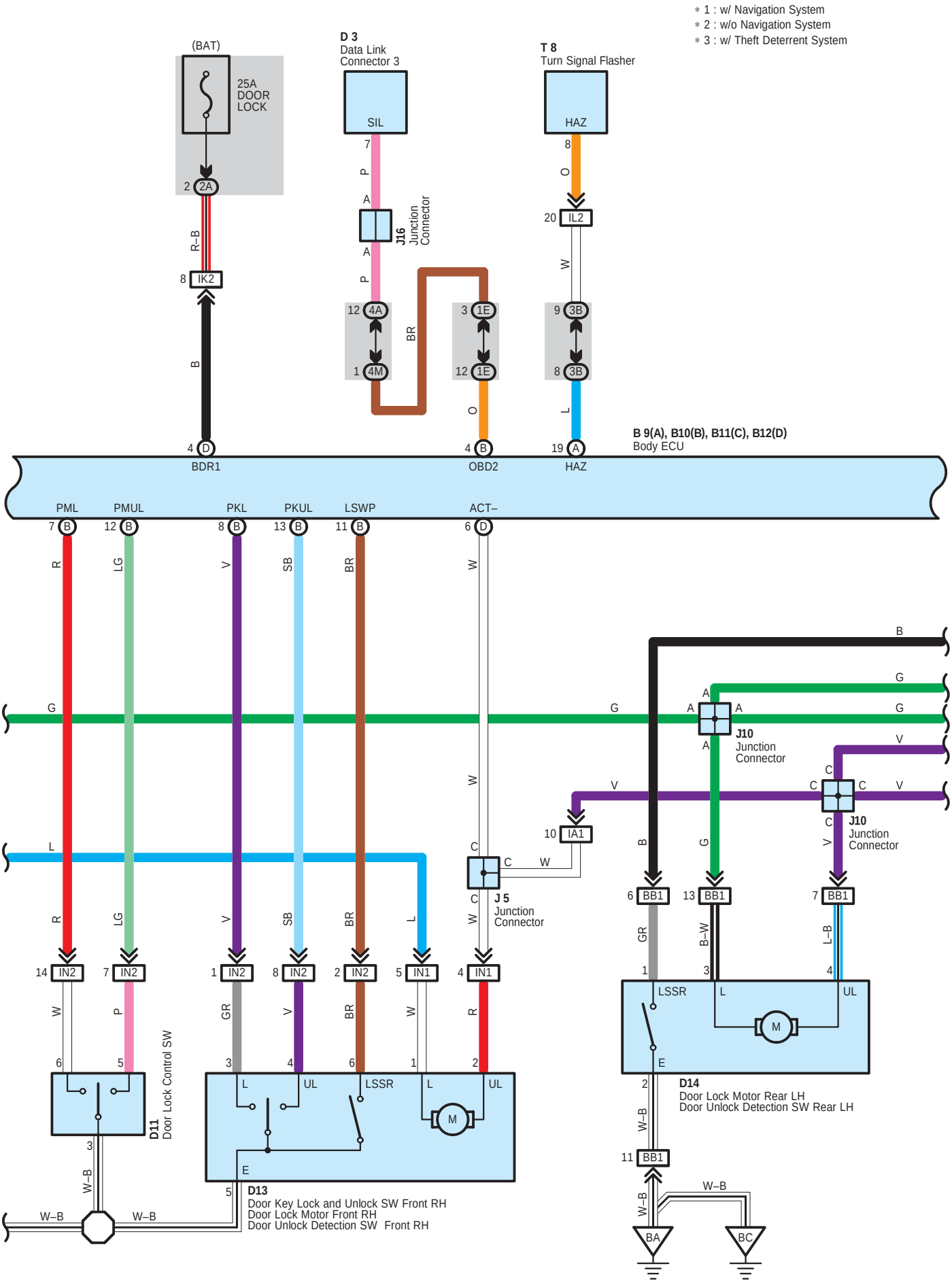
∗ 1 : w/ Navigation System
∗ 2 : w/o Navigation System
∗ 3 : w/ Theft Deterrent System
(BAT)
25A DOOR LOCK
2A
R–B
IK2
B
BDR1
D 3
Data Link Connector 3
SIL
P
A
J16 Junction Connector
A
P
4A
4M
BR
1E
1E
O
OBD2
T 8
Turn Signal Flasher
HAZ
O
IL2
W
3B
3B
L
HAZ
B 9(A), B10(B), B11(C), B12(D)
Body ECU
PML
PMUL
PKL
PKUL
LSWP
ACT–
R
LG
V
SB
BR
W
G
L
IA1
J 5 Junction Connector
J10 Junction Connector
J10 Junction Connector
B
G
V
BB1
GR
B–W
L–B
IN2
IN1
W
P
GR
V
BR
L
R
D11 Door Lock Control SW
D13
Door Key Lock and Unlock SW Front RH
Door Lock Motor Front RH
Door Unlock Detection SW Front RH
LSSR
L
UL
M
E
D14
Door Lock Motor Rear LH
Door Unlock Detection SW Rear LH
W–B
BA
BC

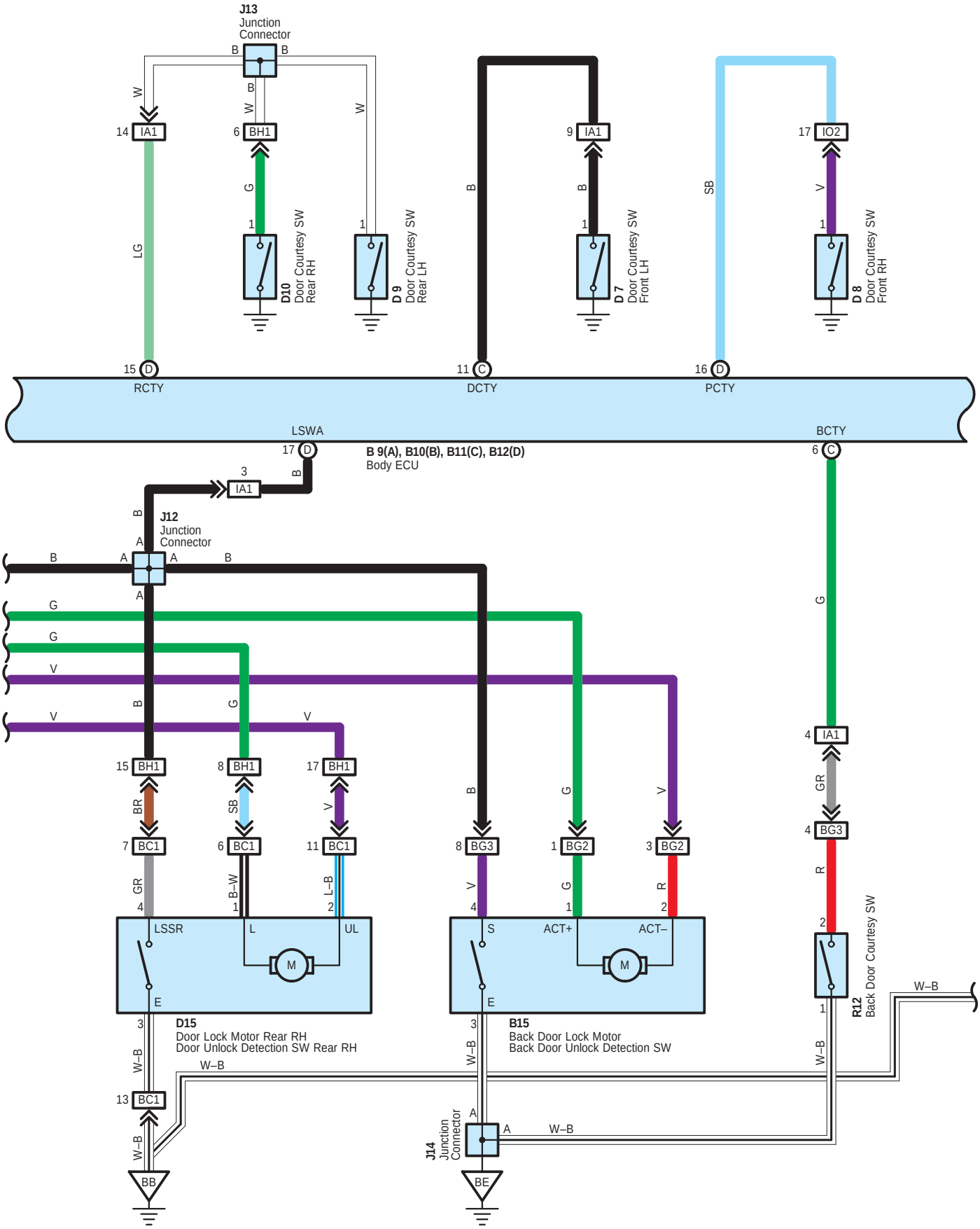
J13
Junction
Connector
B
B
B
W
W
W
14 IA1
6 BH1
9 IA1
17 IO2
G
B
B
V
SB
LG
1
1
1
1
D10
Door Courtesy SW
Rear RH
D 9
Door Courtesy SW
Rear LH
D 7
Door Courtesy SW
Front LH
D 8
Door Courtesy SW
Front RH
15 D
RCTY
11 C
DCTY
16 D
PCTY
LSWA
17 D
B 9(A), B10(B), B11(C), B12(D)
Body ECU
BCTY
6 C
3
IA1
B
J12
Junction
Connector
A
A
A
B
B
B
G
G
V
V
B
G
V
15 BH1
8 BH1
17 BH1
BR
SB
V
7 BC1
6 BC1
11 BC1
GR
B–W
L–B
4
1
2
LSSR
L
UL
M
E
3
W–B
13 BC1
W–B
BB
D15
Door Lock Motor Rear RH
Door Unlock Detection SW Rear RH
W–B
8 BG3
1 BG2
3 BG2
B
G
V
V
G
R
4
1
2
S
ACT+
ACT–
M
E
3
W–B
B15
Back Door Lock Motor
Back Door Unlock Detection SW
J14
Junction
Connector
A
A
W–B
BE
4 IA1
GR
4 BG3
R
2
1
W–B
W–B
R12
Back Door Courtesy SW

∗ 4 : w/ Engine Immobiliser System
∗ 5 : w/o Engine Immobiliser System

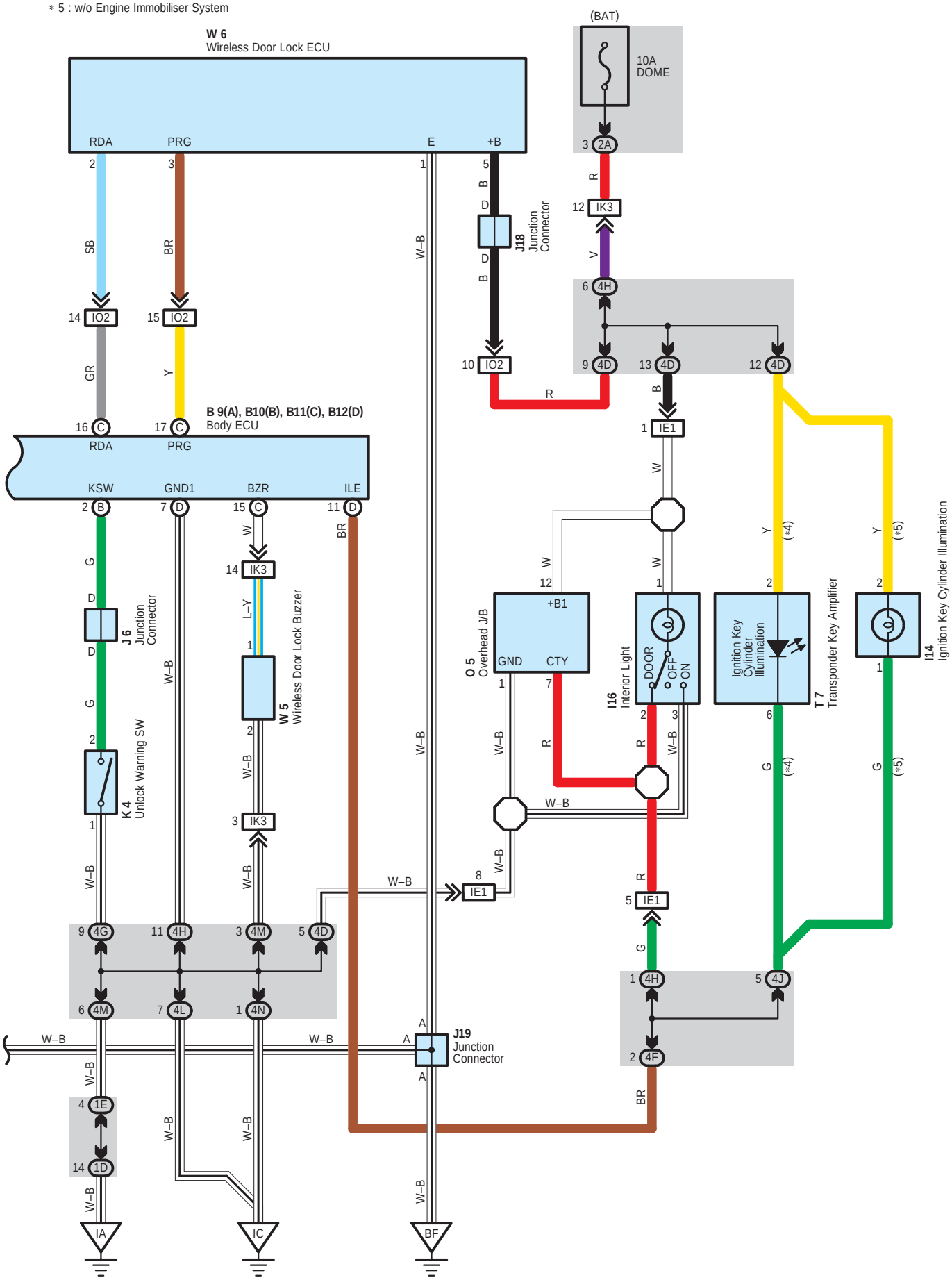

Wireless Door Lock Control

System Outline

In this system, the wireless door lock ECU receivers weak radio wave transmitted from the transmitter and outputs a signal to the body ECU. Accordingly, all the doors are can be locked and unlocked by remote control.

1. Normal Operation

* Lock operation
  When the lock SW on the transmitter is pressed, all the doors are locked.
* Unlock operation
  When the unlock SW on the transmitter is pressed once, only the driver door is unlocked. When the unlock SW is pressed again within 3 seconds, all the doors are unlocked.

2. Auto Lock Function

After all the doors are unlocked by pushing the UNLOCK SW of the transmitter, unless each of the doors is opened or the ignition key is inserted, all the doors are locked again.

3. Wireless Door Lock Stop Function

If any of the following conditions are detected, the wireless door lock does not function.
Lock operation
* When any door is open (Door courtesy SW on)
* The ignition key is inserted into the ignition SW (Unlock warning SW on)
* Ignition SW is on

Unlock operation
* Ignition SW is on

4. Visual Confirmation of Lock or Unlock

When doors are locked by using the transmitter, the hazard light flashes once. When doors are unlocked by using the transmitter, the hazard light flashes twice. If UNLOCK SW of the transmitter is pushed while all the doors are locked, doors are unlocked and the interior light and ignition key cylinder light are turned on simultaneously.

5. Panic Mode Function

When the panic SW on the transmitter is pressed, the panic mode is activated. The panic mode is canceled when the unlock SW or panic SW is pressed.

6. Repeat Function

If the lock detection signal in response to the output signal is not received after the wireless door lock ECU has output the lock signal, the lock signal is output again.

○ : Parts Location

Code	See Page	Code	See Page	Code	See Page
A10 A	42	D11	44	J16	43
A11 B	42	D12	44	J18	44
A17 B	42	D13	44	J19	44
B9 A	42	D14	44	K4	43
B10 B	42	D15	44	O5	44
B11 C	42	E6 B	42	P5	44
B12 D	42	G5	43	R12	45
B15	44	I14	43	S30 A	43
C11 A	42	I16	44	S31 B	43
C12 B	42	J5	43	T4	43
D3	42	J6	43	T7	43
D7	44	J10	44	T8	43
D8	44	J12	44	W5	39 (3MZ–FE)
D9	44	J13	44		41 (2AZ–FE)
D10	44	J14	44	W6	45

: **Junction Block and Wire Harness Connector**

Code	See Page	Junction Block and Wire Harness (Connector Location)
1D	29	Cowl Wire and Instrument Panel J/B (Lower Finish Panel)
1E		
1G		
1H		
1J	28	Instrument Panel Wire and Instrument Panel J/B (Lower Finish Panel)
1K		
2A	27	Engine Room Main Wire and Engine Room J/B (Engine Compartment Left)
3A	30	Instrument Panel Wire and Center J/B (Behind the Instrument Panel Center)
3B		
3C		
3E		
3H	31	
3J		
4A	33	Cowl Wire and Passenger Side J/B (Right Side of Grove Box)
4D		
4F		
4G		
4H		
4J	32	
4L		
4M		
4N		

: **Connector Joining Wire Harness and Wire Harness**

Code	See Page	Joining Wire Harness and Wire Harness (Connector Location)
IA1	50	Cowl Wire and Floor No.2 Wire (Left Kick Panel)
IA2		
IB1	50	Front Door LH Wire and Cowl Wire (Left Kick Panel)
IB2		
IC3	50	Engine Room Main Wire and Cowl Wire (Left Cowl Side Panel)
IE1	50	Roof Wire and Cowl Wire (Near the Bottom of Left Front Pillar)
IF3	50	Instrument Panel Wire and Cowl Wire (Right Side of Instrument Panel J/B)
IK2	51	Engine Room Main Wire and Cowl Wire (Right Cowl Side Panel)
IK3		
IL1	51	Instrument Panel Wire and Cowl Wire (Upper Side of Passenger Side J/B)
IL2		
IN1	51	Front Door RH Wire and Cowl Wire (Right Kick Panel)
IN2		
IO2	51	Cowl Wire and Floor Wire (Right Kick Panel)
BB1	52	Rear Door No.1 LH Wire and Floor No.2 Wire (Left Center Pillar)
BC1	52	Rear Door No.1 RH Wire and Floor Wire (Right Center Pillar)
BG2	52	Back Door No.1 Wire and Floor No.2 Wire (Rear Left of the Roof)
BG3		
BH1	52	Floor No.2 Wire and Floor Wire (Near the Rear Side Marker Light RH)

▽ : **Ground Points**

Code	See Page	Ground Points Location
IA	50	Left Cowl Side Panel
IC	50	Right Cowl Side Panel
BA	52	Left Center Pillar
BB	52	Right Center Pillar
BC	52	Left Side of Rear Cross Member
BE	52	Left Side of Back Door
BF	52	Near the Rear Side Marker Light RH

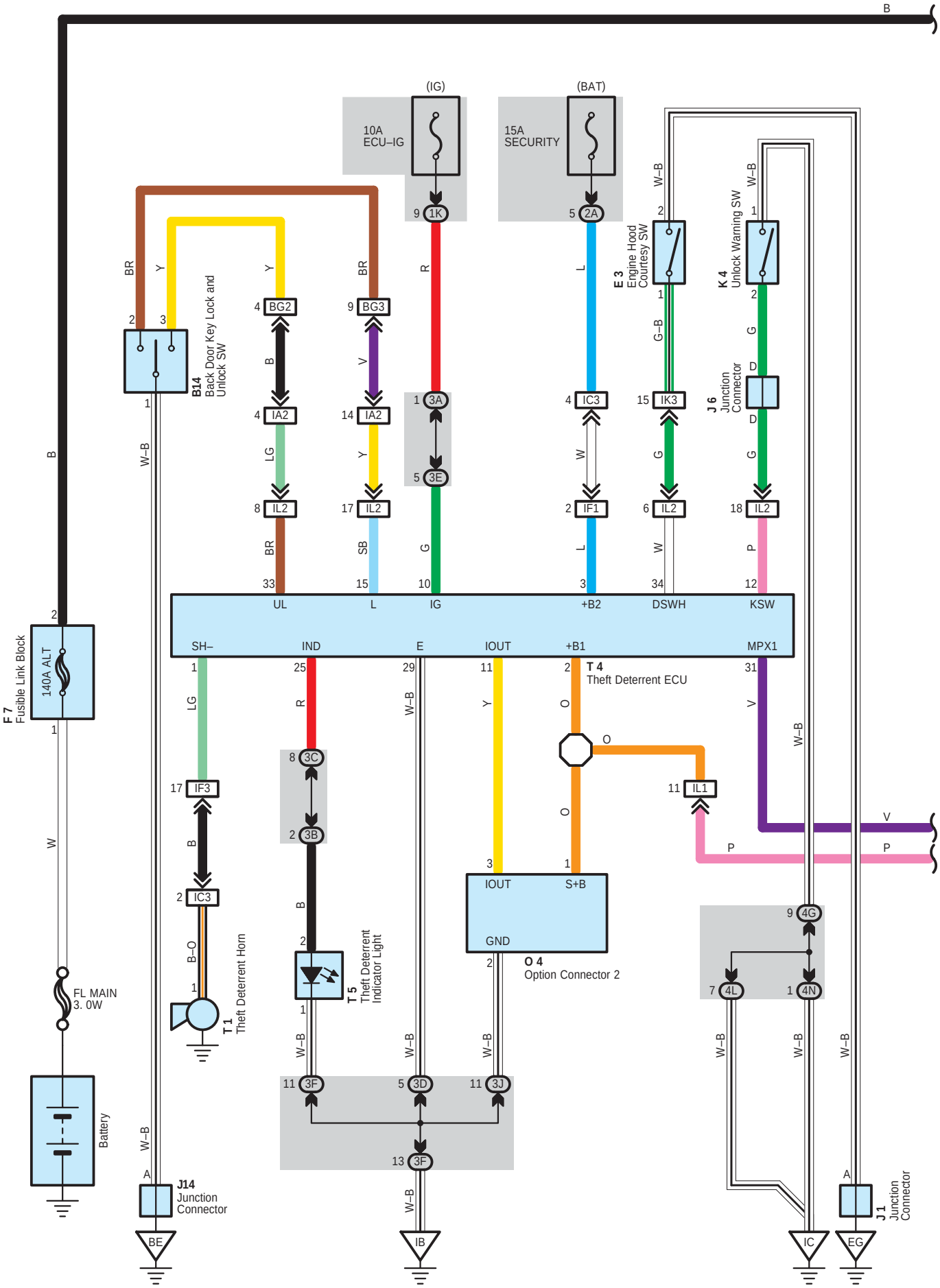
B
(IG)
(BAT)
10A
ECU–IG
15A
SECURITY
9 1K
5 2A
W–B
2
1
E 3
Engine Hood
Courtesy SW
K 4
Unlock Warning SW
BR
Y
B14
Back Door Key Lock and
Unlock SW
4 BG2
9 BG3
B
V
R
L
G–B
G
D
J 6
Junction
Connector
4 IA2
14 IA2
1 3A
5 3E
4 IC3
15 IK3
LG
Y
W
G
8 IL2
17 IL2
2 IF1
6 IL2
18 IL2
BR
SB
L
W
P
33
15
10
3
34
12
UL
L
IG
+B2
DSWH
KSW
F 7
Fusible Link Block
140A ALT
SH–
IND
E
IOUT
+B1
MPX1
T 4
Theft Deterrent ECU
25
29
11
2
31
17 IF3
8 3C
2 3B
11 IL1
O
2 IC3
B–O
T 1
Theft Deterrent Horn
T 5
Theft Deterrent
Indicator Light
3
1
IOUT
S+B
GND
O 4
Option Connector 2
9 4G
7 4L
1 4N
FL MAIN
3. 0W
Battery
11 3F
5 3D
11 3J
13 3F
A
J14
Junction
Connector
J1
Junction
Connector
BE
IB
IC
EG

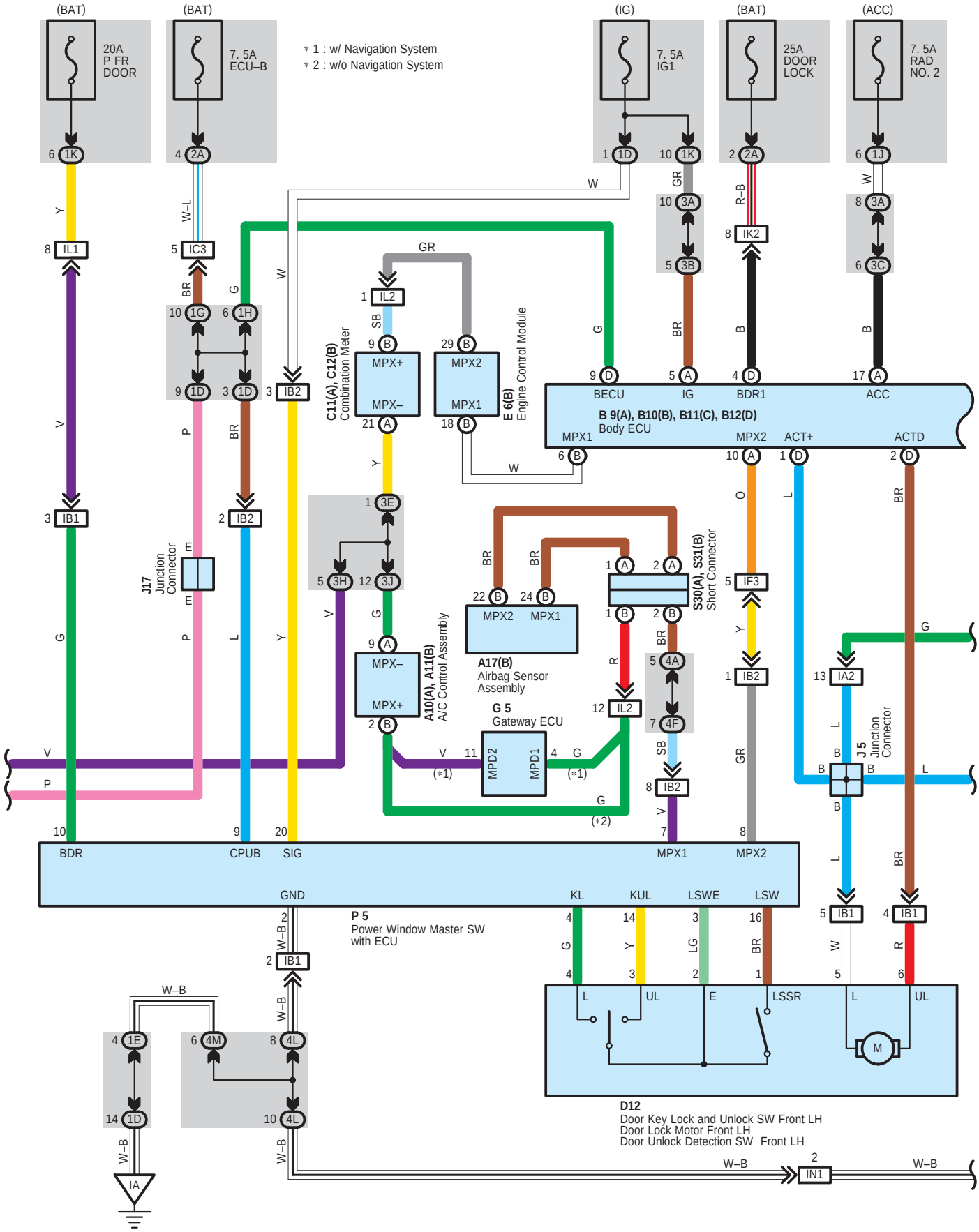
B
B
(BAT)
20A
P FR
DOOR
(BAT)
7. 5A
ECU–B
∗ 1 : w/ Navigation System
∗ 2 : w/o Navigation System
(IG)
7. 5A
IG1
(BAT)
25A
DOOR
LOCK
(ACC)
7. 5A
RAD
NO. 2
6 1K
4 2A
1 1D
10 1K
2 2A
6 1J
8 IL1
5 IC3
10 3A
8 IK2
8 3A
5 3B
6 3C
10 1G
6 1H
9 1D
3 1D
3 IB2
1 IL2
9 B
29 B
MPX+
MPX–
MPX2
MPX1
21 A
18 B
C11(A), C12(B)
Combination Meter
E 6(B)
Engine Control Module
9 D
5 A
4 D
17 A
BECU
IG
BDR1
ACC
B 9(A), B10(B), B11(C), B12(D)
Body ECU
MPX1
6 B
MPX2
10 A
ACT+
1 D
ACTD
2 D
3 IB1
2 IB2
1 3E
5 3H
12 3J
J17
Junction
Connector
22 B
24 B
MPX2
MPX1
A17(B)
Airbag Sensor
Assembly
1 A
2 A
1 B
2 B
S30(A), S31(B)
Short Connector
5 4A
7 4F
8 IB2
9 A
MPX–
MPX+
2 B
A10(A), A11(B)
A/C Control Assembly
G 5
Gateway ECU
12 IL2
V
(∗1)
11
MPD2
MPD1
4
G
(∗1)
G
(∗2)
5 IF3
1 IB2
13 IA2
J5
Junction
Connector
10
BDR
9
CPUB
20
SIG
7
MPX1
8
MPX2
GND
2
W–B
2 IB1
P 5
Power Window Master SW
with ECU
KL
KUL
LSWE
LSW
4
14
3
16
L
UL
E
LSSR
L
UL
M
5 IB1
4 IB1
W–B
4 1E
6 4M
8 4L
14 1D
10 4L
IA
D12
Door Key Lock and Unlock SW Front LH
Door Lock Motor Front LH
Door Unlock Detection SW Front LH
W–B
2
IN1
W–B

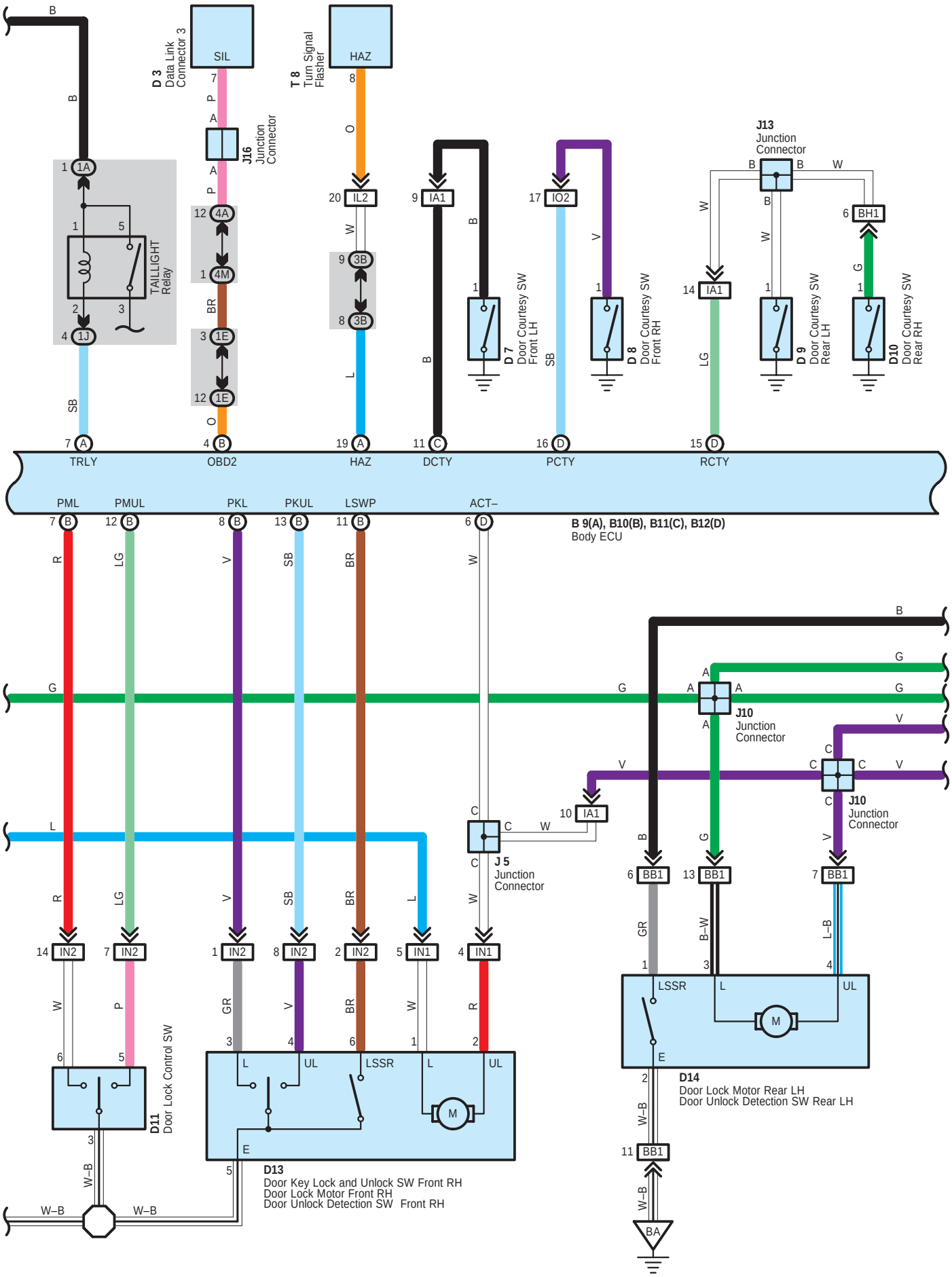
D 3
Data Link Connector 3
SIL
T 8
Turn Signal Flasher
HAZ
J16
Junction Connector
J13
Junction Connector
TAILLIGHT Relay
D 7
Door Courtesy SW Front LH
D 8
Door Courtesy SW Front RH
D 9
Door Courtesy SW Rear LH
D10
Door Courtesy SW Rear RH
TRLY
OBD2
HAZ
DCTY
PCTY
RCTY
PML
PMUL
PKL
PKUL
LSWP
ACT–
B 9(A), B10(B), B11(C), B12(D)
Body ECU
J10
Junction Connector
J 5
Junction Connector
D11
Door Lock Control SW
D13
Door Key Lock and Unlock SW Front RH
Door Lock Motor Front RH
Door Unlock Detection SW Front RH
D14
Door Lock Motor Rear LH
Door Unlock Detection SW Rear LH

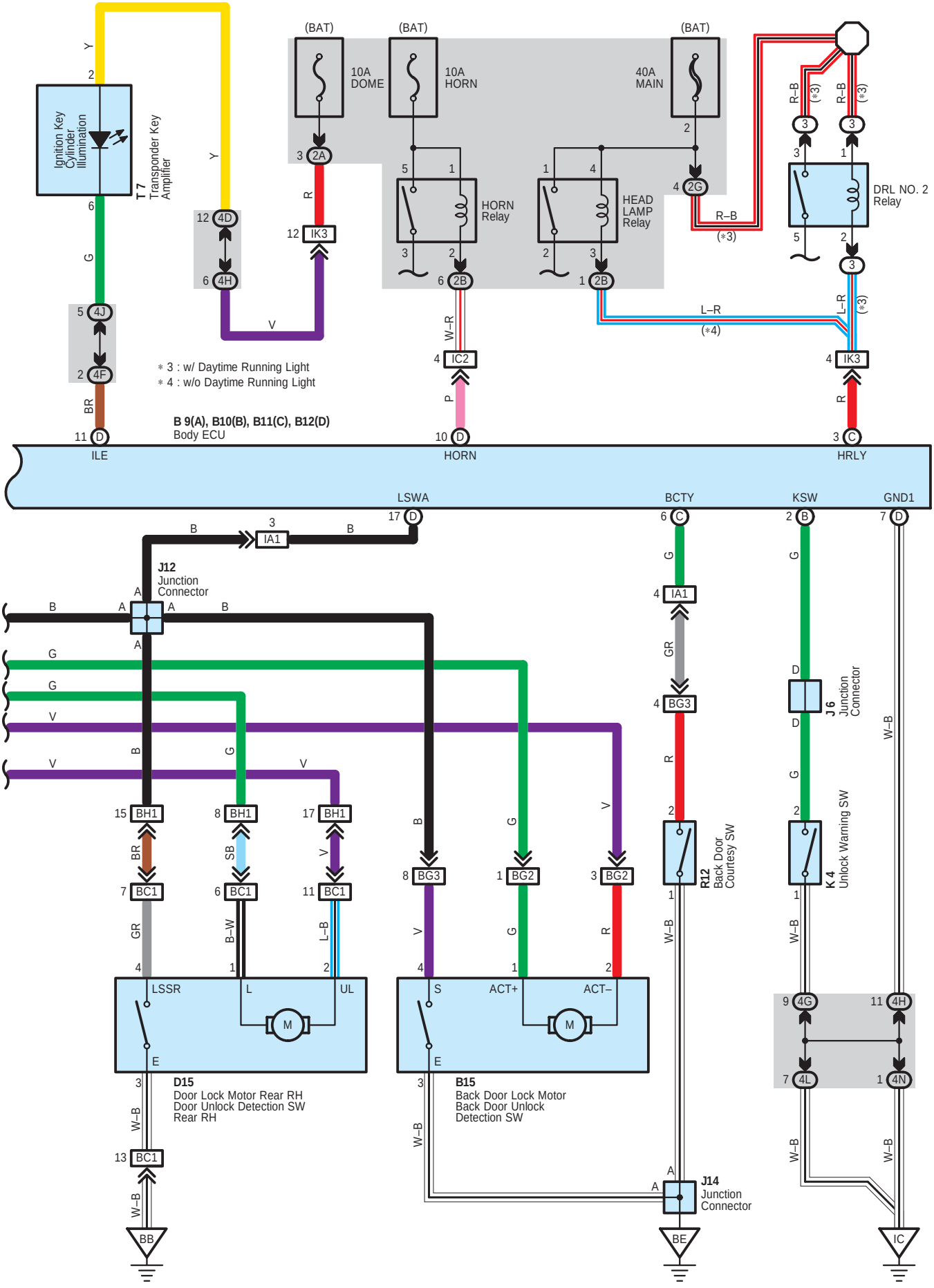
Ignition Key Cylinder Illumination
T 7
Transponder Key Amplifier
(BAT)
10A DOME
10A HORN
40A MAIN
HORN Relay
HEAD LAMP Relay
DRL NO. 2 Relay
* 3 : w/ Daytime Running Light
* 4 : w/o Daytime Running Light
B 9(A), B10(B), B11(C), B12(D)
Body ECU
ILE
HORN
HRLY
LSWA
BCTY
KSW
GND1
J12
Junction Connector
D15
Door Lock Motor Rear RH
Door Unlock Detection SW
Rear RH
B15
Back Door Lock Motor
Back Door Unlock
Detection SW
R12
Back Door Courtesy SW
J6
Junction Connector
K4
Unlock Warning SW
J14
Junction Connector
BB
BE
IC

Theft Deterrent System

○ : Parts Location

Code	See Page	Code	See Page	Code	See Page
A10 A	42	D11	44	J13	44
A11 B	42	D12	44	J14	44
A17 B	42	D13	44	J16	43
B9 A	42	D14	44	J17	43
B10 B	42	D15	44	K4	43
B11 C	42	E3	38 (3MZ–FE)	O4	43
B12 D	42	E6 B	42	P5	44
B14	44	F7	38 (3MZ–FE)	R12	45
B15	44		40 (2AZ–FE)	S30 A	43
C11 A	42	G5	43	S31 B	43
C12 B	42	J1	39 (3MZ–FE)	T1	39 (3MZ–FE)
D3	42		41 (2AZ–FE)	T4	43
D7	44	J5	43	T5	43
D8	44	J6	43	T7	43
D9	44	J10	44	T8	43
D10	44	J12	44		

⬭ : Relay Blocks

Code	See Page	Relay Blocks (Relay Block Location)
3	23	Engine Room R/B No.3 (Engine Compartment Rear Left)

⬭ : Junction Block and Wire Harness Connector

Code	See Page	Junction Block and Wire Harness (Connector Location)
1A	29	Engine Room Main Wire and Instrument Panel J/B (Lower Finish Panel)
1D	29	Cowl Wire and Instrument Panel J/B (Lower Finish Panel)
1E		
1G		
1H		
1J	28	Instrument Panel Wire and Instrument Panel J/B (Lower Finish Panel)
1K		
2A	27	Engine Room Main Wire and Engine Room J/B (Engine Compartment Left)
2B		
2G		
3A	30	Instrument Panel Wire and Center J/B (Behind the Instrument Panel Center)
3B		
3C		
3D		
3E		
3F		
3H	31	
3J		
4A	33	Cowl Wire and Passenger Side J/B (Right Side of Grove Box)
4D		
4F		
4G		
4H		
4J	32	
4L		
4M		
4N		

: **Connector Joining Wire Harness and Wire Harness**

Code	See Page	Joining Wire Harness and Wire Harness (Connector Location)
IA1	50	Cowl Wire and Floor No.2 Wire (Left Kick Panel)
IA2		
IB1	50	Front Door LH Wire and Cowl Wire (Left Kick Panel)
IB2		
IC2	50	Engine Room Main Wire and Cowl Wire (Left Cowl Side Panel)
IC3		
IF1	50	Instrument Panel Wire and Cowl Wire (Right Side of Instrument Panel J/B)
IF3		
IK2	51	Engine Room Main Wire and Cowl Wire (Right Cowl Side Panel)
IK3		
IL1	51	Instrument Panel Wire and Cowl Wire (Upper Side of Passenger Side J/B)
IL2		
IN1	51	Front Door RH Wire and Cowl Wire (Right Kick Panel)
IN2		
IO2	51	Cowl Wire and Floor Wire (Right Kick Panel)
BB1	52	Rear Door No.1 LH Wire and Floor No.2 Wire (Left Center Pillar)
BC1	52	Rear Door No.1 RH Wire and Floor Wire (Right Center Pillar)
BG2	52	Back Door No.1 Wire and Floor No.2 Wire (Rear Left of the Roof)
BG3		
BH1	52	Floor No.2 Wire and Floor Wire (Near the Rear Side Marker Light RH)

: **Ground Points**

Code	See Page	Ground Points Location
EG	48 (3MZ–FE)	Under the Left Headlight
	49 (2AZ–FE)	
IA	50	Left Cowl Side Panel
IB	50	Right Instrument Panel Brace
IC	50	Right Cowl Side Panel
BA	52	Left Center Pillar
BB	52	Right Center Pillar
BE	52	Left Side of Back Door

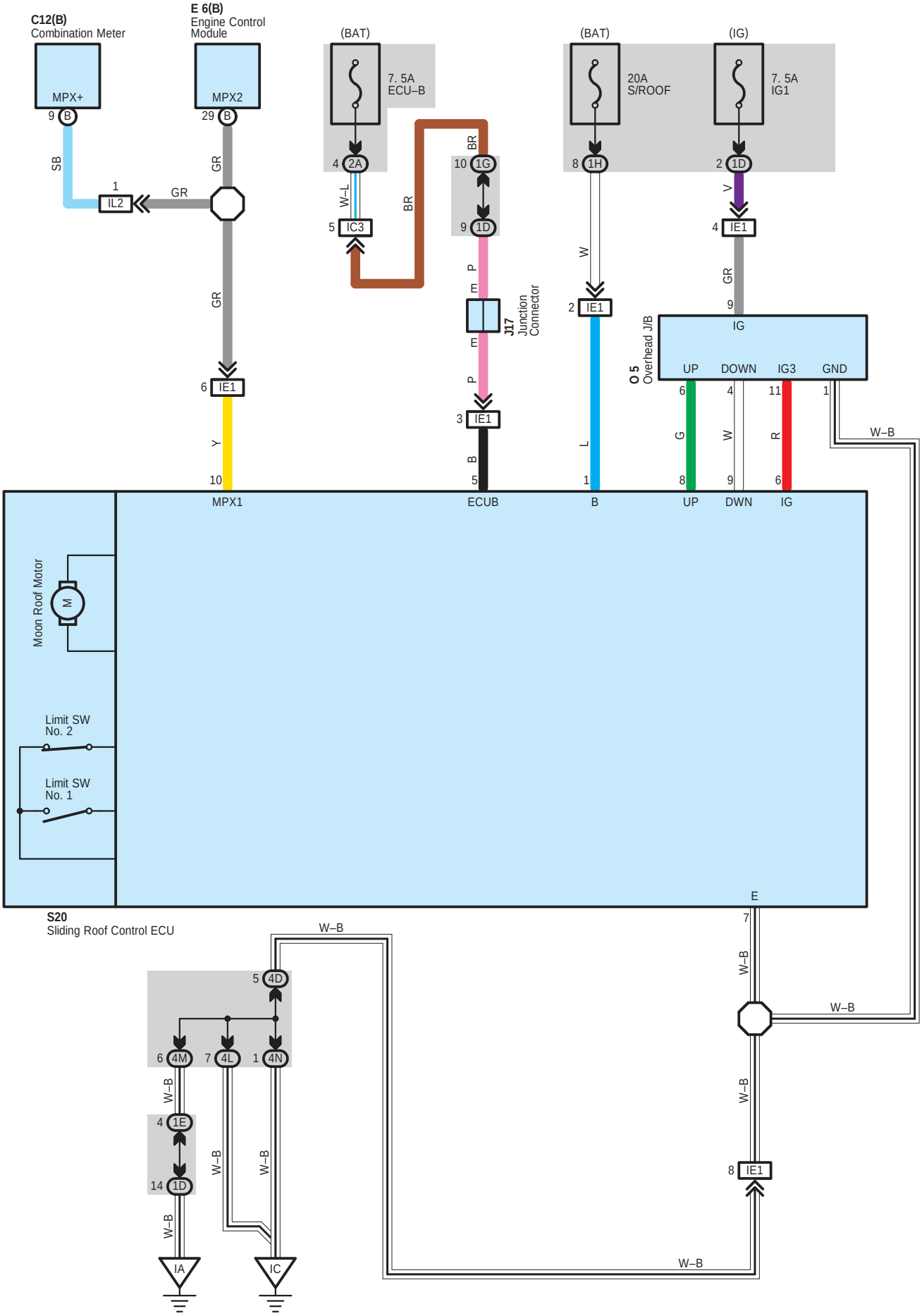
C12(B)
Combination Meter
MPX+
9 B
SB
1
IL2
E 6(B)
Engine Control Module
MPX2
29 B
GR
GR
GR
6 IE1
Y
10
MPX1
(BAT)
7. 5A
ECU–B
4 2A
W–L
5 IC3
BR
BR
10 1G
9 1D
P
E
J17
Junction Connector
E
P
3 IE1
B
5
ECUB
(BAT)
20A
S/ROOF
8 1H
W
2 IE1
L
1
B
(IG)
7. 5A
IG1
2 1D
V
4 IE1
GR
9
IG
O 5
Overhead J/B
UP
DOWN
IG3
GND
6
4
11
1
G
W
R
W–B
8
9
6
UP
DWN
IG
Moon Roof Motor
M
Limit SW
No. 2
Limit SW
No. 1
S20
Sliding Roof Control ECU
E
7
W–B
W–B
W–B
W–B
5 4D
6 4M
7 4L
1 4N
W–B
4 1E
14 1D
W–B
W–B
W–B
8 IE1
IA
IC

System Outline

The moon roof can be operated when the ignition SW is turned to ON position.

1. Slide Open Operation

The moon roof fully opens automatically by pressing the SLIDE OPEN button of the overhead J/B once. If the sliding roof control switch is pressed again when the moon roof is operating, the movement of the moon roof stops.
The operation of SLIDE OPEN is not worked when the moon roof at TILT UP position.

2. Slide Close Operation

If you keep pressing the TILT UP button of the overahead J/B when the moon roof is open, the moon roof closes half and stops the operation once. If you keep pressing the TILT UP once again, the moon roof fully closes.

3. Tilt Up Operation

If you press the TILT UP button of the overhead J/B, the moon roof is tilted up. However, the moon roof is not tilted up when it is open

4. Tilt Down Operation

If you press the SLIDE OPEN button when the TILT UP of the overhead J/B is pressed, the moon roof is tilted down.

5. Key Off Moon Roof Operation

When the ignition SW is turned from ON position to OFF or ACC position, the moon roof can be operated within about 40 seconds. However, even if it is within about 40 seconds, the moon roof can not be operated when each of the front doors opens.

○ : Parts Location

Code		See Page	Code	See Page	Code	See Page
C12	B	42	J17	43	S20	45
E6	B	42	O5	44		

⬭ : Junction Block and Wire Harness Connector

Code	See Page	Junction Block and Wire Harness (Connector Location)
1D	29	Cowl Wire and Instrument Panel J/B (Lower Finish Panel)
1E		
1G		
1H		
2A	27	Engine Room Main Wire and Engine Room J/B (Engine Compartment Left)
4D	33	Cowl Wire and Passenger Side J/B (Right Side of Grove Box)
4L	32	
4M		
4N		

▭ : Connector Joining Wire Harness and Wire Harness

Code	See Page	Joining Wire Harness and Wire Harness (Connector Location)
IC3	50	Engine Room Main Wire and Cowl Wire (Left Cowl Side Panel)
IE1	50	Roof Wire and Cowl Wire (Near the Bottom of Left Front Pillar)
IL2	51	Instrument Panel Wire and Cowl Wire (Upper Side of Passenger Side J/B)

▽ : Ground Points

Code	See Page	Ground Points Location
IA	50	Left Cowl Side Panel
IC	50	Right Cowl Side Panel

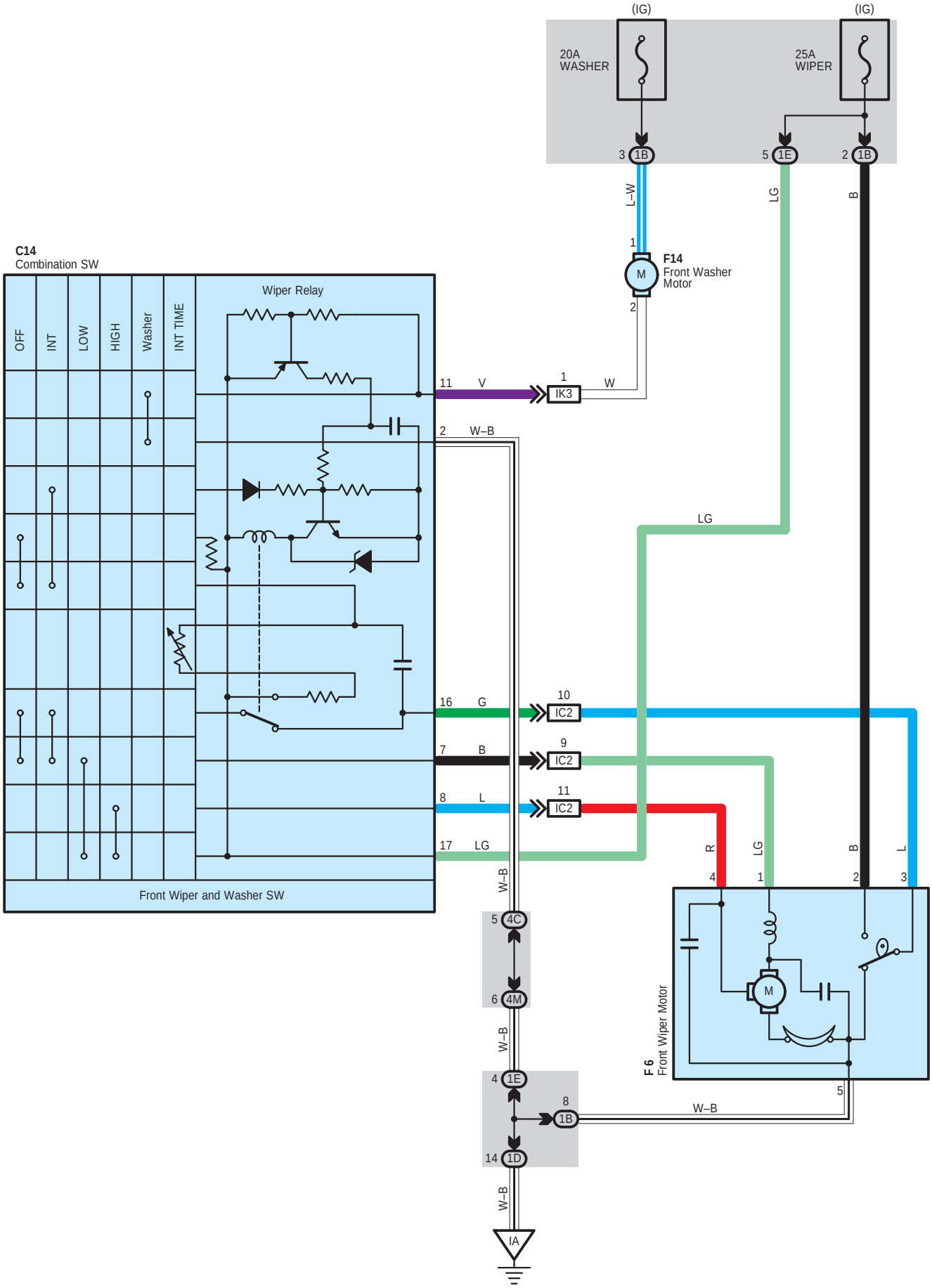
(IG)
(IG)
20A
WASHER
25A
WIPER
3 1B
5 1E
2 1B
L–W
LG
B
1
F14
Front Washer
Motor
M
2
C14
Combination SW
Wiper Relay
OFF
INT
LOW
HIGH
Washer
INT TIME
11 V
1 IK3
W
2 W–B
LG
16 G
10 IC2
7 B
9 IC2
8 L
11 IC2
17 LG
R
LG
B
L
4
1
2
3
W–B
5 4C
6 4M
W–B
4 1E
8 1B
14 1D
W–B
IA
F6
Front Wiper Motor
M
5
W–B
Front Wiper and Washer SW

System Outline

With the ignition SW turned on, the current flows to TERMINAL 17 of the front wiper and washer SW, TERMINAL 2 of the front wiper motor through the WIPER fuse, the current flows to TERMINAL 1 of the washer motor through WASHER fuse.

1. Low Speed Position

With the wiper SW turned to LOW position, the current flows through TERMINAL 17 of the front wiper and washer SW to TERMINAL 7 to TERMINAL 1 of the front wiper motor to TERMINAL 5 to GROUND and causes the wiper motor to run at low speed.

2. High Speed Position

With the wiper SW turned to HIGH position, the current flows through TERMINAL 17 of the front wiper and washer SW to TERMINAL 8 to TERMINAL 4 of the front wiper motor to TERMINAL 5 to GROUND and causes the wiper motor to run at high speed.

3. INT Position

With the wiper SW turned to INT position, the relay operates and the current which is connected by relay function flows through TERMINAL 17 of the front wiper and washer SW to TERMINAL 2 to GROUND. This flow of current operates the intermittent circuit and the current flows through TERMINAL 17 of the front wiper and washer SW to TERMINAL 7 to TERMINAL 1 of the front wiper motor to TERMINAL 5 to GROUND and the wiper functions.
The intermittent operation is controlled by a condenser's charged and discharged function installed in the relay and the intermittent time is controlled by a time control SW to charge the charging time of condenser.

4. Washer Continuous Operation

With the washer SW pulled to on, the current flows through TERMINAL 1 of the washer motor to TERMINAL 2 to TERMINAL 11 of the front wiper and washer SW to TERMINAL 2 to GROUND and causes the washer motor to run and the window washer to jet. This causes the current to flow to washer continuous operation circuit in TERMINAL 17 of the front wiper and washer SW to TERMINAL 7 to TERMINAL 1 of the front wiper motor to TERMINAL 5 to GROUND and the wiper functions.

: Parts Location

Code	See Page	Code	See Page	Code	See Page
C14	42	F6	40 (2AZ–FE)	F14	40 (2AZ–FE)
F6	38 (3MZ–FE)	F14	38 (3MZ–FE)		

: Junction Block and Wire Harness Connector

Code	See Page	Junction Block and Wire Harness (Connector Location)
1B	29	Engine Room Main Wire and Instrument Panel J/B (Lower Finish Panel)
1D	29	Cowl Wire and Instrument Panel J/B (Lower Finish Panel)
1E		
4C	33	Cowl Wire and Passenger Side J/B (Right Side of Grove Box)
4M	32	

: Connector Joining Wire Harness and Wire Harness

Code	See Page	Joining Wire Harness and Wire Harness (Connector Location)
IC2	50	Engine Room Main Wire and Cowl Wire (Left Cowl Side Panel)
IK3	51	Engine Room Main Wire and Cowl Wire (Right Cowl Side Panel)

: Ground Points

Code	See Page	Ground Points Location
IA	50	Left Cowl Side Panel

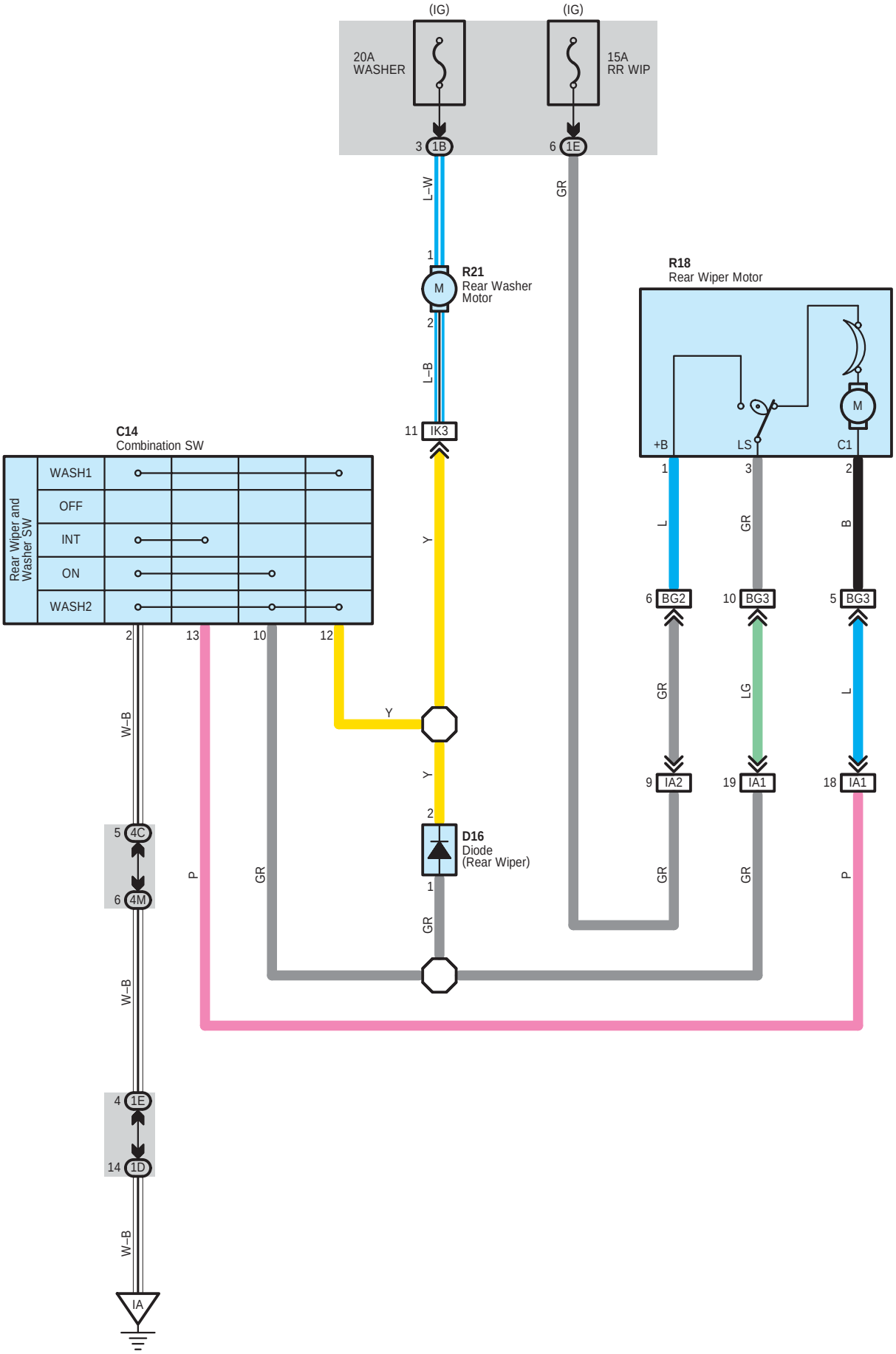
(IG)
(IG)
20A
WASHER
15A
RR WIP
3 1B
6 1E
L–W
GR
1
R21
Rear Washer
Motor
2
L–B
11 IK3
R18
Rear Wiper Motor
+B
LS
C1
M
C14
Combination SW
Rear Wiper and Washer SW
WASH1
OFF
INT
ON
WASH2
2
13
10
12
Y
Y
Y
2
D16
Diode
(Rear Wiper)
1
GR
1
3
2
L
GR
B
6 BG2
10 BG3
5 BG3
GR
LG
L
9 IA2
19 IA1
18 IA1
GR
GR
P
P
GR
W–B
5 4C
6 4M
W–B
4 1E
14 1D
W–B
IA

: Parts Location

Code	See Page	Code	See Page	Code	See Page
C14	42	R18	45	R21	41 (2AZ–FE)
D16	42	R21	39 (3MZ–FE)		

: Junction Block and Wire Harness Connector

Code	See Page	Junction Block and Wire Harness (Connector Location)
1B	29	Engine Room Main Wire and Instrument Panel J/B (Lower Finish Panel)
1D	29	Cowl Wire and Instrument Panel J/B (Lower Finish Panel)
1E		
4C	33	Cowl Wire and Passenger Side J/B (Right Side of Grove Box)
4M	32	

: Connector Joining Wire Harness and Wire Harness

Code	See Page	Joining Wire Harness and Wire Harness (Connector Location)
IA1	50	Cowl Wire and Floor No.2 Wire (Left Kick Panel)
IA2		
IK3	51	Engine Room Main Wire and Cowl Wire (Right Cowl Side Panel)
BG2	52	Back Door No.1 Wire and Floor No.2 Wire (Rear Left of the Roof)
BG3		

: Ground Points

Code	See Page	Ground Points Location
IA	50	Left Cowl Side Panel

Key Reminder and Seat Belt Warning

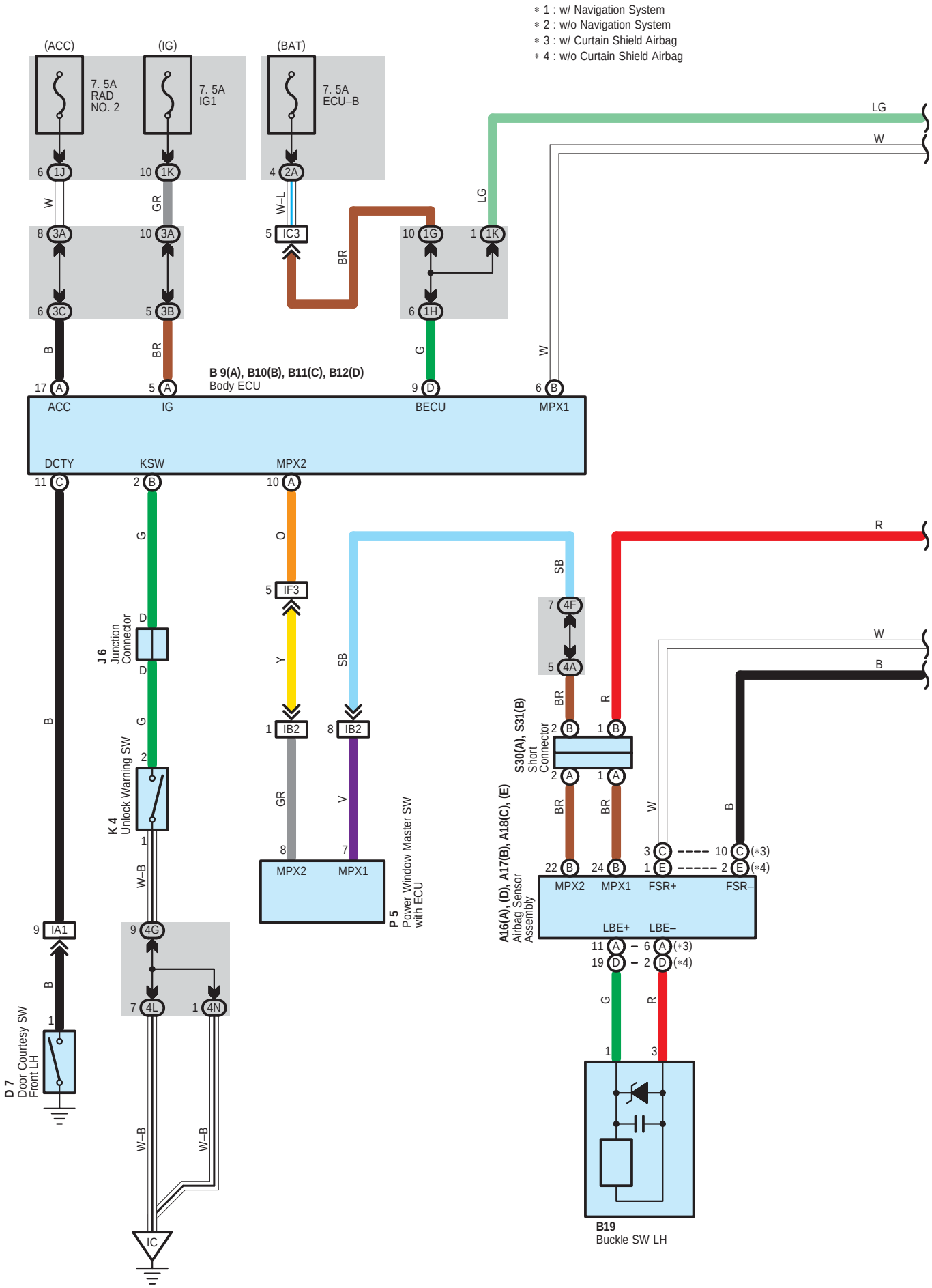

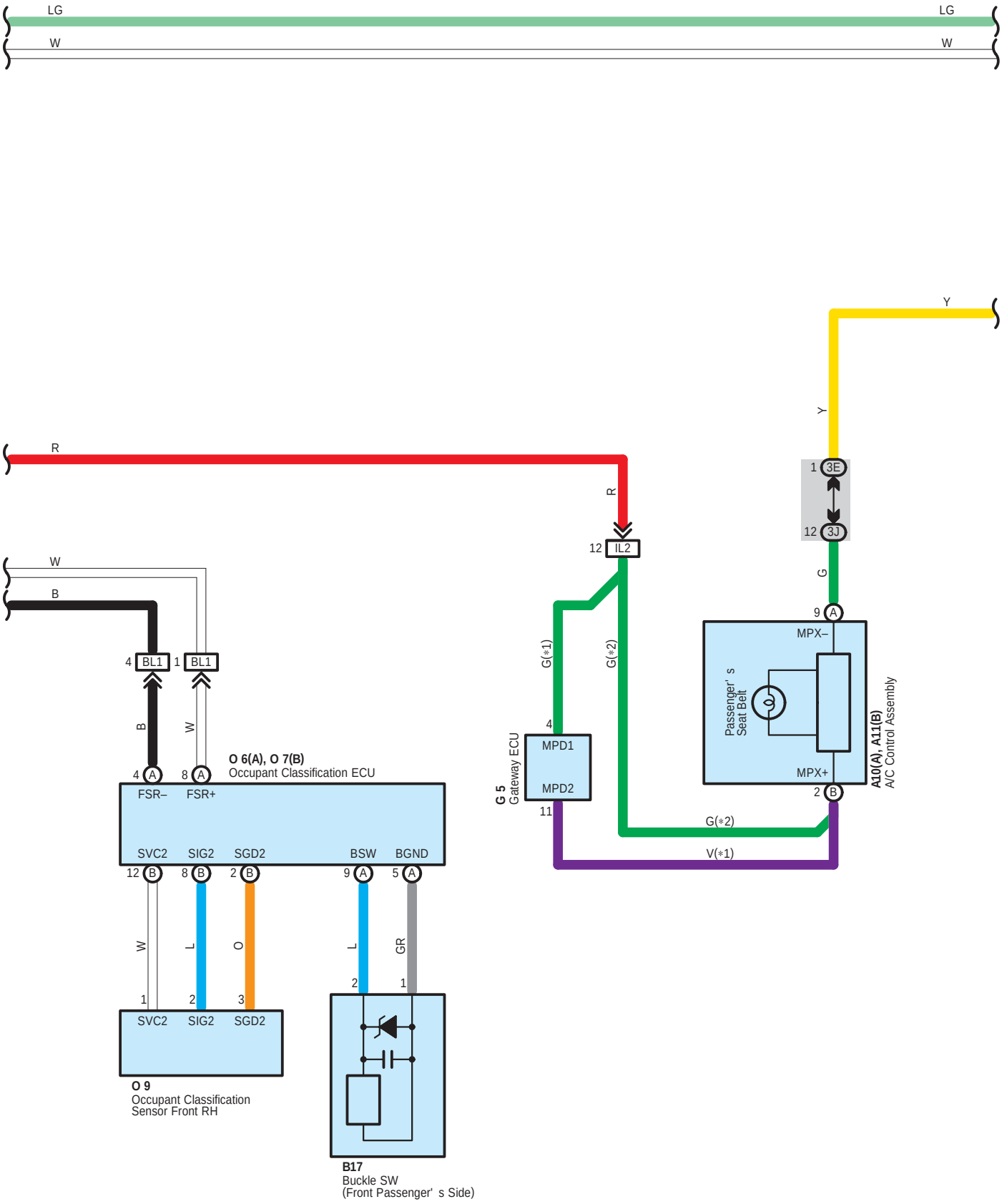
LG
W
LG
W
R
W
B
Y
Y
R
12 IL2
1 3E
12 3J
G
9 A
MPX–
MPX+
2 B
A10(A), A11(B)
A/C Control Assembly
Passenger' s Seat Belt
4 BL1
1 BL1
B
W
4 A
8 A
O 6(A), O 7(B)
Occupant Classification ECU
FSR–
FSR+
SVC2
SIG2
SGD2
BSW
BGND
12 B
8 B
2 B
9 A
5 A
W
L
O
L
GR
1
2
3
2
1
SVC2
SIG2
SGD2
O 9
Occupant Classification
Sensor Front RH
B17
Buckle SW
(Front Passenger' s Side)
G(*1)
G(*2)
G 5
Gateway ECU
4
MPD1
MPD2
11
G(*2)
V(*1)

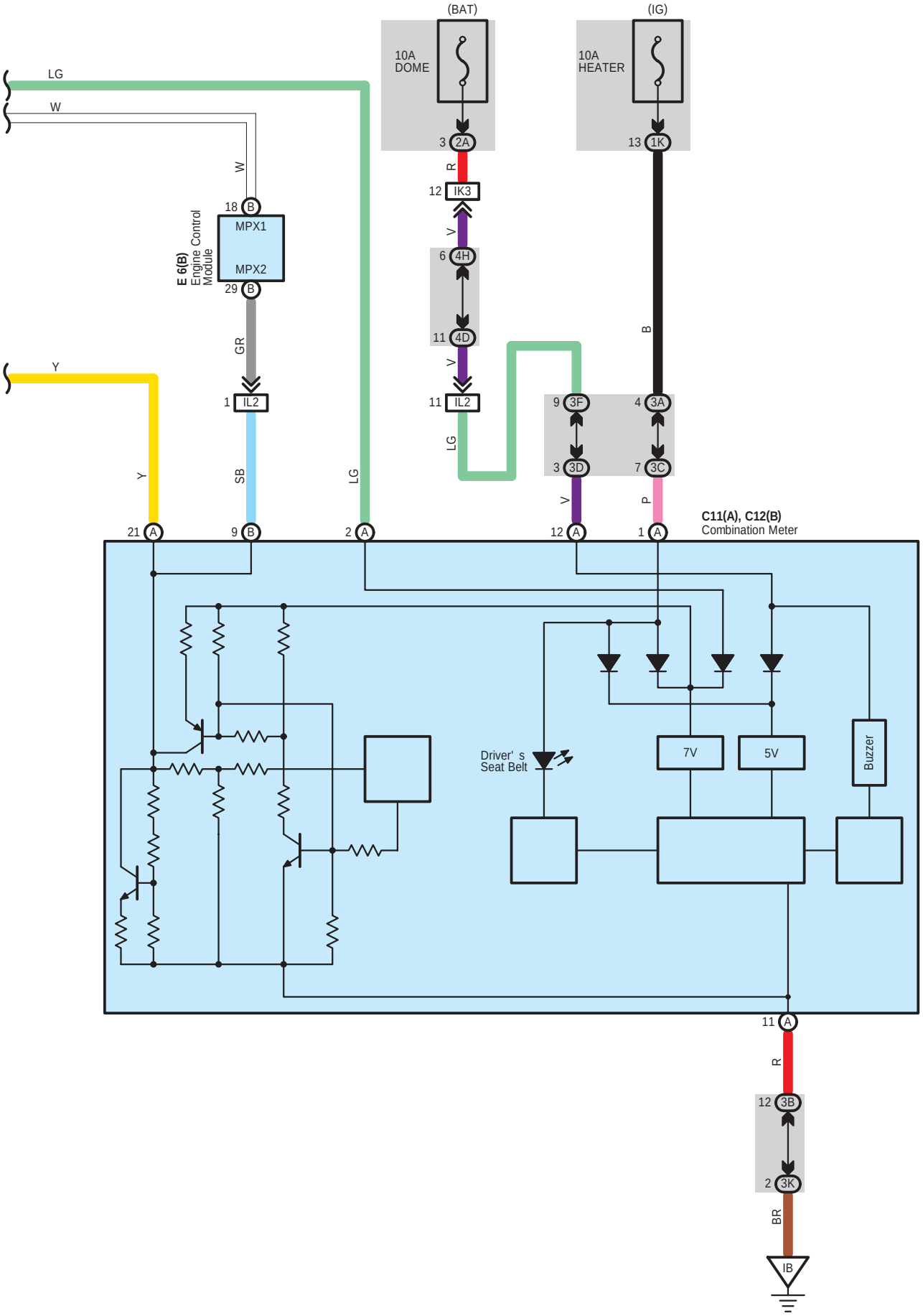
(BAT)
(IG)
10A
DOME
10A
HEATER
LG
W
W
18 B
MPX1
MPX2
29 B
E 6(B)
Engine Control
Module
GR
1 IL2
Y
Y
SB
LG
21 A
9 B
2 A
3 2A
R
12 IK3
V
6 4H
11 4D
V
11 IL2
LG
13 1K
B
9 3F
3 3D
4 3A
7 3C
V
P
12 A
1 A
C11(A), C12(B)
Combination Meter
Driver' s
Seat Belt
7V
5V
Buzzer
11 A
R
12 3B
2 3K
BR
IB

System Outline

1. Seat Belt Warning System

When the ignition SW is turned to the ON position, the signal is input to the body ECU. At this time, to judge whether or not the driver fastens the seat belt, the signal from the buckle SW LH is input to TERMINAL (A) 10 of the body ECU via multiplex commnunication system (Bean bus). If the driver does not fasten the seat belt, the seat belt warning light in the combination meter flashes and the alarm buzzer goes on, in response to the communication control of the body ECU etc.
Additionally, the sensor (Inside of buckle SW (Front passenger's side)) installed on the front passenger seat detects the passenger and determines whether or not the passenger fastens the seat belt.
If the passenger does not fasten the seat belt, the front passenger seat belt warning light is flashed.

2. Key Reminder System

If the driver door is opened with the ignition SW set at the ACC or OFF position and the ignition key remained inserted into the key cylinder (The unlock warning SW is on), the signal from the unlock warning SW is input to TERMINAL (B) 2 of the body ECU and the signal from the door courtesy SW LH is input to TERMINAL (C) 11 of body ECU. As a result, through communication control of the body ECU etc. the buzzer in the combination meter goes on to warn the driver that the ignition key is still inserted.

○ : Parts Location

Code		See Page	Code		See Page	Code		See Page
A10	A	42	B17		46 (*1)	O6	A	46 (*1)
A11	B	42			47 (*2)			47 (*2)
A16	A	42	B19		46 (*1)	O7	B	46 (*1)
	D	42			47 (*2)			47 (*2)
A17	B	42	C11	A	42	O9		46 (*1)
A18	C	42	C12	B	42			47 (*2)
	E	42	D7		44	P5		44
B9	A	42	E6	B	42	S30	A	43
B10	B	42	G5		43	S31	B	43
B11	C	42	J6		43			
B12	D	42	K4		43			

: Junction Block and Wire Harness Connector

Code	See Page	Junction Block and Wire Harness (Connector Location)
1G	29	Cowl Wire and Instrument Panel J/B (Lower Finish Panel)
1H		
1J	28	Instrument Panel Wire and Instrument Panel J/B (Lower Finish Panel)
1K		
2A	27	Engine Room Main Wire and Engine Room J/B (Engine Compartment Left)
3A	30	Instrument Panel Wire and Center J/B (Behind the Instrument Panel Center)
3B		
3C		
3D		
3E		
3F		
3J	31	
3K		
4A	33	Cowl Wire and Passenger Side J/B (Right Side of Grove Box)
4D		
4F		
4G		
4H		
4L	32	
4N		

* 1 : w/ Power Seat * 2 : w/o Power Seat

Key Reminder and Seat Belt Warning

: Connector Joining Wire Harness and Wire Harness

Code	See Page	Joining Wire Harness and Wire Harness (Connector Location)
IA1	50	Cowl Wire and Floor No.2 Wire (Left Kick Panel)
IB2	50	Front Door LH Wire and Cowl Wire (Left Kick Panel)
IC3	50	Engine Room Main Wire and Cowl Wire (Left Cowl Side Panel)
IF3	50	Instrument Panel Wire and Cowl Wire (Right Side of Instrument Panel J/B)
IK3	51	Engine Room Main Wire and Cowl Wire (Right Cowl Side Panel)
IL2	51	Instrument Panel Wire and Cowl Wire (Upper Side of Passenger Side J/B)
BL1	54 (*1)	Floor Wire and Front Seat RH Wire (Under the Front Passenger's Seat)
	55 (*2)	

: Ground Points

Code	See Page	Ground Points Location
IB	50	Right Instrument Panel Brace
IC	50	Right Cowl Side Panel

* 1 : w/ Power Seat * 2 : w/o Power Seat

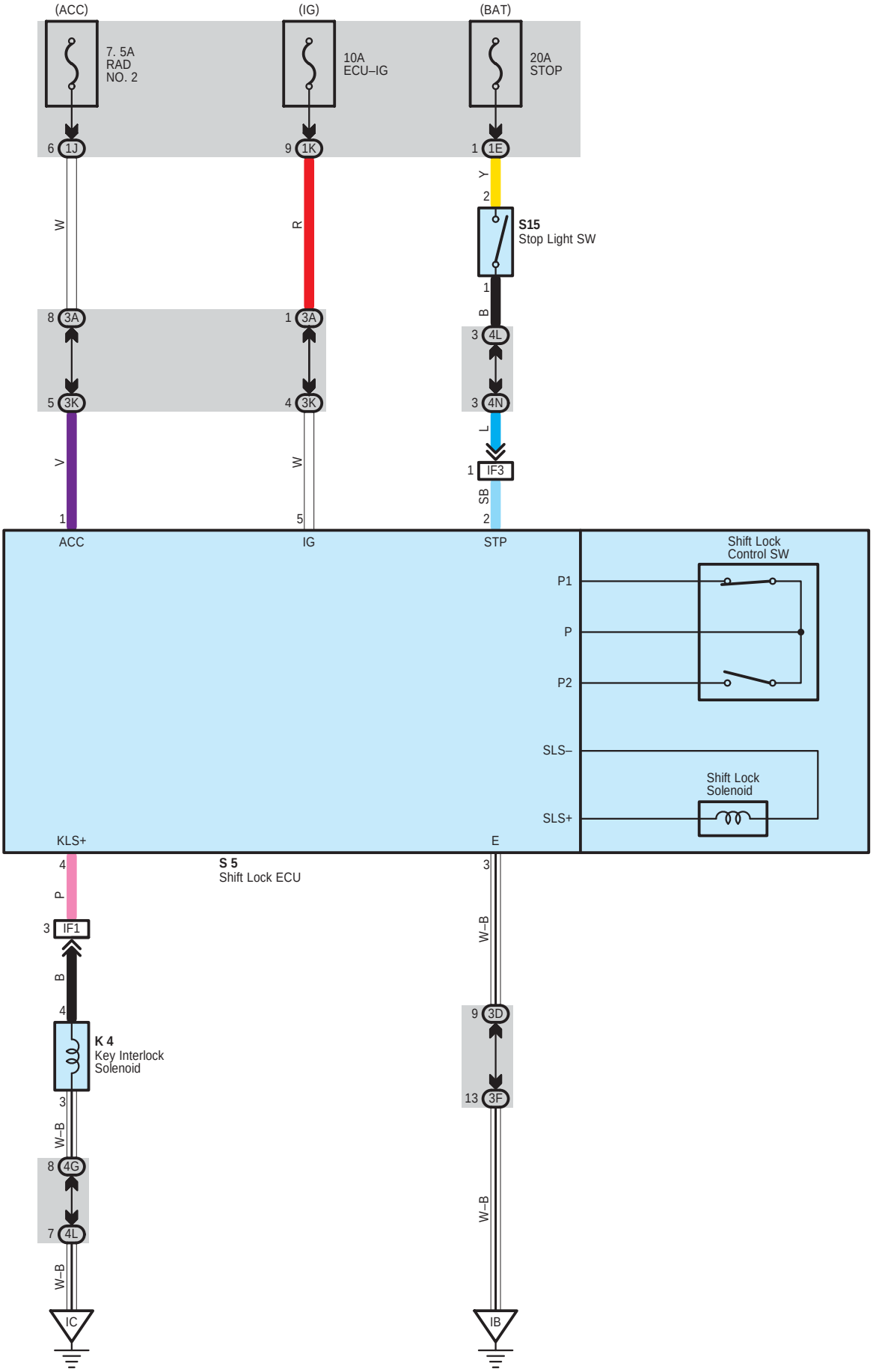
(ACC)
(IG)
(BAT)
7. 5A
RAD
NO. 2
10A
ECU–IG
20A
STOP
6 1J
9 1K
1 1E
W
R
Y
2
S15
Stop Light SW
1
B
8 3A
1 3A
3 4L
5 3K
4 3K
3 4N
V
W
L
1 IF3
SB
1
5
2
ACC
IG
STP
Shift Lock
Control SW
P1
P
P2
SLS–
Shift Lock
Solenoid
SLS+
KLS+
E
S 5
Shift Lock ECU
4
P
3 IF1
B
4
K 4
Key Interlock
Solenoid
3
W–B
8 4G
7 4L
W–B
IC
3
W–B
9 3D
13 3F
W–B
IB

System Outline

When the ignition SW is turned to ACC position, the current from the RAD NO.2 fuse flows to TERMINAL 1 of the shift lock ECU. When the ignition SW is turned to ON position, the current from the ECU–IG fuse flows to TERMINAL 5 of the ECU.

1. Shift Lock Mechanism

With the ignition SW on, when a signal that the brake pedal is depressed (Stop light SW on) and a signal that the shift lever is put in P position (Continuity between P1 and P of the shift lock control SW) is input to the ECU, the ECU activates and the current flows from TERMINAL 5 of the ECU to TERMINAL SLS+ of the shift lock solenoid to solenoid to TERMINAL SLS– to TERMINAL 3 of the ECU to GROUND. This causes the shift lock solenoid to turn on (Lock plate disengages) and the shift lever can be shifted into other position than the P position

2. Key Inter Lock Mechanism

With the ignition SW ON or ACC position, when the shift lever is put in P position (No continuity between P2 and P of shift lock control SW), the current flowing from TERMINAL 4 of the ECU to the key interlock solenoid is cut off. This causes the key interlock solenoid to turn off (Lock plate disengages from LOCK position) and the ignition key can be turned from ACC to LOCK position.

: Parts Location

Code	See Page	Code	See Page	Code	See Page
K4	43	S5	43	S15	43

: Junction Block and Wire Harness Connector

Code	See Page	Junction Block and Wire Harness (Connector Location)
1E	29	Cowl Wire and Instrument Panel J/B (Lower Finish Panel)
1J	28	Instrument Panel Wire and Instrument Panel J/B (Lower Finish Panel)
1K		
3A	30	Instrument Panel Wire and Center J/B (Behind the Instrument Panel Center)
3D		
3F		
3K	31	
4G	33	Cowl Wire and Passenger Side J/B (Right Side of Grove Box)
4L	32	
4N		

: Connector Joining Wire Harness and Wire Harness

Code	See Page	Joining Wire Harness and Wire Harness (Connector Location)
IF1	50	Instrument Panel Wire and Cowl Wire (Right Side of Instrument Panel J/B)
IF3		

: Ground Points

Code	See Page	Ground Points Location
IB	50	Right Instrument Panel Brace
IC	50	Right Cowl Side Panel

Power Seat for Driver's Seat

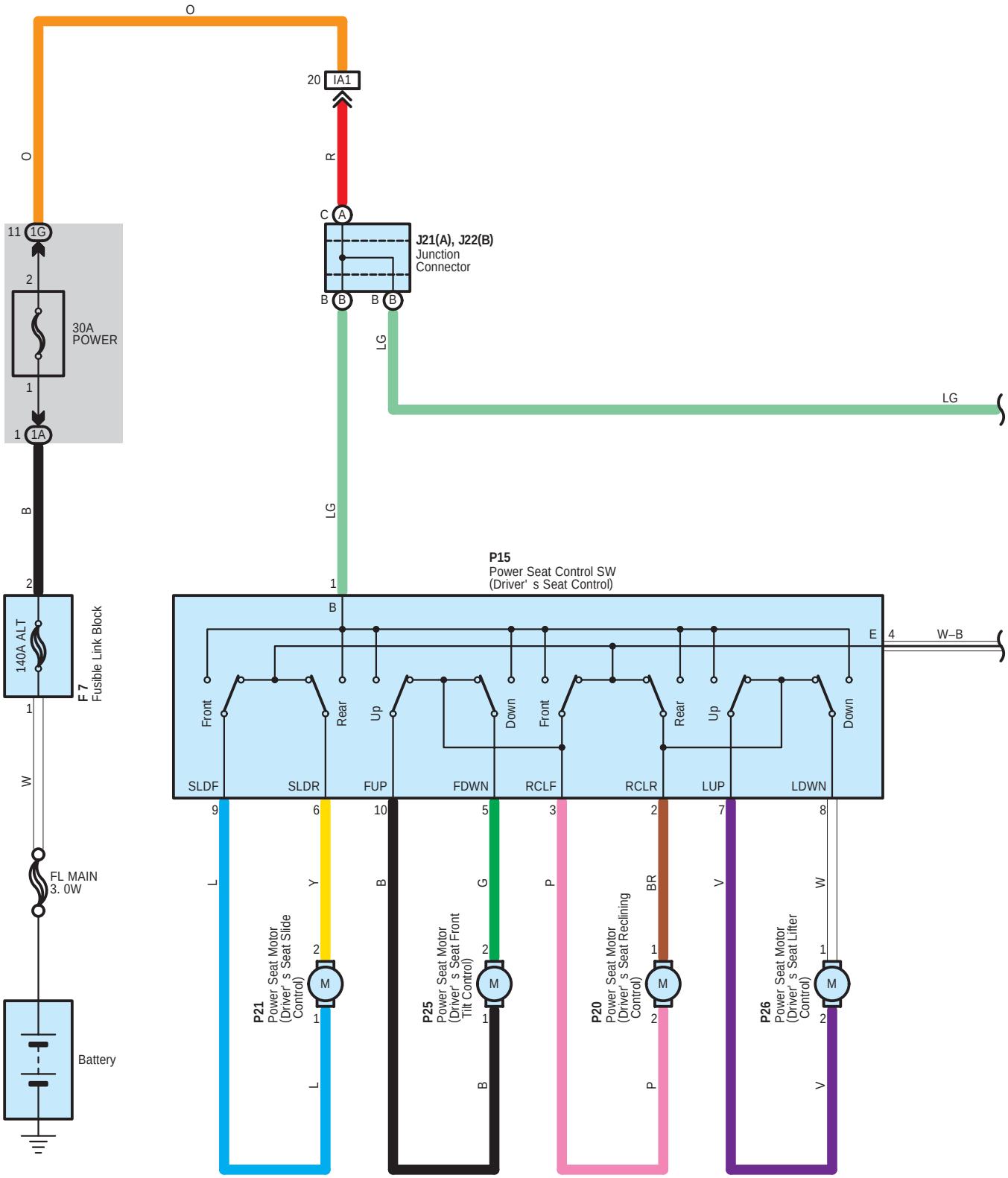

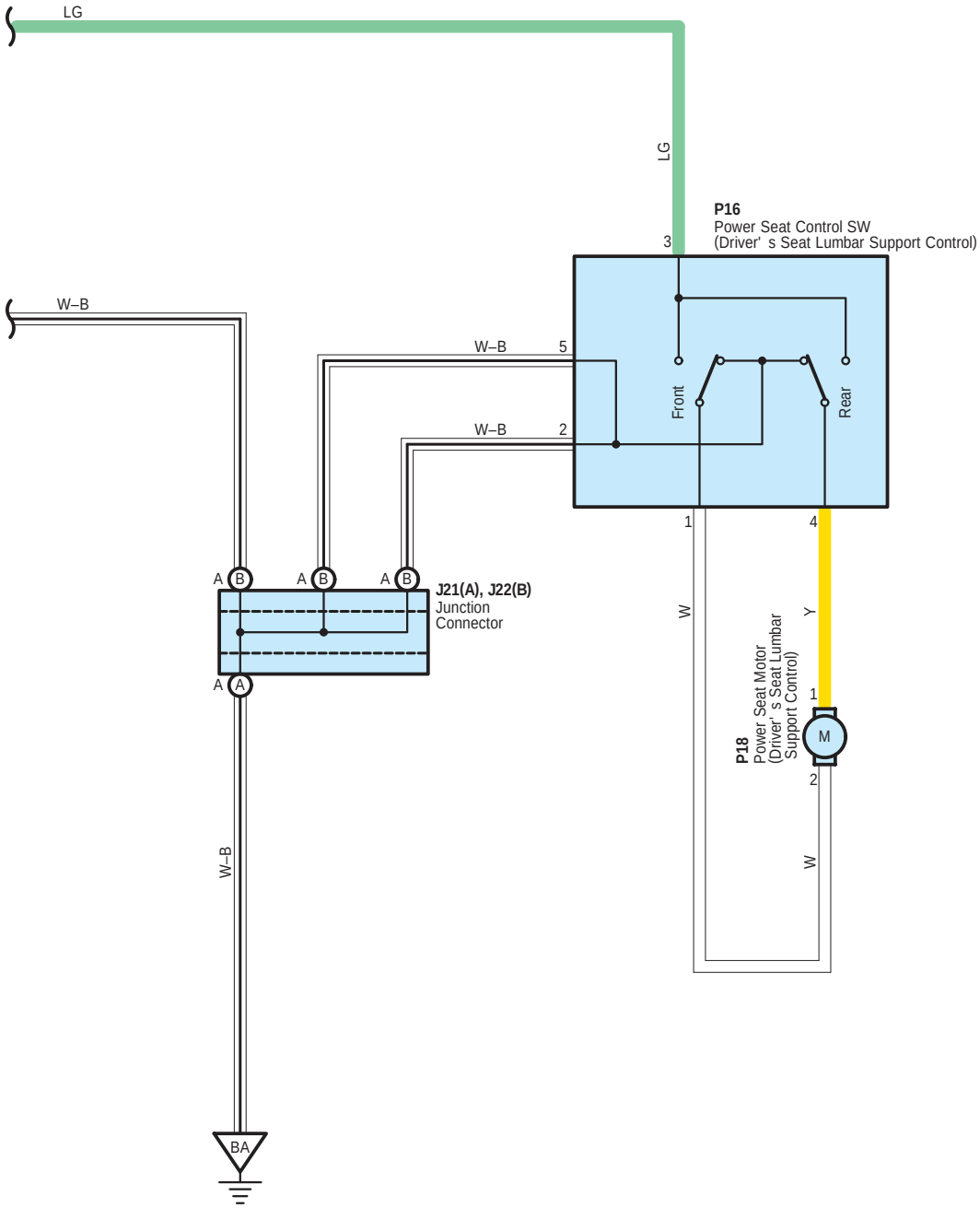
LG
LG
P16
Power Seat Control SW
(Driver' s Seat Lumbar Support Control)
3
W–B
W–B
5
W–B
2
Front
Rear
1
4
A B
A B
A B
J21(A), J22(B)
Junction
Connector
A A
W
Y
P18
Power Seat Motor
(Driver' s Seat Lumbar
Support Control)
M
1
2
W
W–B
BA

Power Seat for Driver's Seat

: Parts Location

Code		See Page	Code	See Page	Code	See Page
F7		38 (3MZ–FE)	P15	46 (*1)	P21	46 (*1)
		40 (2AZ–FE)	P16	46 (*1)	P25	46 (*1)
J21	A	46 (*1)	P18	46 (*1)	P26	46 (*1)
J22	B	46 (*1)	P20	46 (*1)		

: Junction Block and Wire Harness Connector

Code	See Page	Junction Block and Wire Harness (Connector Location)
1A	29	Engine Room Main Wire and Instrument Panel J/B (Lower Finish Panel)
1G	29	Cowl Wire and Instrument Panel J/B (Lower Finish Panel)

: Connector Joining Wire Harness and Wire Harness

Code	See Page	Joining Wire Harness and Wire Harness (Connector Location)
IA1	50	Cowl Wire and Floor No.2 Wire (Left Kick Panel)

: Ground Points

Code	See Page	Ground Points Location
BA	52	Left Center Pillar

* 1 : w/ Power Seat * 2 : w/o Power Seat

Power Seat for Front Passenger's Seat

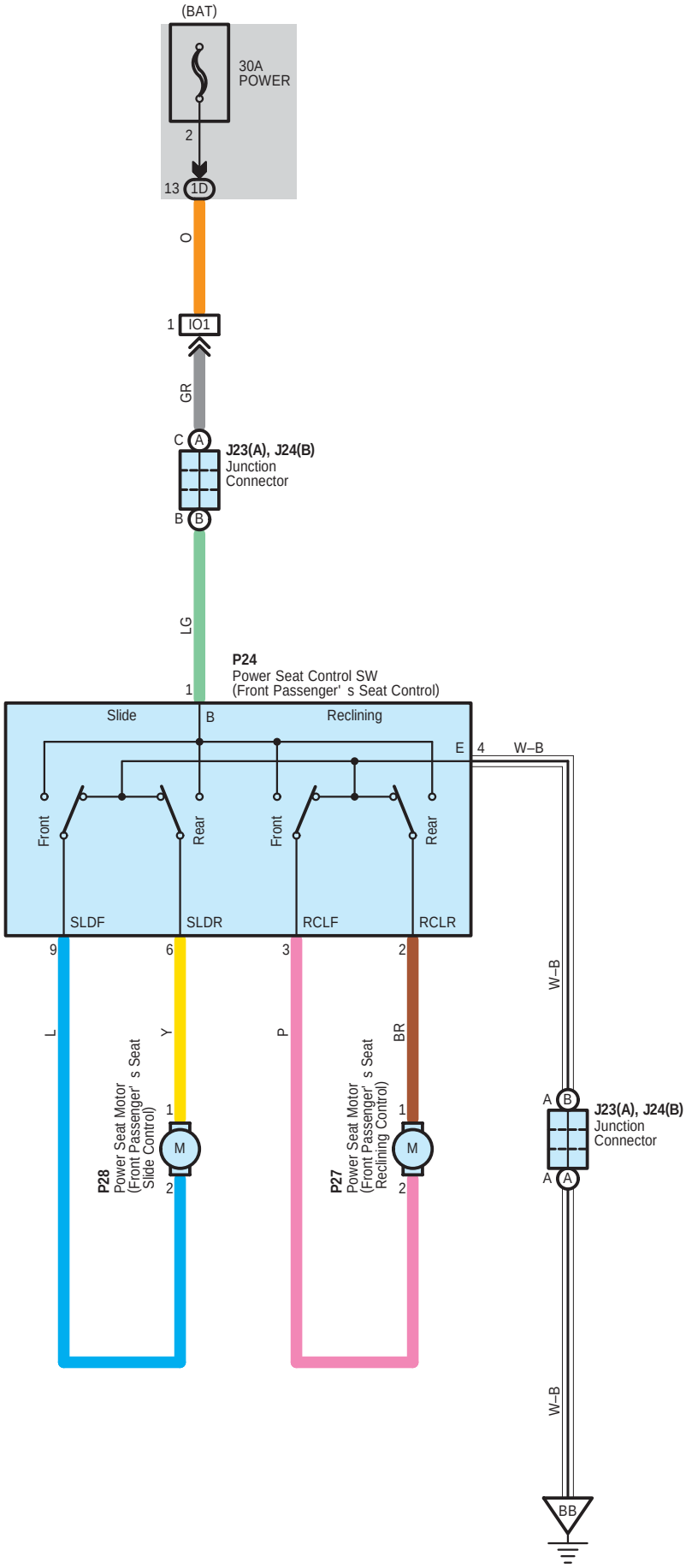

: Parts Location

Code		See Page	Code	See Page	Code	See Page
J23	A	46 (*1)	P24	46 (*1)	P28	46 (*1)
J24	B	46 (*1)	P27	46 (*1)		

: Junction Block and Wire Harness Connector

Code	See Page	Junction Block and Wire Harness (Connector Location)
1D	29	Cowl Wire and Instrument Panel J/B (Lower Finish Panel)

: Connector Joining Wire Harness and Wire Harness

Code	See Page	Joining Wire Harness and Wire Harness (Connector Location)
IO1	51	Cowl Wire and Floor Wire (Right Kick Panel)

: Ground Points

Code	See Page	Ground Points Location
BB	52	Right Center Pillar

* 1 : w/ Power Seat * 2 : w/o Power Seat

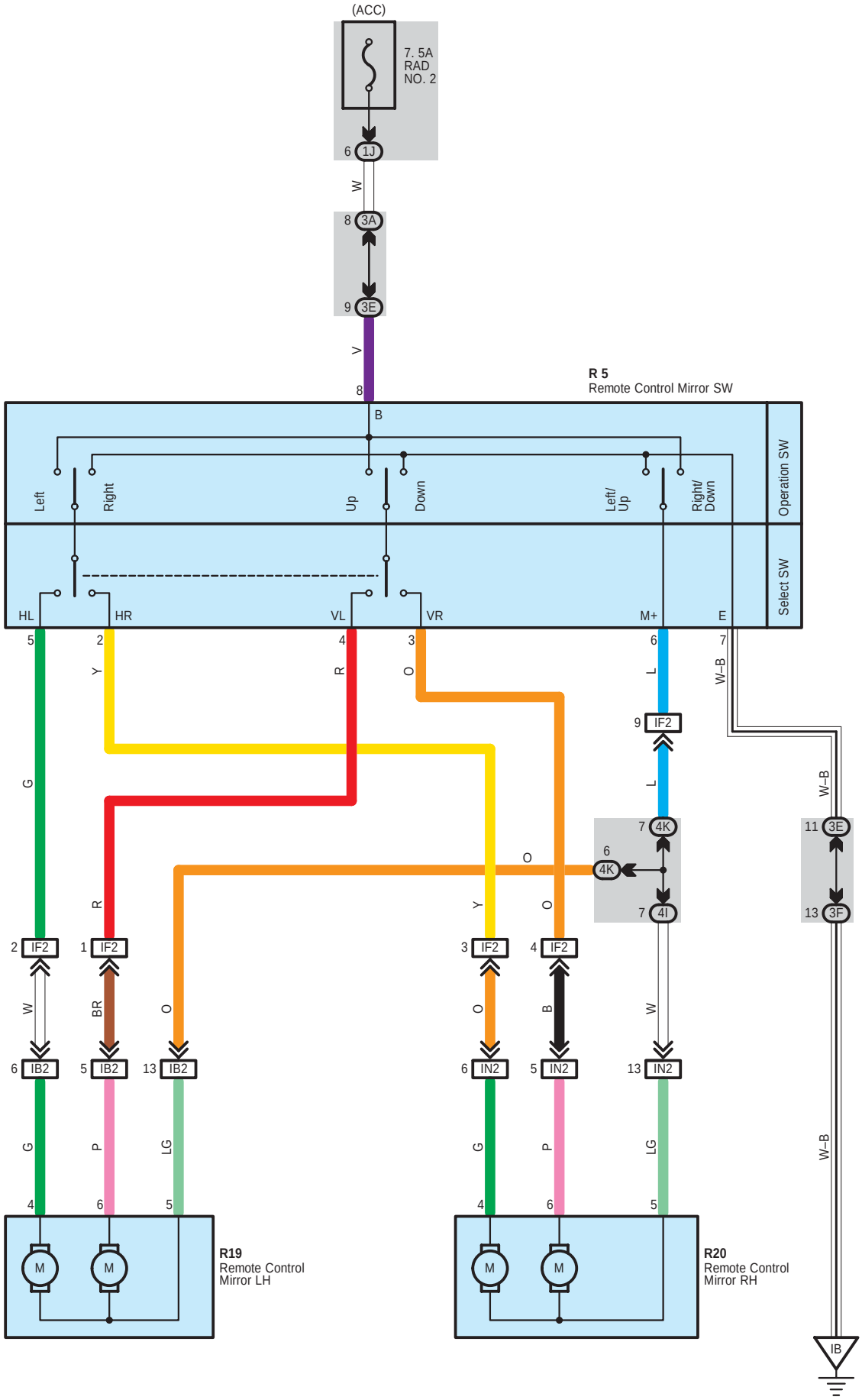
(ACC)
7. 5A
RAD
NO. 2
6 1J
W
8 3A
9 3E
V
8
R 5
Remote Control Mirror SW
B
Left
Right
Up
Down
Left/
Up
Right/
Down
Operation SW
Select SW
HL
HR
VL
VR
M+
E
5
2
4
3
6
7
Y
R
O
L
W–B
9 IF2
L
7 4K
6 4K
7 4I
O
11 3E
13 3F
W–B
G
R
Y
O
2 IF2
1 IF2
3 IF2
4 IF2
W
BR
O
B
W
6 IB2
5 IB2
13 IB2
6 IN2
5 IN2
13 IN2
G
P
LG
G
P
LG
4
6
5
4
6
5
M
M
R19
Remote Control
Mirror LH
M
M
R20
Remote Control
Mirror RH
W–B
IB

: Parts Location

Code	See Page	Code	See Page	Code	See Page
R5	43	R19	45	R20	45

: Junction Block and Wire Harness Connector

Code	See Page	Junction Block and Wire Harness (Connector Location)
1J	28	Instrument Panel Wire and Instrument Panel J/B (Lower Finish Panel)
3A	30	Instrument Panel Wire and Center J/B (Behind the Instrument Panel Center)
3E		
3F		
4I	32	Cowl Wire and Passenger Side J/B (Right Side of Grove Box)
4K		

: Connector Joining Wire Harness and Wire Harness

Code	See Page	Joining Wire Harness and Wire Harness (Connector Location)
IB2	50	Front Door LH Wire and Cowl Wire (Left Kick Panel)
IF2	50	Instrument Panel Wire and Cowl Wire (Right Side of Instrument Panel J/B)
IN2	51	Front Door RH Wire and Cowl Wire (Right Kick Panel)

: Ground Points

Code	See Page	Ground Points Location
IB	50	Right Instrument Panel Brace

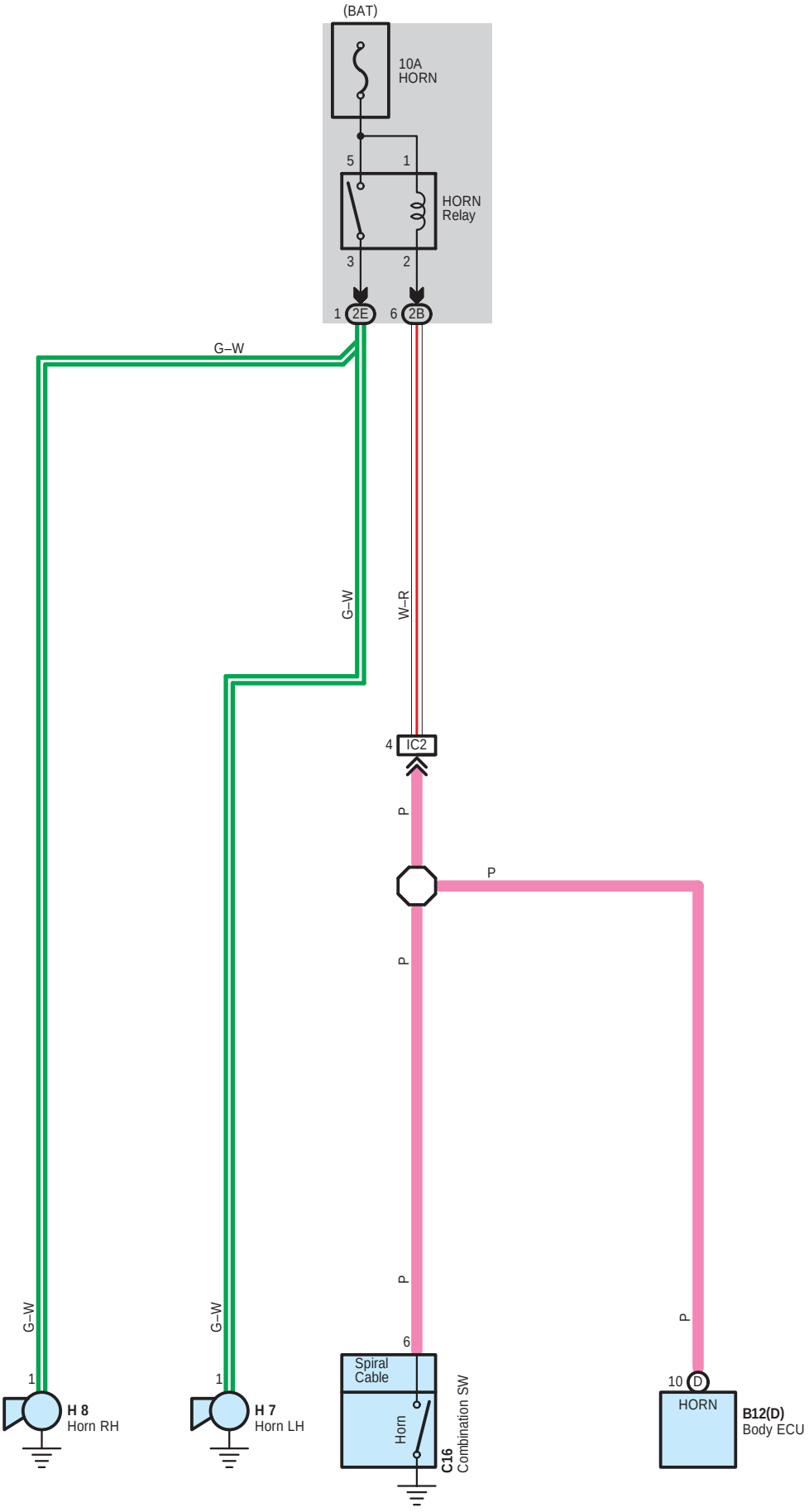
(BAT)
10A
HORN
5
1
HORN
Relay
3
2
1 2E
6 2B
G–W
G–W
W–R
4 IC2
P
P
P
P
P
G–W
G–W
1
1
6
10 D
HORN
H 8
Horn RH
H 7
Horn LH
Spiral
Cable
Horn
C16
Combination SW
B12(D)
Body ECU

○ : Parts Location

Code	See Page	Code	See Page	Code	See Page
B12 D	42	H7	38 (3MZ–FE)	H8	38 (3MZ–FE)
C16	42		40 (2AZ–FE)		40 (2AZ–FE)

: Junction Block and Wire Harness Connector

Code	See Page	Junction Block and Wire Harness (Connector Location)
2B	27	Engine Room Main Wire and Engine Room J/B (Engine Compartment Left)
2E		

: Connector Joining Wire Harness and Wire Harness

Code	See Page	Joining Wire Harness and Wire Harness (Connector Location)
IC2	50	Engine Room Main Wire and Cowl Wire (Left Cowl Side Panel)

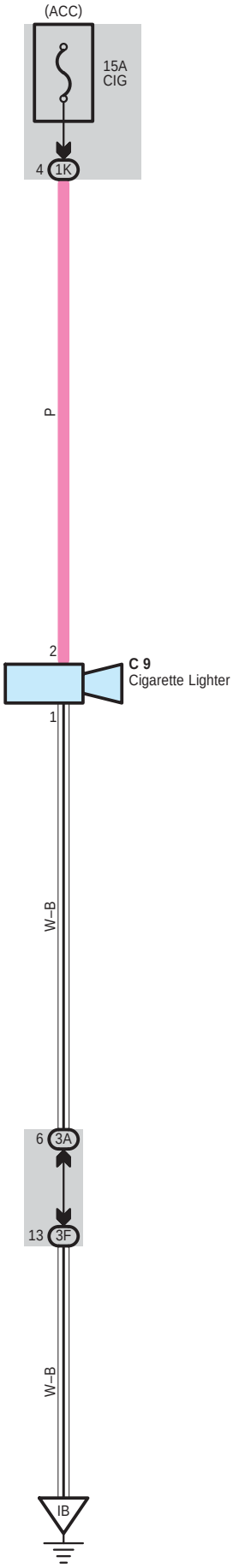
(ACC)
15A
CIG
4
1K
P
2
C 9
Cigarette Lighter
1
W–B
6
3A
13
3F
W–B
IB

○ : **Parts Location**

Code	See Page	Code	See Page	Code	See Page
C9	42				

: **Junction Block and Wire Harness Connector**

Code	See Page	Junction Block and Wire Harness (Connector Location)
1K	28	Instrument Panel Wire and Instrument Panel J/B (Lower Finish Panel)
3A	30	Instrument Panel Wire and Center J/B (Behind the Instrument Panel Center)
3F		

▽ : **Ground Points**

Code	See Page	Ground Points Location
IB	50	Right Instrument Panel Brace

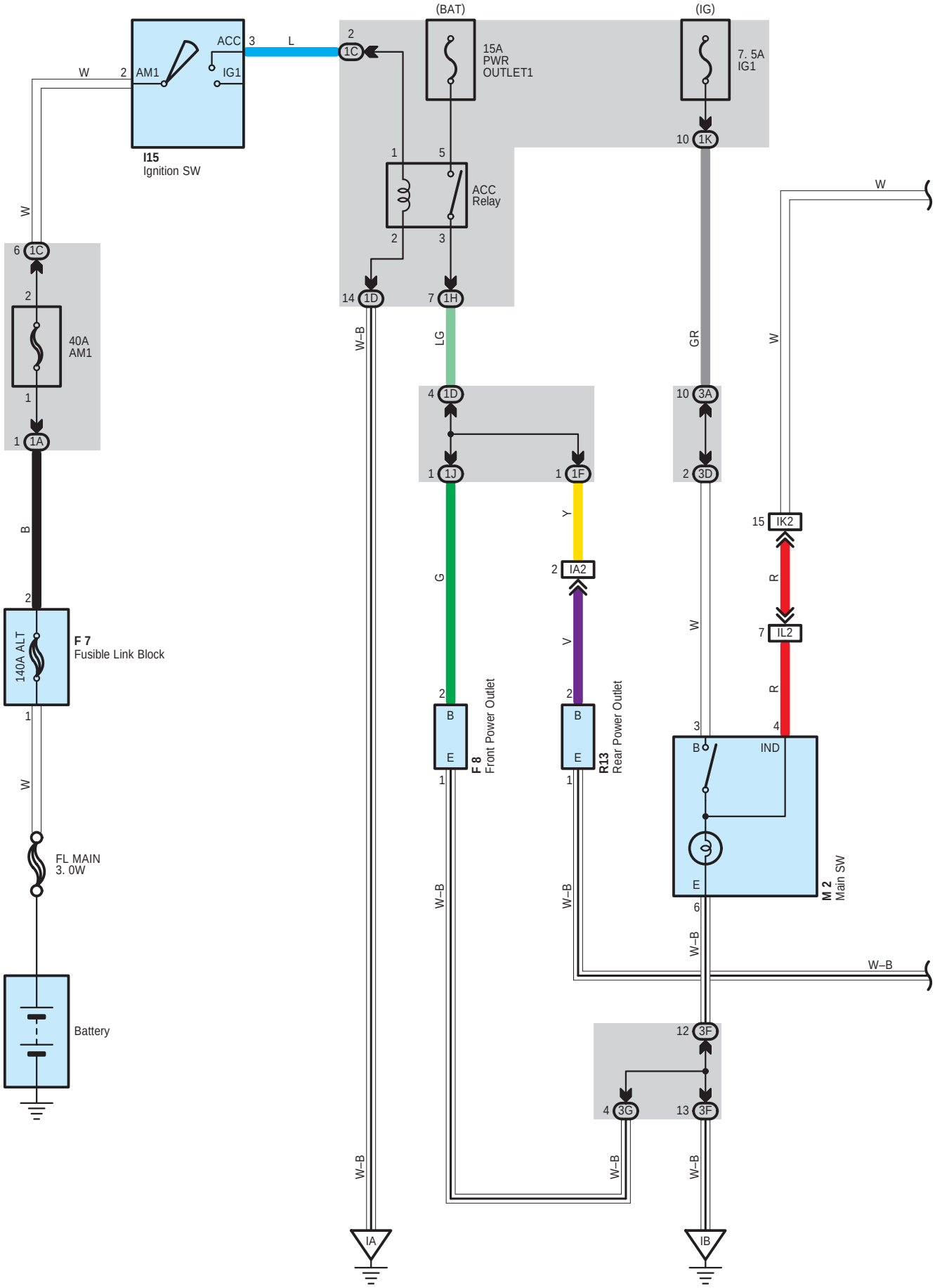
(BAT)
(IG)
ACC
AM1
IG1
I15
Ignition SW
15A
PWR
OUTLET1
7. 5A
IG1
ACC
Relay
40A
AM1
140A ALT
F 7
Fusible Link Block
FL MAIN
3. 0W
Battery
F 8
Front Power Outlet
R13
Rear Power Outlet
M 2
Main SW
IND
W–B
IA
IB

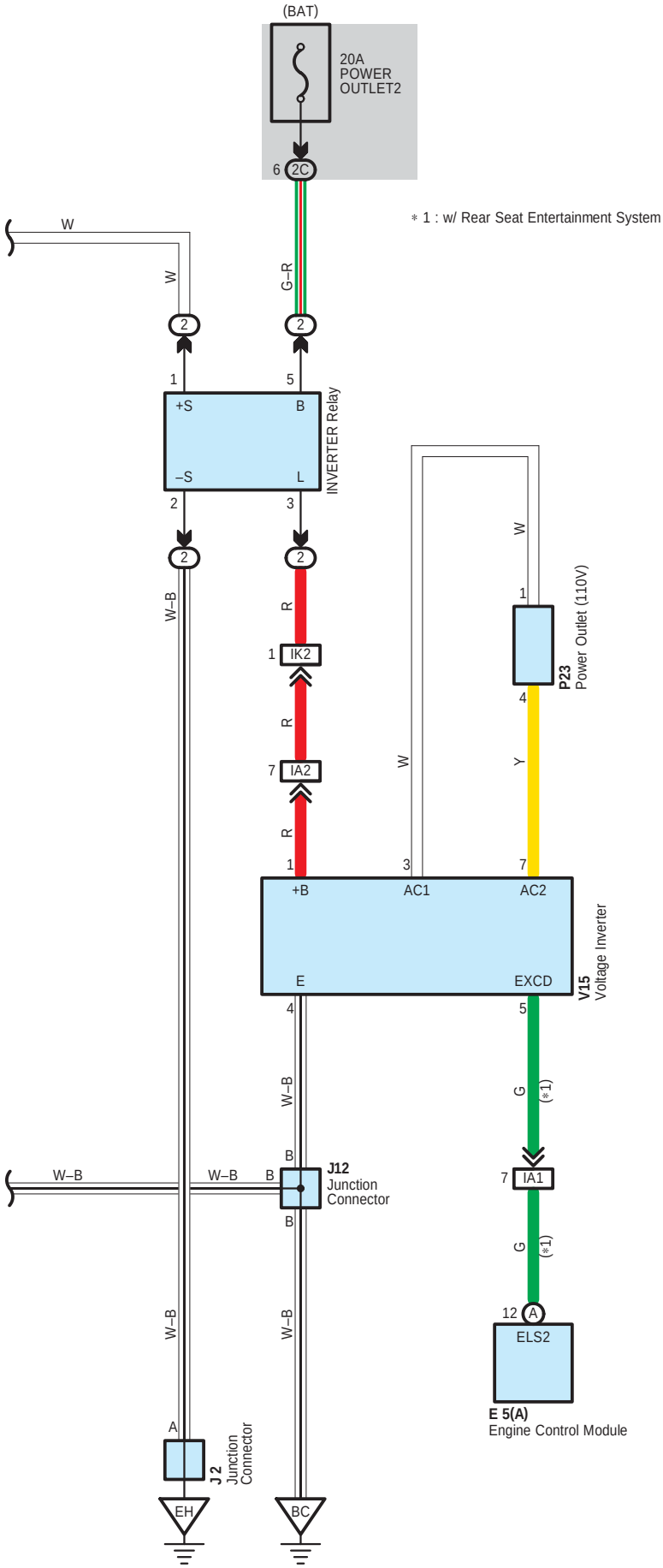
(BAT)
20A
POWER
OUTLET2
6 2C
∗ 1 : w/ Rear Seat Entertainment System
W
W
G–R
2
2
1
5
+S
B
–S
L
INVERTER Relay
2
3
2
2
W–B
R
1 IK2
R
7 IA2
R
1
3
7
+B
AC1
AC2
E
EXCD
V15
Voltage Inverter
W
1
P23
Power Outlet (110V)
4
Y
W
4
5
W–B
G
(∗1)
B
B
W–B
W–B
B
J12
Junction
Connector
B
7 IA1
G
(∗1)
W–B
W–B
12 A
ELS2
E 5(A)
Engine Control Module
A
J2
Junction
Connector
EH
BC

Power Outlet

: Parts Location

Code		See Page	Code	See Page	Code	See Page
E5	A	42	I15	43	M2	43
F7		38 (3MZ–FE)	J2	39 (3MZ–FE)	P23	44
		40 (2AZ–FE)		41 (2AZ–FE)	R13	45
F8		43	J12	44	V15	45

: Relay Blocks

Code	See Page	Relay Blocks (Relay Block Location)
2	22	Engine Room R/B (Engine Compartment Left)

: Junction Block and Wire Harness Connector

Code	See Page	Junction Block and Wire Harness (Connector Location)
1A	29	Engine Room Main Wire and Instrument Panel J/B (Lower Finish Panel)
1C	29	Cowl Wire and Instrument Panel J/B (Lower Finish Panel)
1D		
1F		
1H		
1J	28	Instrument Panel Wire and Instrument Panel J/B (Lower Finish Panel)
1K		
2C	27	Engine Room Main Wire and Engine Room J/B (Engine Compartment Left)
3A	30	Instrument Panel Wire and Center J/B (Behind the Instrument Panel Center)
3D		
3F		
3G	31	

: Connector Joining Wire Harness and Wire Harness

Code	See Page	Joining Wire Harness and Wire Harness (Connector Location)
IA1	50	Cowl Wire and Floor No.2 Wire (Left Kick Panel)
IA2		
IK2	51	Engine Room Main Wire and Cowl Wire (Right Cowl Side Panel)
IL2	51	Instrument Panel Wire and Cowl Wire (Upper Side of Passenger Side J/B)

: Ground Points

Code	See Page	Ground Points Location
EH	48 (3MZ–FE)	Under the Left Headlight
	49 (2AZ–FE)	
IA	50	Left Cowl Side Panel
IB	50	Right Instrument Panel Brace
BC	52	Left Side of Rear Cross Member

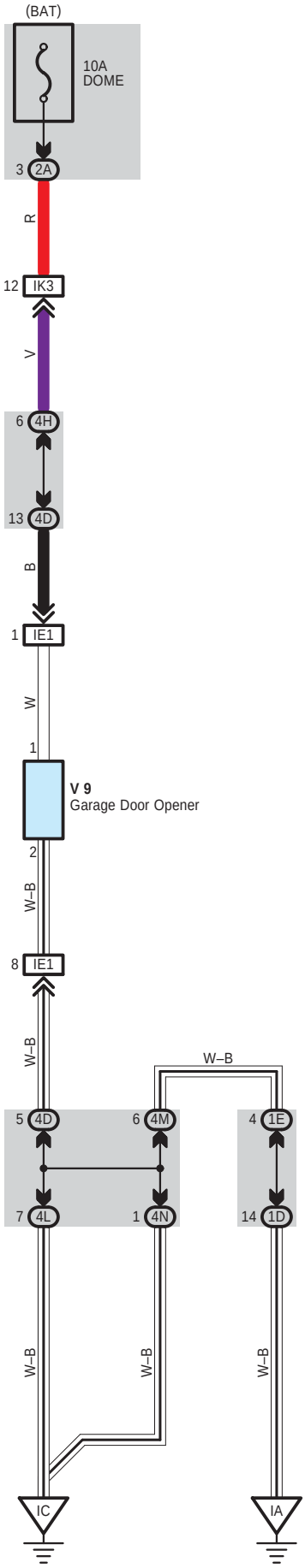
(BAT)
10A
DOME
3 2A
R
12 IK3
V
6 4H
13 4D
B
1 IE1
W
1
V 9
Garage Door Opener
2
W–B
8 IE1
W–B
W–B
5 4D
6 4M
4 1E
7 4L
1 4N
14 1D
W–B
W–B
W–B
IC
IA

: Parts Location

Code	See Page	Code	See Page	Code	See Page
V9	45				

: Junction Block and Wire Harness Connector

Code	See Page	Junction Block and Wire Harness (Connector Location)
1D	29	Cowl Wire and Instrument Panel J/B (Lower Finish Panel)
1E		
2A	27	Engine Room Main Wire and Engine Room J/B (Engine Compartment Left)
4D	33	Cowl Wire and Passenger Side J/B (Right Side of Grove Box)
4H		
4L	32	
4M		
4N		

: Connector Joining Wire Harness and Wire Harness

Code	See Page	Joining Wire Harness and Wire Harness (Connector Location)
IE1	50	Roof Wire and Cowl Wire (Near the Bottom of Left Front Pillar)
IK3	51	Engine Room Main Wire and Cowl Wire (Right Cowl Side Panel)

: Ground Points

Code	See Page	Ground Points Location
IA	50	Left Cowl Side Panel
IC	50	Right Cowl Side Panel

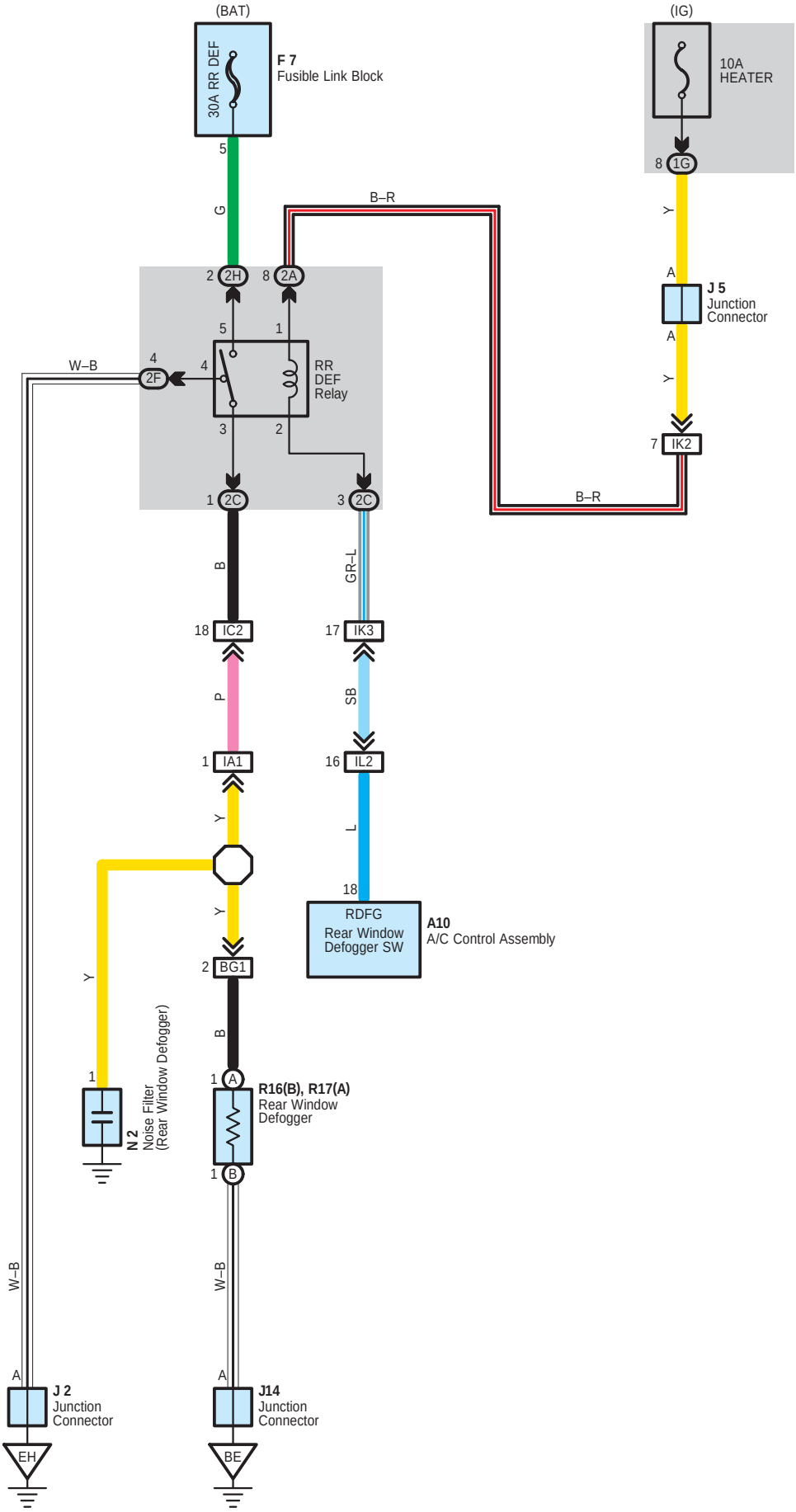
(BAT)
30A RR DEF
F 7
Fusible Link Block
(IG)
10A
HEATER
8 1G
Y
B–R
A
J 5
Junction
Connector
A
Y
7 IK2
B–R
5
G
2 2H
8 2A
5
1
4
W–B
4 2F
4
RR
DEF
Relay
3
2
1 2C
3 2C
B
GR–L
18 IC2
17 IK3
P
SB
1 IA1
16 IL2
Y
L
18
RDFG
Rear Window
Defogger SW
A10
A/C Control Assembly
Y
2 BG1
B
Y
1
1 A
R16(B), R17(A)
Rear Window
Defogger
N 2
Noise Filter
(Rear Window Defogger)
1 B
W–B
W–B
A
J 2
Junction
Connector
EH
A
J14
Junction
Connector
BE

: Parts Location

Code	See Page	Code	See Page	Code		See Page
A10	42	J2	41 (2AZ–FE)	R16	B	45
F7	38 (3MZ–FE)	J5	43	R17	A	45
	40 (2AZ–FE)	J14	44			
J2	39 (3MZ–FE)	N2	44			

: Junction Block and Wire Harness Connector

Code	See Page	Junction Block and Wire Harness (Connector Location)
1G	29	Cowl Wire and Instrument Panel J/B (Lower Finish Panel)
2A	27	Engine Room Main Wire and Engine Room J/B (Engine Compartment Left)
2C		
2F		
2H		

: Connector Joining Wire Harness and Wire Harness

Code	See Page	Joining Wire Harness and Wire Harness (Connector Location)
IA1	50	Cowl Wire and Floor No.2 Wire (Left Kick Panel)
IC2	50	Engine Room Main Wire and Cowl Wire (Left Cowl Side Panel)
IK2	51	Engine Room Main Wire and Cowl Wire (Right Cowl Side Panel)
IK3		
IL2	51	Instrument Panel Wire and Cowl Wire (Upper Side of Passenger Side J/B)
BG1	52	Back Door No.1 Wire and Floor No.2 Wire (Rear Left of the Roof)

: Ground Points

Code	See Page	Ground Points Location
EH	48 (3MZ–FE)	Under the Left Headlight
	49 (2AZ–FE)	
BE	52	Left Side of Back Door

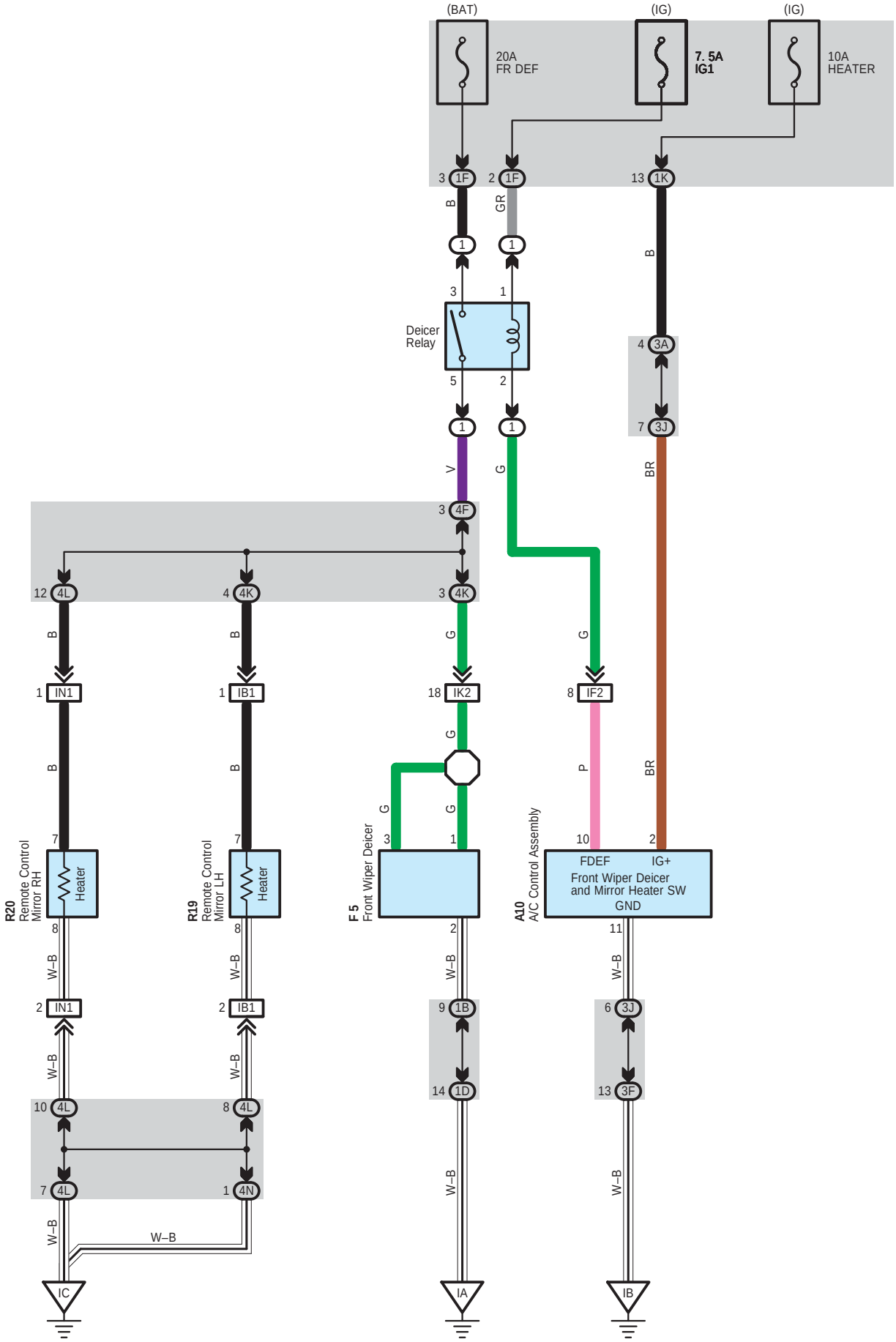
(BAT)
(IG)
(IG)
20A
FR DEF
7. 5A
IG1
10A
HEATER
3 1F
2 1F
13 1K
B
GR
B
1
1
1
3
1
Deicer
Relay
5
2
4 3A
1
1
7 3J
V
G
BR
3 4F
12 4L
4 4K
3 4K
B
B
G
G
1 IN1
1 IB1
18 IK2
8 IF2
B
B
G
P
BR
G
G
7
7
3
1
10
2
R20
Remote Control
Mirror RH
Heater
R19
Remote Control
Mirror LH
Heater
F 5
Front Wiper Deicer
A10
A/C Control Assembly
FDEF
IG+
Front Wiper Deicer
and Mirror Heater SW
GND
8
8
2
11
W–B
W–B
W–B
2 IN1
2 IB1
9 1B
6 3J
W–B
W–B
14 1D
13 3F
10 4L
8 4L
7 4L
1 4N
W–B
W–B
W–B
W–B
IC
IA
IB

: Parts Location

Code	See Page	Code	See Page	Code	See Page
A10	42	F5	40 (2AZ–FE)	R20	45
F5	38 (3MZ–FE)	R19	45		

: Relay Blocks

Code	See Page	Relay Blocks (Relay Block Location)
1	24	R/B No.1 (Lower Finish Panel)

: Junction Block and Wire Harness Connector

Code	See Page	Junction Block and Wire Harness (Connector Location)
1B	29	Engine Room Main Wire and Instrument Panel J/B (Lower Finish Panel)
1D	29	Cowl Wire and Instrument Panel J/B (Lower Finish Panel)
1F		
1K	28	Instrument Panel Wire and Instrument Panel J/B (Lower Finish Panel)
3A	30	Instrument Panel Wire and Center J/B (Behind the Instrument Panel Center)
3F		
3J	31	
4F	33	Cowl Wire and Passenger Side J/B (Right Side of Grove Box)
4K	32	
4L		
4N		

: Connector Joining Wire Harness and Wire Harness

Code	See Page	Joining Wire Harness and Wire Harness (Connector Location)
IB1	50	Front Door LH Wire and Cowl Wire (Left Kick Panel)
IF2	50	Instrument Panel Wire and Cowl Wire (Right Side of Instrument Panel J/B)
IK2	51	Engine Room Main Wire and Cowl Wire (Right Cowl Side Panel)
IN1	51	Front Door RH Wire and Cowl Wire (Right Kick Panel)

: Ground Points

Code	See Page	Ground Points Location
IA	50	Left Cowl Side Panel
IB	50	Right Instrument Panel Brace
IC	50	Right Cowl Side Panel

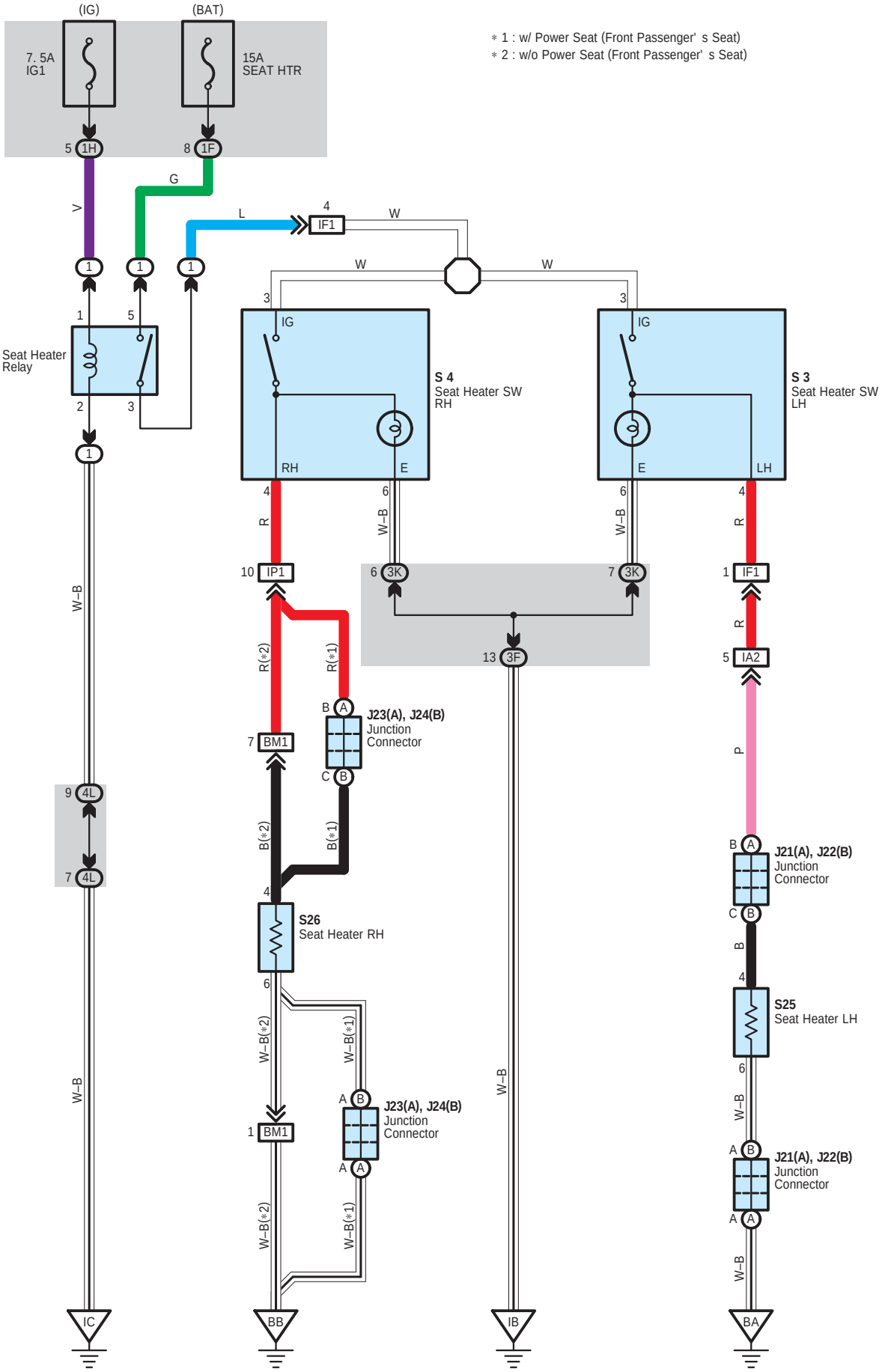
(IG)
(BAT)
7. 5A
IG1
15A
SEAT HTR
* 1 : w/ Power Seat (Front Passenger' s Seat)
* 2 : w/o Power Seat (Front Passenger' s Seat)
Seat Heater
Relay
S 4
Seat Heater SW
RH
S 3
Seat Heater SW
LH
J23(A), J24(B)
Junction
Connector
J21(A), J22(B)
Junction
Connector
S26
Seat Heater RH
S25
Seat Heater LH
IC
BB
IB
BA

: Parts Location

Code		See Page	Code		See Page	Code	See Page
J21	A	46 (*1)	J24	B	46 (*1)	S25	46 (*1)
J22	B	46 (*1)	S3		43	S26	46 (*1)
J23	A	46 (*1)	S4		43		47 (*2)

: Relay Blocks

Code	See Page	Relay Blocks (Relay Block Location)
1	24	R/B No.1 (Lower Finish Panel)

: Junction Block and Wire Harness Connector

Code	See Page	Junction Block and Wire Harness (Connector Location)
1F	29	Cowl Wire and Instrument Panel J/B (Lower Finish Panel)
1H		
3F	30	Instrument Panel Wire and Center J/B (Behind the Instrument Panel Center)
3K	31	
4L	32	Cowl Wire and Passenger Side J/B (Right Side of Grove Box)

: Connector Joining Wire Harness and Wire Harness

Code	See Page	Joining Wire Harness and Wire Harness (Connector Location)
IA2	50	Cowl Wire and Floor No.2 Wire (Left Kick Panel)
IF1	50	Instrument Panel Wire and Cowl Wire (Right Side of Instrument Panel J/B)
IP1	51	Instrument Panel Wire and Floor Wire (Left Side of Passenger Side J/B)
BM1	55 (*2)	Floor Wire and Front Seat RH Wire (Under the Front Passenger's Seat)

: Ground Points

Code	See Page	Ground Points Location
IB	50	Right Instrument Panel Brace
IC	50	Right Cowl Side Panel
BA	52	Left Center Pillar
BB	52	Right Center Pillar

* 1 : w/ Power Seat * 2 : w/o Power Seat

* 1 : w/ Theft Deterrent System
* 2 : w/o Theft Deterrent System
* 3 : w/ Navigation System
* 4 : w/o Navigation System

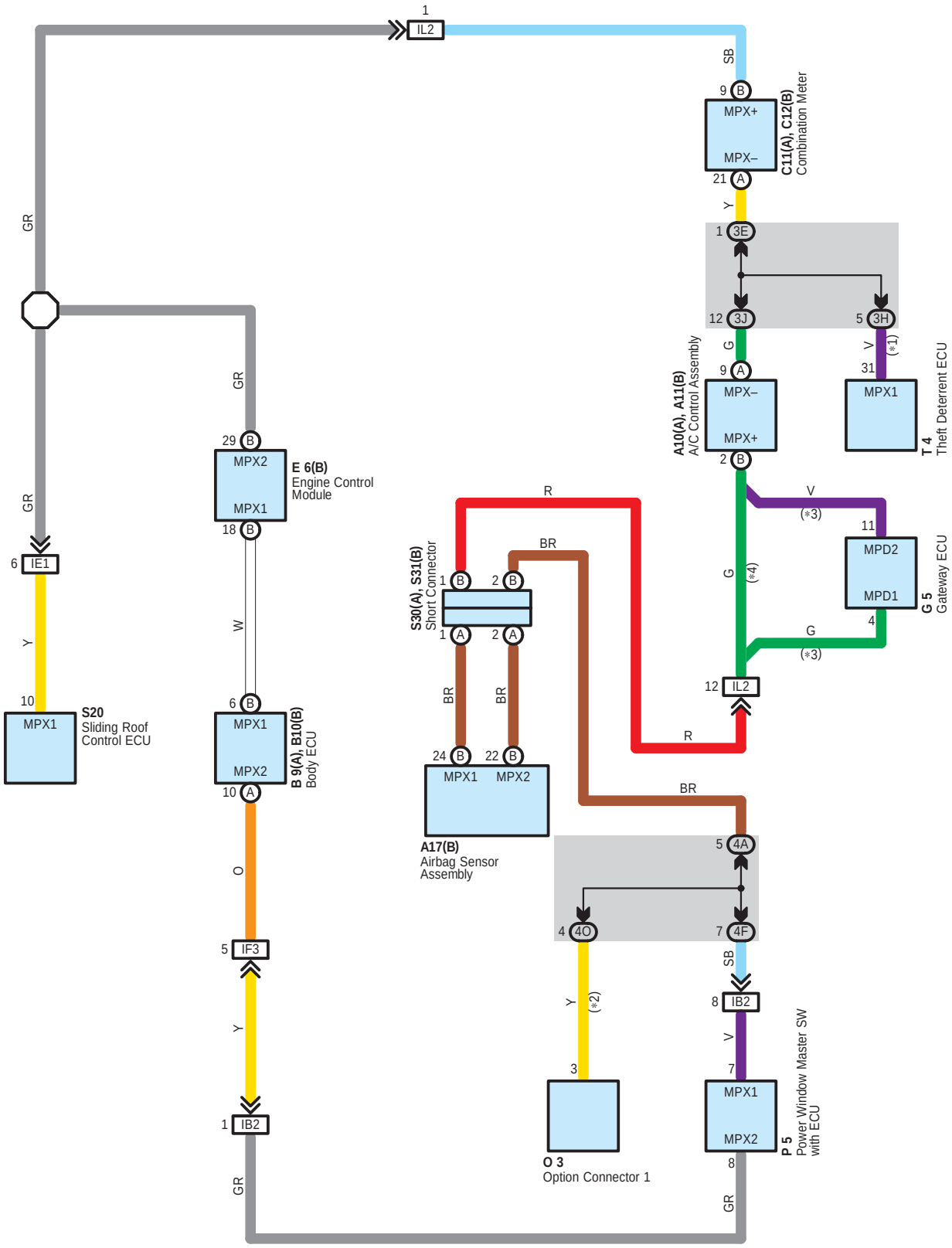

System Outline

The multiplex communication system communicates among the A/C control assembly, body ECU, combination meter, engine control module, option connector 1, power window master SW with ECU, sliding roof control ECU and theft deterrent ECU and controls the following systems according to the signals from respective sensors or switches.

Multiplex Communication System Includes Following Systems

- **Air Conditioning (Automatic A/C)**
- **Air Conditioning (Manual A/C)**
- **Automatic Light Control**
- **Combination Meter**
- **Door Lock Control**
- **Electronically Controlled Transmission and A/T Indicator (3MZ–FE)**
- **Electronically Controlled Transmission and A/T Indicator (2AZ–FE)**
- **Engine Control (3MZ–FE)**
- **Engine Control (2AZ–FE)**
- **Headlight**
- **Interior Light**
- **Key Reminder**
- **Light Auto Turn Off System**
- **Moon Roof**
- **Navigation System**
- **Power Window**
- **Seat Belt Warning**
- **Theft Deterrent System**
- **Wireless Door Lock Control**

: Parts Location

Code		See Page	Code		See Page	Code		See Page
A10	A	42	C11	A	42	P5		44
A11	B	42	C12	B	42	S20		45
A17	B	42	E6	B	42	S30	A	43
B9	A	42	G5		43	S31	B	43
B10	B	42	O3		43	T4		43

: Junction Block and Wire Harness Connector

Code	See Page	Junction Block and Wire Harness (Connector Location)
3E	30	Instrument Panel Wire and Center J/B (Behind the Instrument Panel Center)
3H	31	
3J		
4A	33	Cowl Wire and Passenger Side J/B (Right Side of Grove Box)
4F		
4O	32	

: **Connector Joining Wire Harness and Wire Harness**

Code	See Page	Joining Wire Harness and Wire Harness (Connector Location)
IB2	50	Front Door LH Wire and Cowl Wire (Left Kick Panel)
IE1	50	Roof Wire and Cowl Wire (Near the Bottom of Left Front Pillar)
IF3	50	Instrument Panel Wire and Cowl Wire (Right Side of Instrument Panel J/B)
IL2	51	Instrument Panel Wire and Cowl Wire (Upper Side of Passenger Side J/B)

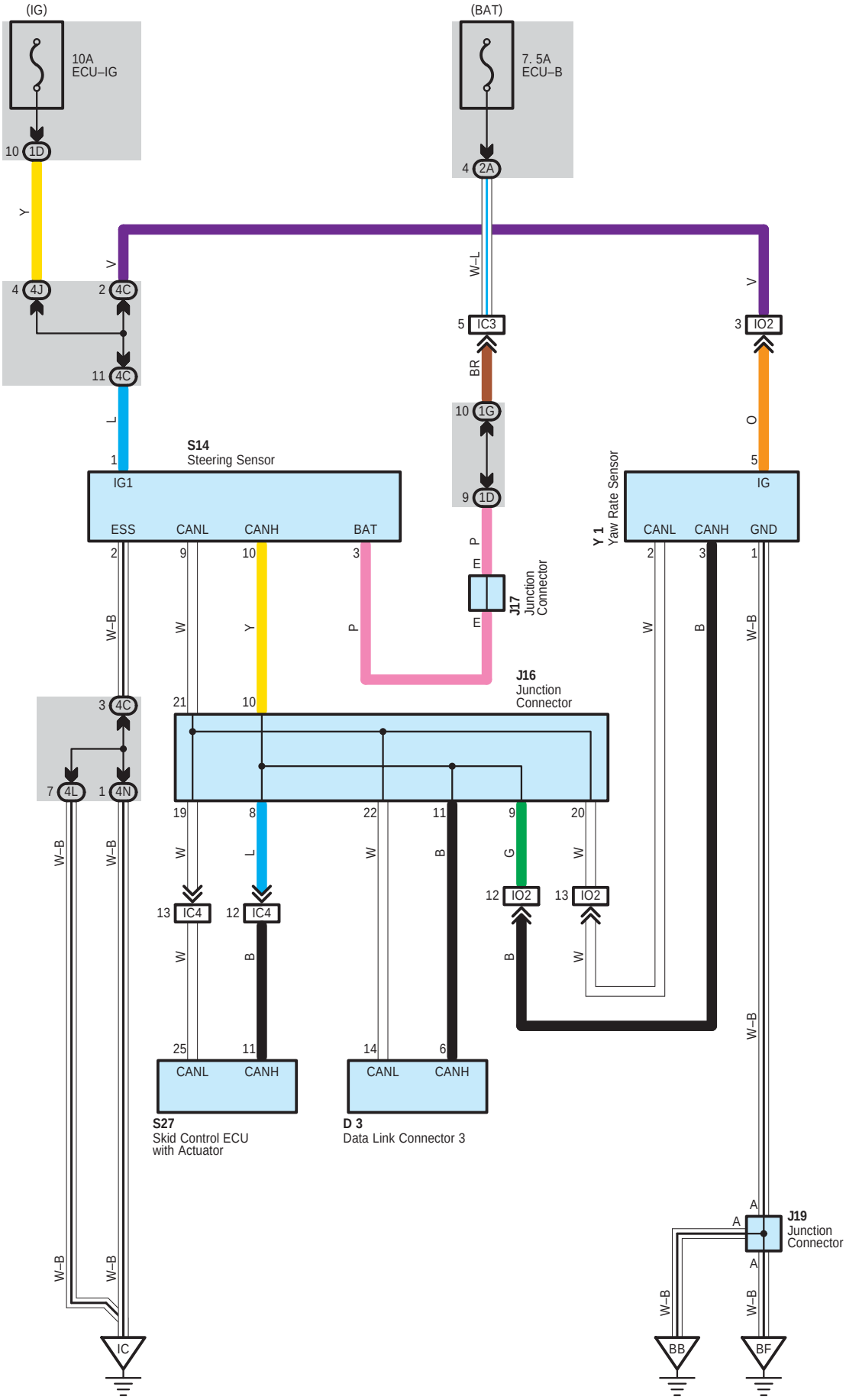
(IG)
10A
ECU–IG
10 1D
(BAT)
7. 5A
ECU–B
4 2A
Y
V
W–L
V
4 4J
2 4C
11 4C
5 IC3
3 IO2
BR
O
10 1G
L
1
S14
Steering Sensor
IG1
ESS
CANL
CANH
BAT
9 1D
5
IG
Y 1
Yaw Rate Sensor
CANL
CANH
GND
P
E
J17
Junction
Connector
E
2
9
10
3
2
3
1
W–B
W
Y
P
W
B
W–B
J16
Junction
Connector
3 4C
21
10
7 4L
1 4N
19
8
22
11
9
20
W–B
W–B
W
L
W
B
G
W
12 IO2
13 IO2
13 IC4
12 IC4
B
W
W–B
25
11
14
6
CANL
CANH
CANL
CANH
S27
Skid Control ECU
with Actuator
D 3
Data Link Connector 3
A
A
J19
Junction
Connector
A
W–B
W–B
W–B
W–B
IC
BB
BF

System Outline

Multiplex communication system (CAN) uses a serial communication protocol and communicates with a differential voltage. In this network system, TERMINALS CANH and CANL are used for communication between the ECUs and sensors, and excellent data communication speed and communication error detecting facility are provided.

This system is working for the following systems:
* ABS
* Tire Pressure Warning System
* TRAC
* VSC

: Parts Location

Code	See Page	Code	See Page	Code	See Page
D3	42	J19	44	S27	41 (2AZ–FE)
J16	43	S14	43	Y1	45
J17	43	S27	39 (3MZ–FE)		

: Junction Block and Wire Harness Connector

Code	See Page	Junction Block and Wire Harness (Connector Location)
1D	29	Cowl Wire and Instrument Panel J/B (Lower Finish Panel)
1G		
2A	27	Engine Room Main Wire and Engine Room J/B (Engine Compartment Left)
4C	33	Cowl Wire and Passenger Side J/B (Right Side of Grove Box)
4J	32	
4L		
4N		

: Connector Joining Wire Harness and Wire Harness

Code	See Page	Joining Wire Harness and Wire Harness (Connector Location)
IC3	50	Engine Room Main Wire and Cowl Wire (Left Cowl Side Panel)
IC4		
IO2	51	Cowl Wire and Floor Wire (Right Kick Panel)

: Ground Points

Code	See Page	Ground Points Location
IC	50	Right Cowl Side Panel
BB	52	Right Center Pillar
BF	52	Near the Rear Side Marker Light RH

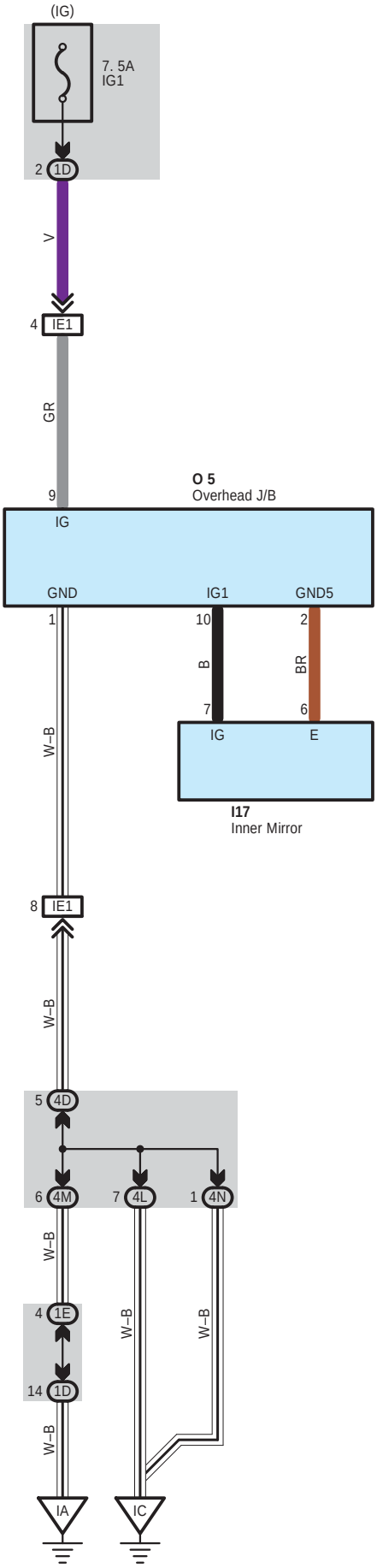
(IG)
7. 5A
IG1
2
1D
V
4
IE1
GR
9
O 5
Overhead J/B
IG
GND
IG1
GND5
1
10
2
B
BR
7
6
IG
E
I17
Inner Mirror
W–B
8
IE1
W–B
5
4D
6
4M
7
4L
1
4N
W–B
4
1E
14
1D
W–B
W–B
W–B
IA
IC

: Parts Location

Code	See Page	Code	See Page	Code	See Page
I17	44	O5	44		

: Junction Block and Wire Harness Connector

Code	See Page	Junction Block and Wire Harness (Connector Location)
1D	29	Cowl Wire and Instrument Panel J/B (Lower Finish Panel)
1E		
4D	33	Cowl Wire and Passenger Side J/B (Right Side of Grove Box)
4L	32	
4M		
4N		

: Connector Joining Wire Harness and Wire Harness

Code	See Page	Joining Wire Harness and Wire Harness (Connector Location)
IE1	50	Roof Wire and Cowl Wire (Near the Bottom of Left Front Pillar)

: Ground Points

Code	See Page	Ground Points Location
IA	50	Left Cowl Side Panel
IC	50	Right Cowl Side Panel

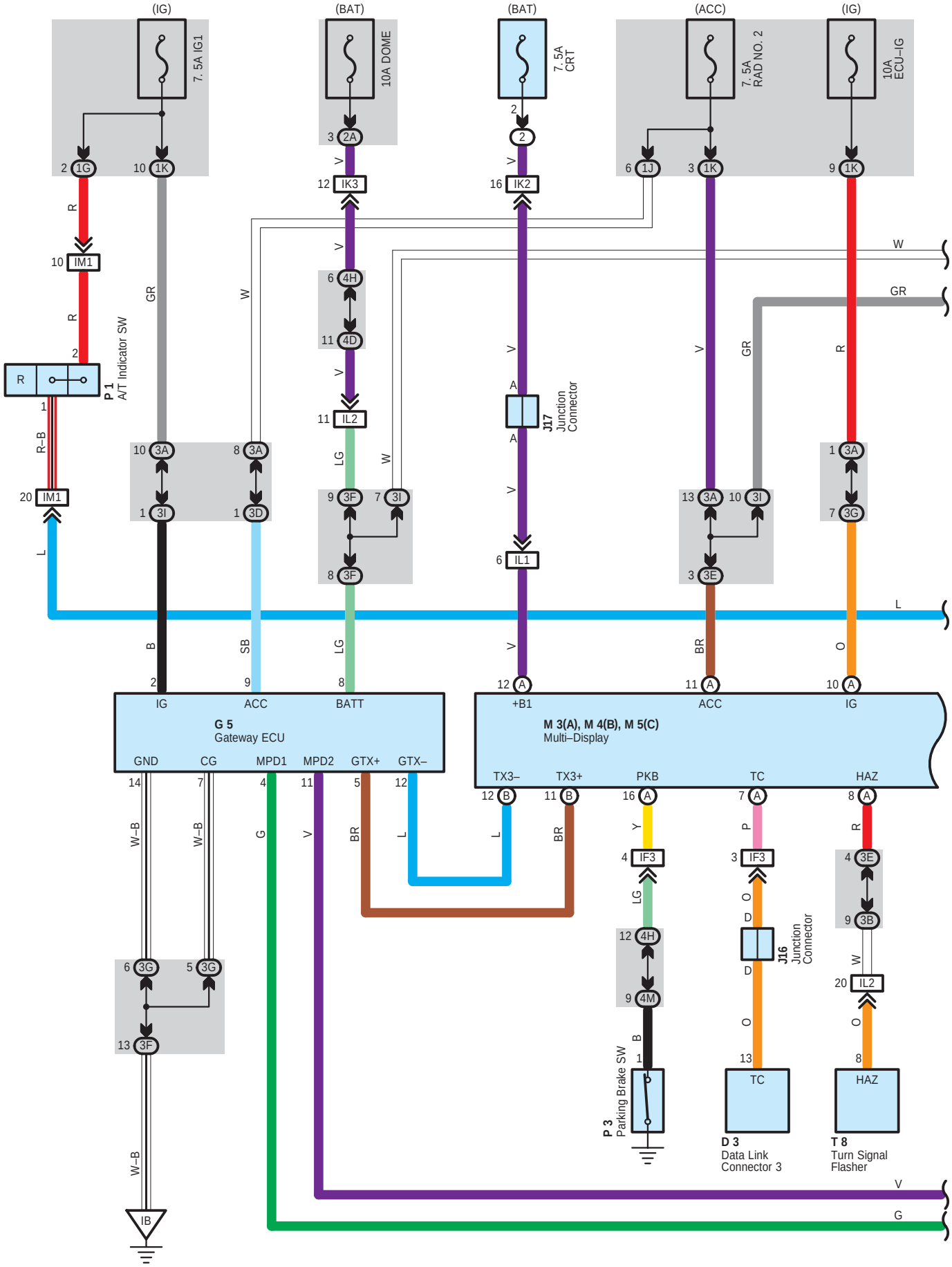
(IG)
7. 5A IG1
(BAT)
10A DOME
(BAT)
7. 5A CRT
(ACC)
7. 5A RAD NO. 2
(IG)
10A ECU–IG
2 1G
10 1K
6 1J
3 1K
9 1K
R
10 IM1
R
2
P 1
A/T Indicator SW
R
1
R–B
20 IM1
L
GR
W
12 IK3
16 IK2
6 4H
11 4D
11 IL2
LG
9 3F
7 3I
8 3F
W
V
A
J17
Junction Connector
A
6 IL1
10 3A
1 3I
8 3A
1 3D
13 3A
10 3I
3 3E
1 3A
7 3G
L
B
SB
LG
BR
O
2
9
8
12 A
11 A
10 A
IG
ACC
BATT
+B1
ACC
IG
G 5
Gateway ECU
M 3(A), M 4(B), M 5(C)
Multi–Display
GND
CG
MPD1
MPD2
GTX+
GTX–
TX3–
TX3+
PKB
TC
HAZ
14
7
4
11
5
12
12 B
11 B
16 A
7 A
8 A
W–B
W–B
G
V
BR
L
L
BR
Y
P
R
4 IF3
3 IF3
4 3E
LG
O
D
9 3B
12 4H
9 4M
J16
Junction Connector
D
W
20 IL2
O
B
1
O
13
8
6 3G
5 3G
13 3F
W–B
IB
P 3
Parking Brake SW
TC
HAZ
D 3
Data Link Connector 3
T 8
Turn Signal Flasher
V
G

＊1 : w/ Rear Seat Entertainment System
＊2 : w/o Rear Seat Entertainment System
＊3 : Shielded

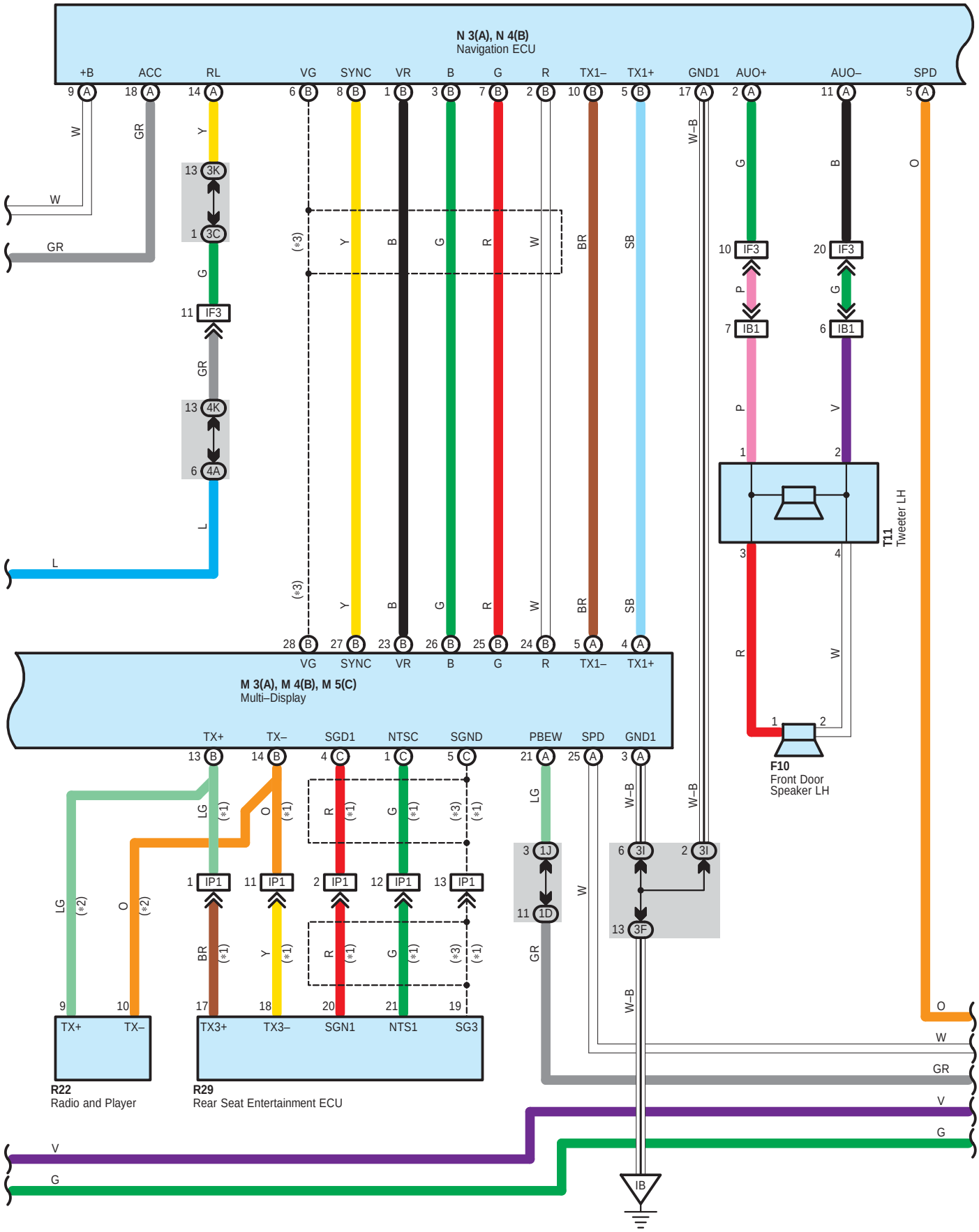

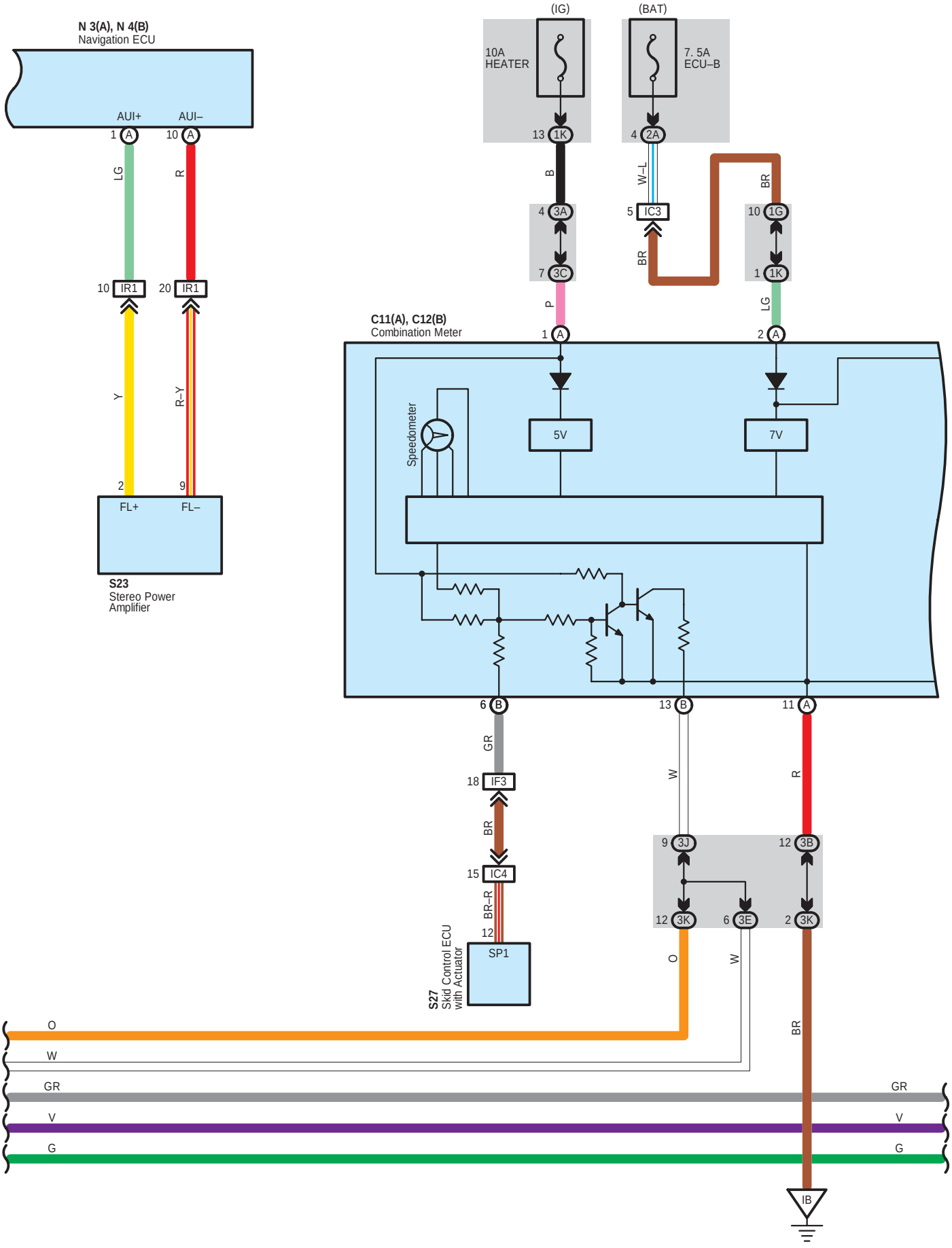
N 3(A), N 4(B)
Navigation ECU
AUI+
AUI–
1 A
10 A
LG
R
10 IR1
20 IR1
Y
R–Y
2
9
FL+
FL–
S23
Stereo Power Amplifier
(IG)
(BAT)
10A HEATER
7. 5A ECU–B
13 1K
4 2A
B
W–L
BR
4 3A
5 IC3
10 1G
7 3C
1 1K
P
LG
C11(A), C12(B)
Combination Meter
1 A
2 A
Speedometer
5V
7V
6 B
13 B
11 A
GR
W
R
18 IF3
BR
9 3J
12 3B
15 IC4
12 3K
6 3E
2 3K
BR–R
12
SP1
S27
Skid Control ECU with Actuator
O
W
BR
O
W
GR
V
G
GR
V
G
IB

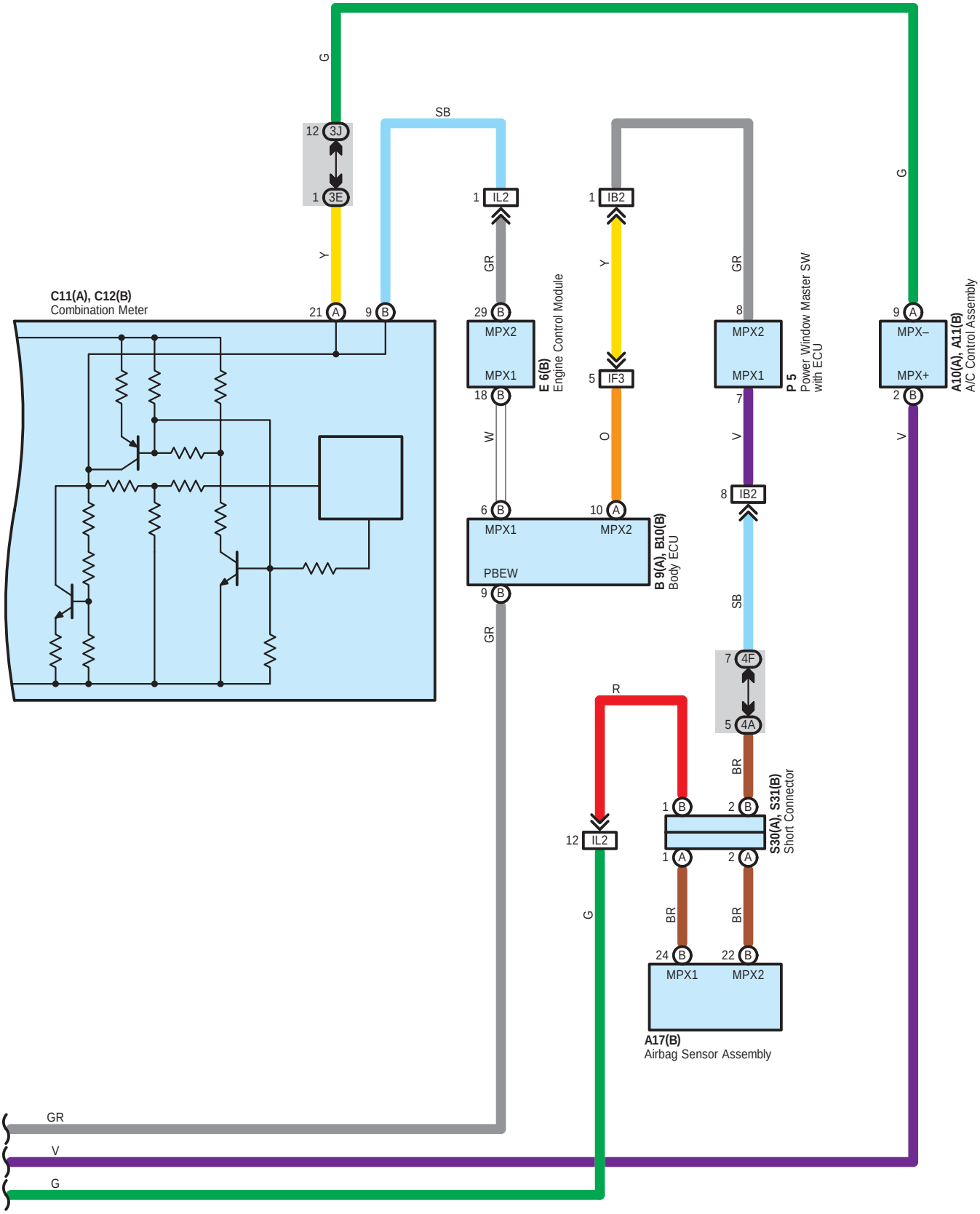
C11(A), C12(B)
Combination Meter
21 A
9 B
G
SB
Y
12 3J
1 3E
1 IL2
GR
29 B
MPX2
MPX1
18 B
W
6 B
MPX1
PBEW
9 B
GR
E 6(B)
Engine Control Module
1 IB2
Y
5 IF3
O
10 A
MPX2
B 9(A), B10(B)
Body ECU
GR
8
MPX2
MPX1
7
V
8 IB2
SB
7 4F
5 4A
BR
P 5
Power Window Master SW
with ECU
G
9 A
MPX–
MPX+
2 B
V
A10(A), A11(B)
A/C Control Assembly
R
12 IL2
G
1 B
2 B
1 A
2 A
S30(A), S31(B)
Short Connector
BR
BR
24 B
22 B
MPX1
MPX2
A17(B)
Airbag Sensor Assembly
GR
V
G

: Parts Location

Code		See Page	Code		See Page	Code		See Page
A10	A	42	J16		43	R22		43
A11	B	42	J17		43	R29		45
A17	B	42	M3	A	43	S23		45
B9	A	42	M4	B	43	S27		39 (3MZ–FE)
B10	B	42	M5	C	43			41 (2AZ–FE)
C11	A	42	N3	A	43	S30	A	43
C12	B	42	N4	B	43	S31	B	43
D3		42	P1		39 (3MZ–FE)	T8		43
E6	B	42			41 (2AZ–FE)	T11		45
F10		44	P3		43			
G5		43	P5		44			

: Relay Blocks

Code	See Page	Relay Blocks (Relay Block Location)
2	22	Engine Room R/B (Engine Compartment Left)

: Junction Block and Wire Harness Connector

Code	See Page	Junction Block and Wire Harness (Connector Location)
1D	29	Cowl Wire and Instrument Panel J/B (Lower Finish Panel)
1G		
1J	28	Instrument Panel Wire and Instrument Panel J/B (Lower Finish Panel)
1K		
2A	27	Engine Room Main Wire and Engine Room J/B (Engine Compartment Left)
3A	30	Instrument Panel Wire and Center J/B (Behind the Instrument Panel Center)
3B		
3C		
3D		
3E		
3F		
3G	31	
3I		
3J		
3K		
4A	33	Cowl Wire and Passenger Side J/B (Right Side of Grove Box)
4D		
4F		
4H		
4K	32	
4M		

: Connector Joining Wire Harness and Wire Harness

Code	See Page	Joining Wire Harness and Wire Harness (Connector Location)
IB1	50	Front Door LH Wire and Cowl Wire (Left Kick Panel)
IB2		
IC3	50	Engine Room Main Wire and Cowl Wire (Left Cowl Side Panel)
IC4		
IF3	50	Instrument Panel Wire and Cowl Wire (Right Side of Instrument Panel J/B)
IK2	51	Engine Room Main Wire and Cowl Wire (Right Cowl Side Panel)
IK3		
IL1	51	Instrument Panel Wire and Cowl Wire (Upper Side of Passenger Side J/B)
IL2		
IM1	51	Engine Wire and Cowl Wire (Right Kick Panel)
IP1	51	Instrument Panel Wire and Floor Wire (Left Side of Passenger Side J/B)
IR1	51	Instrument Panel Wire and Floor Wire (Under the Shift Lever)

: Ground Points

Code	See Page	Ground Points Location
IB	50	Right Instrument Panel Brace

Audio System with 8 Speaker

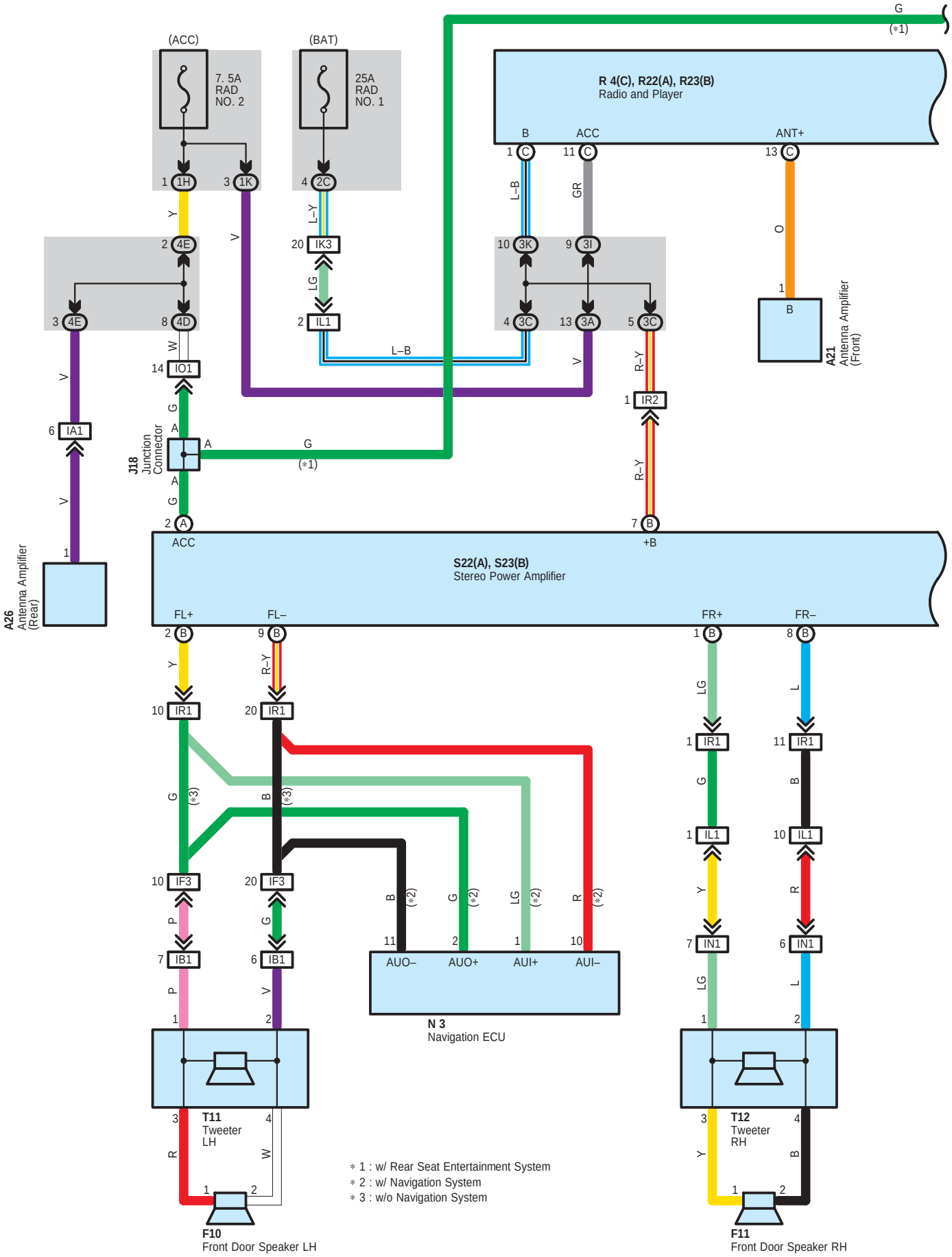

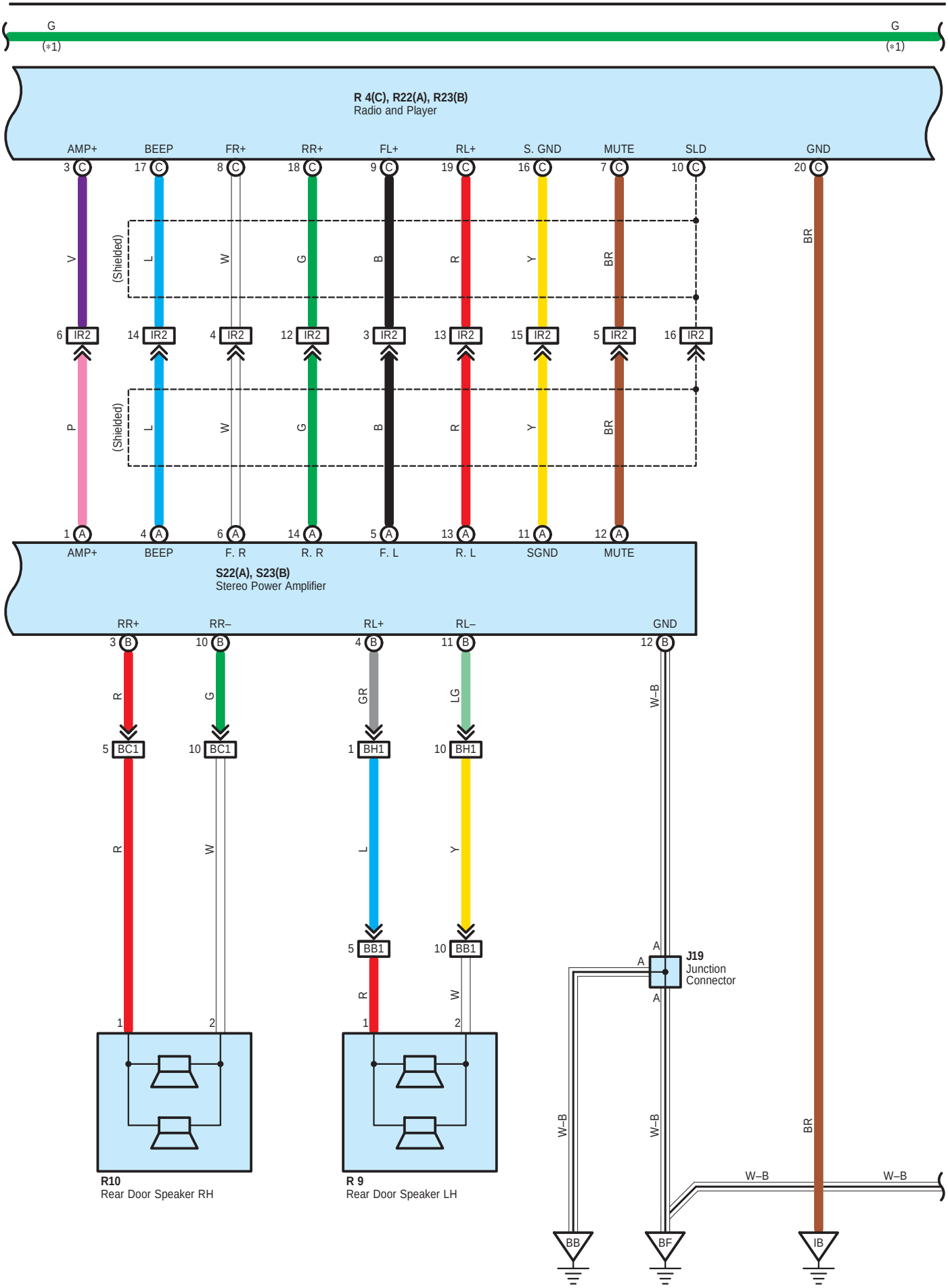
G
(*1)
G
(*1)
R 4(C), R22(A), R23(B)
Radio and Player
AMP+
BEEP
FR+
RR+
FL+
RL+
S. GND
MUTE
SLD
GND
3 C
17 C
8 C
18 C
9 C
19 C
16 C
7 C
10 C
20 C
V
L
W
G
B
R
Y
BR
(Shielded)
6 IR2
14 IR2
4 IR2
12 IR2
3 IR2
13 IR2
15 IR2
5 IR2
16 IR2
P
L
W
G
B
R
Y
BR
(Shielded)
1 A
4 A
6 A
14 A
5 A
13 A
11 A
12 A
AMP+
BEEP
F. R
R. R
F. L
R. L
SGND
MUTE
S22(A), S23(B)
Stereo Power Amplifier
RR+
RR–
RL+
RL–
GND
3 B
10 B
4 B
11 B
12 B
R
G
GR
LG
W–B
5 BC1
10 BC1
1 BH1
10 BH1
R
W
L
Y
5 BB1
10 BB1
R
W
1
2
1
2
A
A
A
J19
Junction
Connector
W–B
W–B
BR
W–B
W–B
BB
BF
IB
R10
Rear Door Speaker RH
R 9
Rear Door Speaker LH

Audio System with 8 Speaker

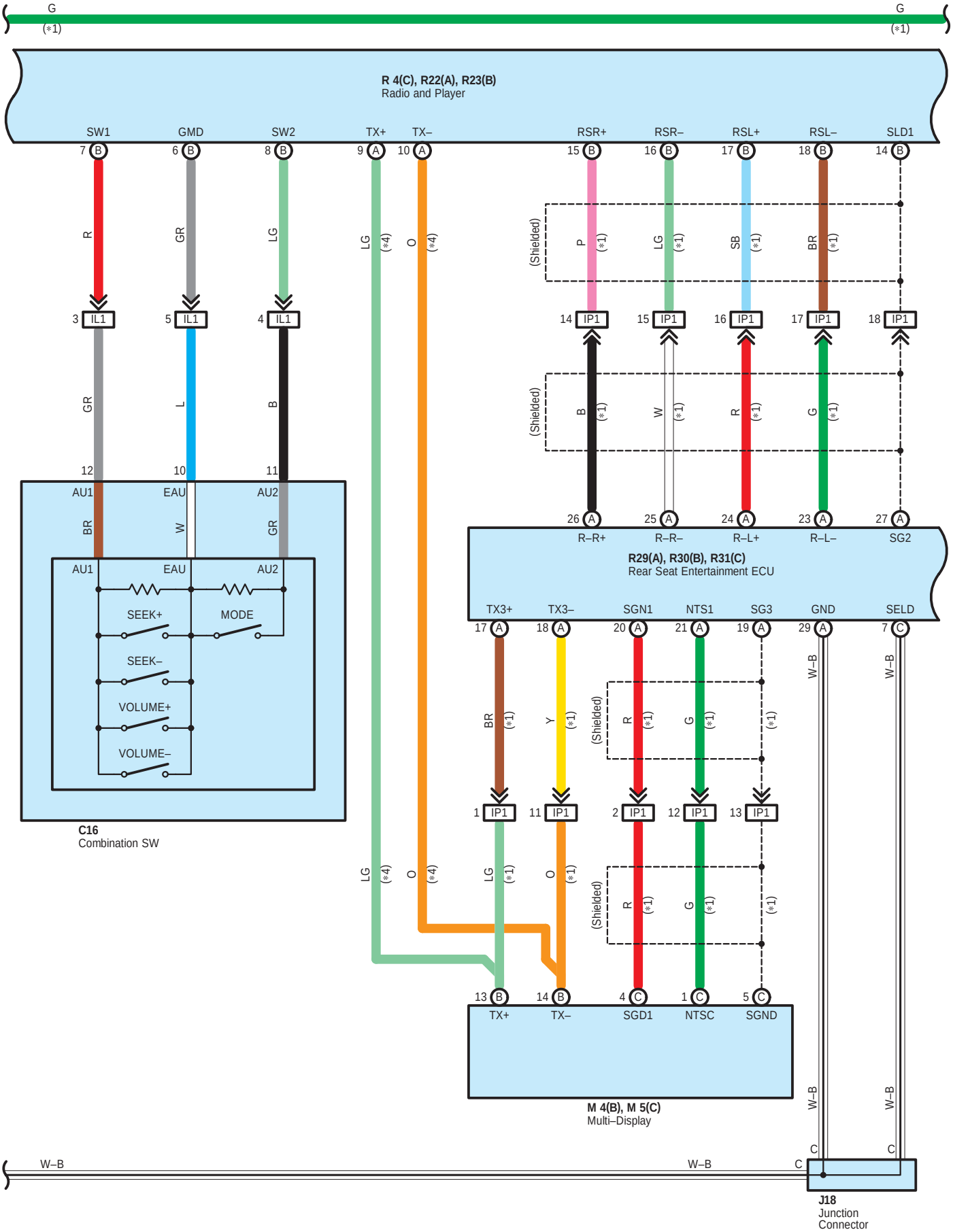

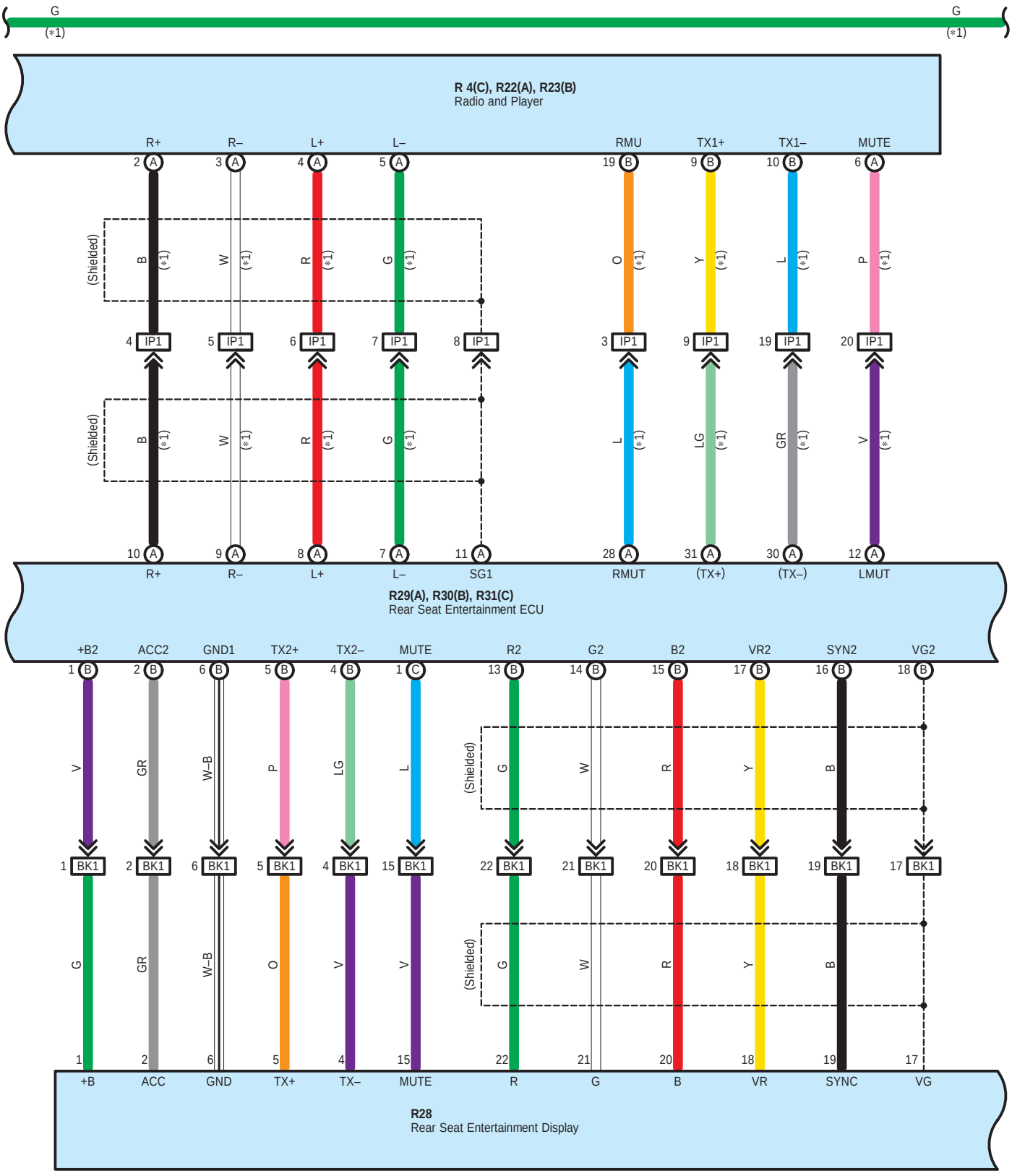

∗ 1 : w/ Rear Seat Entertainment System
∗ 4 : w/o Rear Seat Entertainment System

Audio System with 8 Speaker

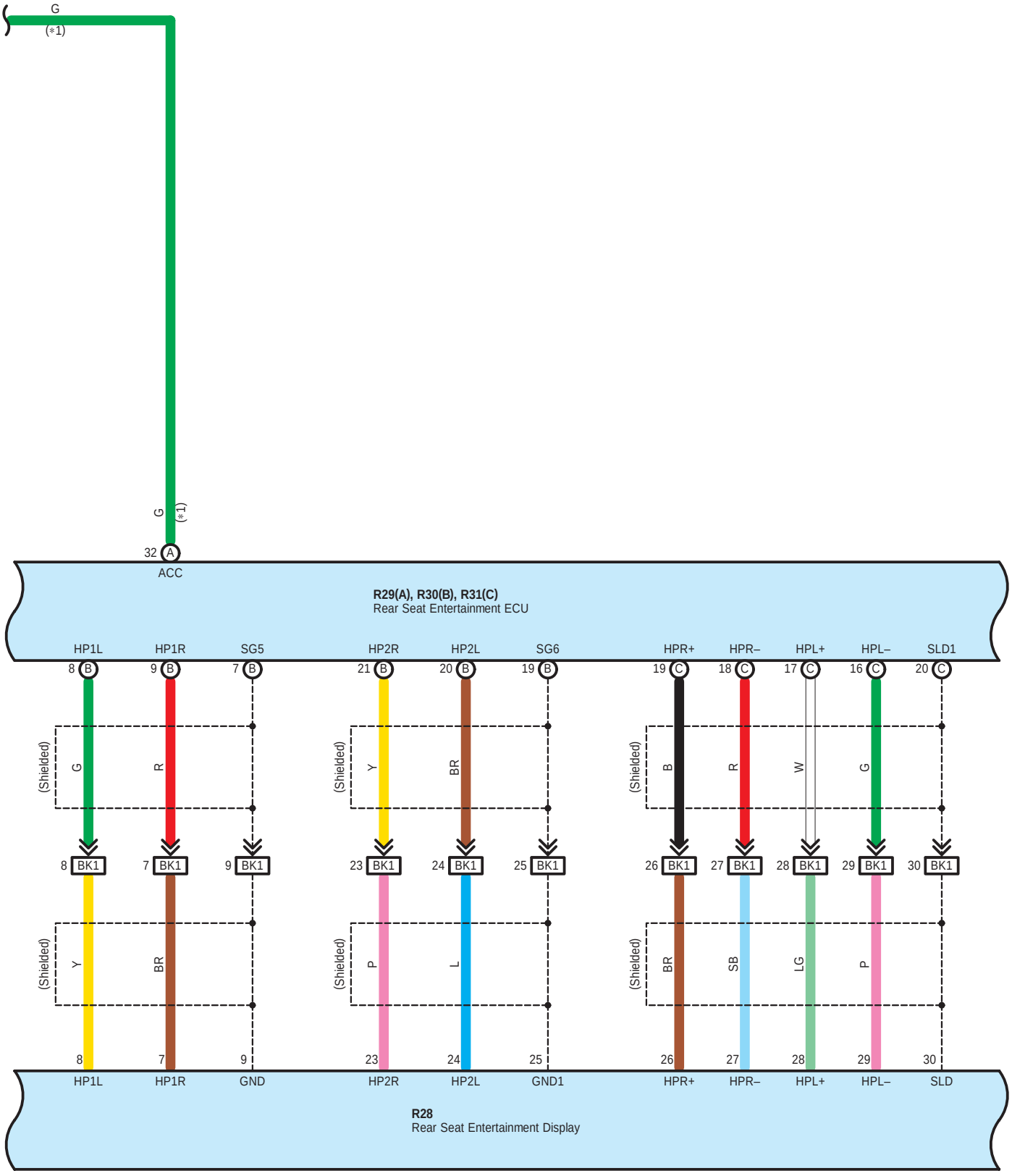

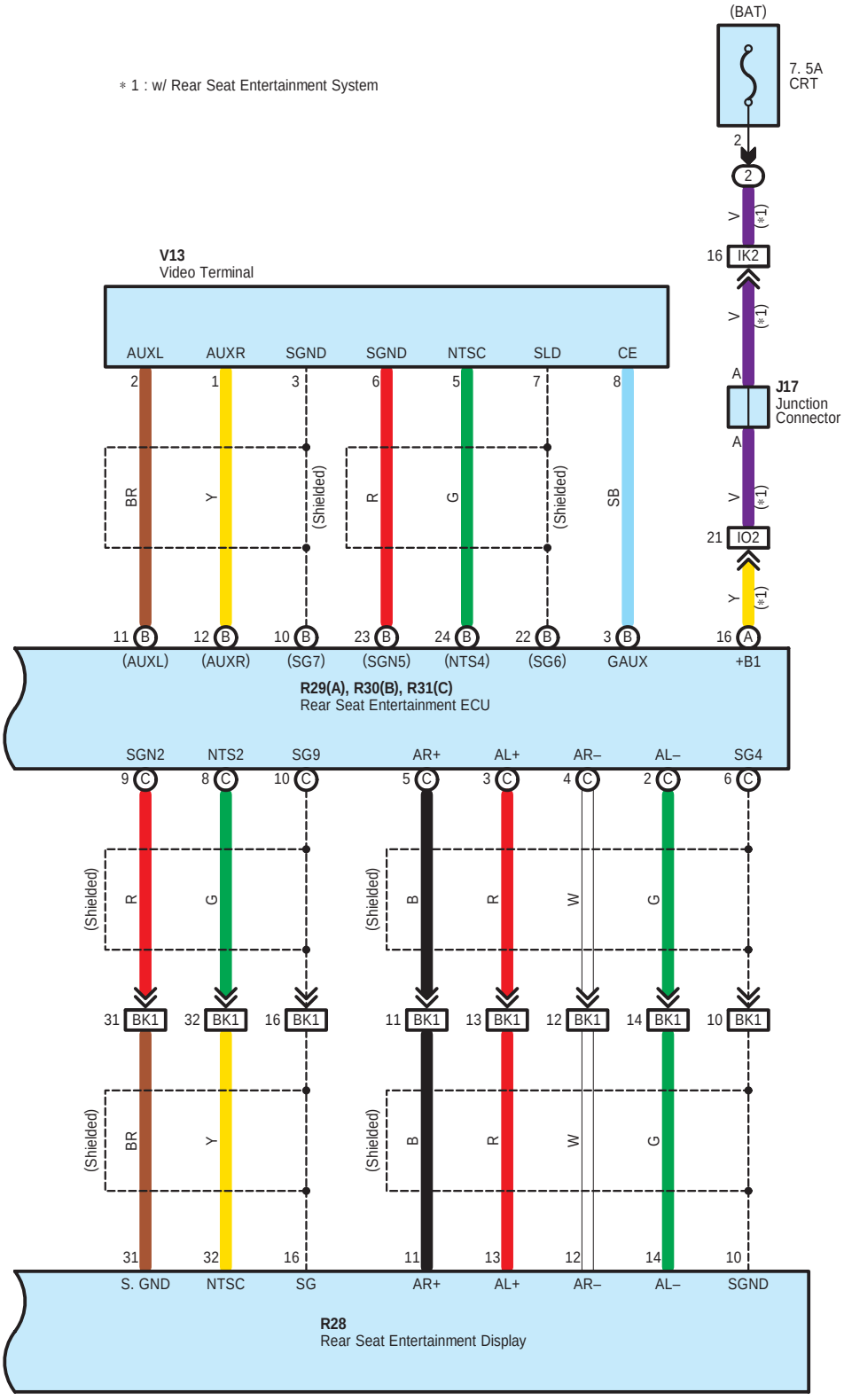
∗ 1 : w/ Rear Seat Entertainment System
(BAT)
7. 5A
CRT
2
2
V
(∗1)
16 IK2
V
(∗1)
A
J17
Junction
Connector
A
V
(∗1)
21 IO2
Y
(∗1)
V13
Video Terminal
AUXL AUXR SGND SGND NTSC SLD CE
2 1 3 6 5 7 8
BR
Y
(Shielded)
R
G
(Shielded)
SB
11 B 12 B 10 B 23 B 24 B 22 B 3 B 16 A
(AUXL) (AUXR) (SG7) (SGN5) (NTS4) (SG6) GAUX +B1
R29(A), R30(B), R31(C)
Rear Seat Entertainment ECU
SGN2 NTS2 SG9 AR+ AL+ AR– AL– SG4
9 C 8 C 10 C 5 C 3 C 4 C 2 C 6 C
(Shielded)
R
G
(Shielded)
B
R
W
G
31 BK1 32 BK1 16 BK1 11 BK1 13 BK1 12 BK1 14 BK1 10 BK1
(Shielded)
BR
Y
(Shielded)
B
R
W
G
31 32 16 11 13 12 14 10
S. GND NTSC SG AR+ AL+ AR– AL– SGND
R28
Rear Seat Entertainment Display

Audio System with 8 Speaker

: Parts Location

Code	See Page	Code	See Page	Code	See Page
A21	42	M5 C	43	R30 B	45
A26	44	N3	43	R31 C	45
C16	42	R4 C	43	S22 A	45
F10	44	R9	45	S23 B	45
F11	44	R10	45	T11	45
J17	43	R22 A	43	T12	45
J18	44	R23 B	43	V13	45
J19	44	R28	45		
M4 B	43	R29 A	45		

: Relay Blocks

Code	See Page	Relay Blocks (Relay Block Location)
2	22	Engine Room R/B (Engine Compartment Left)

: Junction Block and Wire Harness Connector

Code	See Page	Junction Block and Wire Harness (Connector Location)
1H	29	Cowl Wire and Instrument Panel J/B (Lower Finish Panel)
1K	28	Instrument Panel Wire and Instrument Panel J/B (Lower Finish Panel)
2C	27	Engine Room Main Wire and Engine Room J/B (Engine Compartment Left)
3A	30	Instrument Panel Wire and Center J/B (Behind the Instrument Panel Center)
3C		
3I	31	
3K		
4D	33	Cowl Wire and Passenger Side J/B (Right Side of Grove Box)
4E		

: Connector Joining Wire Harness and Wire Harness

Code	See Page	Joining Wire Harness and Wire Harness (Connector Location)
IA1	50	Cowl Wire and Floor No.2 Wire (Left Kick Panel)
IB1	50	Front Door LH Wire and Cowl Wire (Left Kick Panel)
IF3	50	Instrument Panel Wire and Cowl Wire (Right Side of Instrument Panel J/B)
IK2	51	Engine Room Main Wire and Cowl Wire (Right Cowl Side Panel)
IK3		
IL1	51	Instrument Panel Wire and Cowl Wire (Upper Side of Passenger Side J/B)
IN1	51	Front Door RH Wire and Cowl Wire (Right Kick Panel)
IO1	51	Cowl Wire and Floor Wire (Right Kick Panel)
IO2		
IP1	51	Instrument Panel Wire and Floor Wire (Left Side of Passenger Side J/B)
IR1	51	Instrument Panel Wire and Floor Wire (Under the Shift Lever)
IR2		
BB1	52	Rear Door No.1 LH Wire and Floor No.2 Wire (Left Center Pillar)
BC1	52	Rear Door No.1 RH Wire and Floor Wire (Right Center Pillar)
BH1	52	Floor No.2 Wire and Floor Wire (Near the Rear Side Marker Light RH)
BK1	52	Roof No.2 Wire and Floor Wire (Right Rear Quarter Panel)

: Ground Points

Code	See Page	Ground Points Location
IB	50	Right Instrument Panel Brace
BB	52	Right Center Pillar
BF	52	Near the Rear Side Marker Light RH

Audio System with 6 Speaker

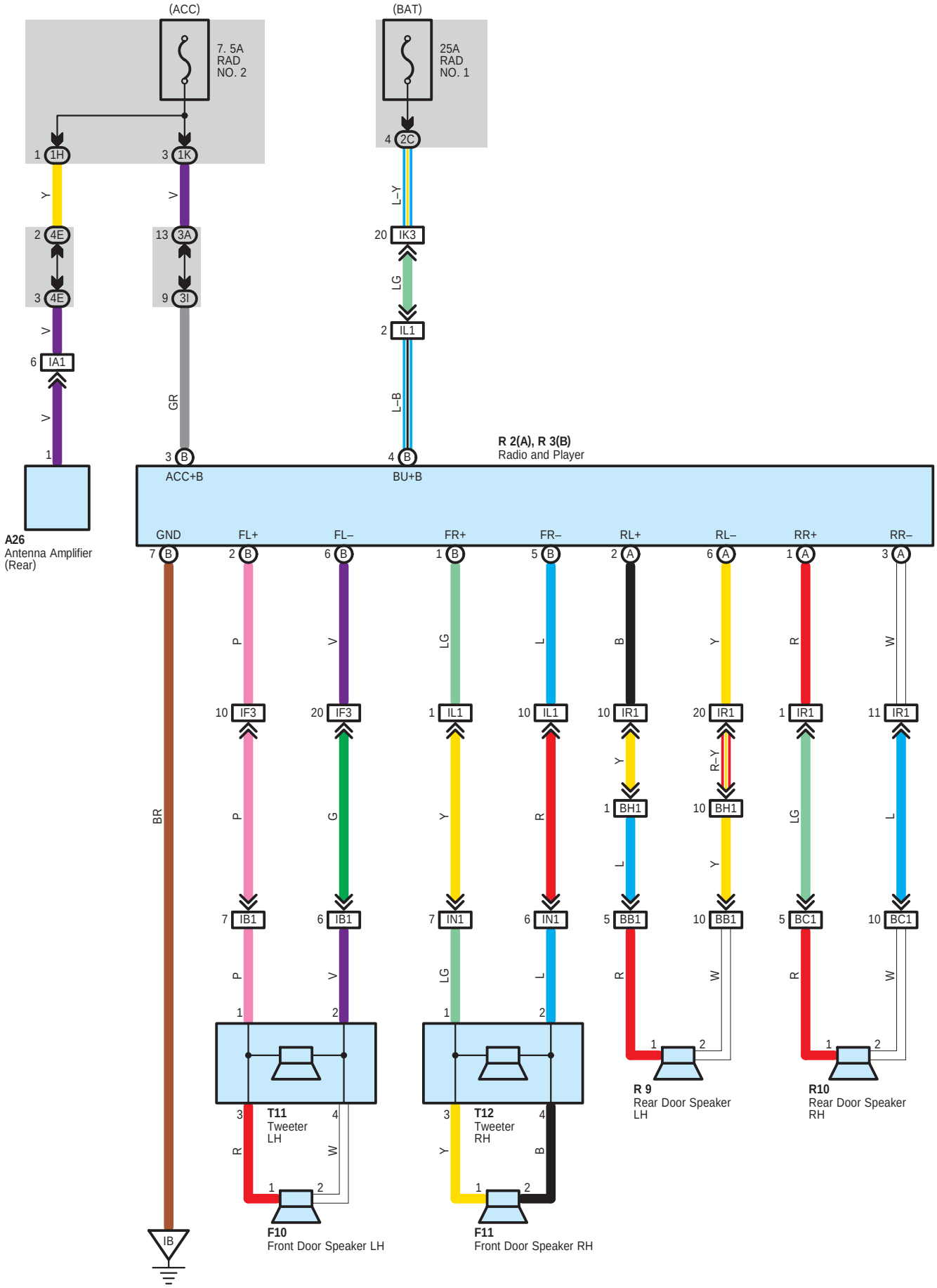

: Parts Location

Code	See Page	Code		See Page	Code	See Page
A26	44	R2	A	43	R10	45
F10	44	R3	B	43	T11	45
F11	44	R9		45	T12	45

: Junction Block and Wire Harness Connector

Code	See Page	Junction Block and Wire Harness (Connector Location)
1H	29	Cowl Wire and Instrument Panel J/B (Lower Finish Panel)
1K	28	Instrument Panel Wire and Instrument Panel J/B (Lower Finish Panel)
2C	27	Engine Room Main Wire and Engine Room J/B (Engine Compartment Left)
3A	30	Instrument Panel Wire and Center J/B (Behind the Instrument Panel Center)
3I	31	
4E	33	Cowl Wire and Passenger Side J/B (Right Side of Grove Box)

: Connector Joining Wire Harness and Wire Harness

Code	See Page	Joining Wire Harness and Wire Harness (Connector Location)
IA1	50	Cowl Wire and Floor No.2 Wire (Left Kick Panel)
IB1	50	Front Door LH Wire and Cowl Wire (Left Kick Panel)
IF3	50	Instrument Panel Wire and Cowl Wire (Right Side of Instrument Panel J/B)
IK3	51	Engine Room Main Wire and Cowl Wire (Right Cowl Side Panel)
IL1	51	Instrument Panel Wire and Cowl Wire (Upper Side of Passenger Side J/B)
IN1	51	Front Door RH Wire and Cowl Wire (Right Kick Panel)
IR1	51	Instrument Panel Wire and Floor Wire (Under the Shift Lever)
BB1	52	Rear Door No.1 LH Wire and Floor No.2 Wire (Left Center Pillar)
BC1	52	Rear Door No.1 RH Wire and Floor Wire (Right Center Pillar)
BH1	52	Floor No.2 Wire and Floor Wire (Near the Rear Side Marker Light RH)

: Ground Points

Code	See Page	Ground Points Location
IB	50	Right Instrument Panel Brace

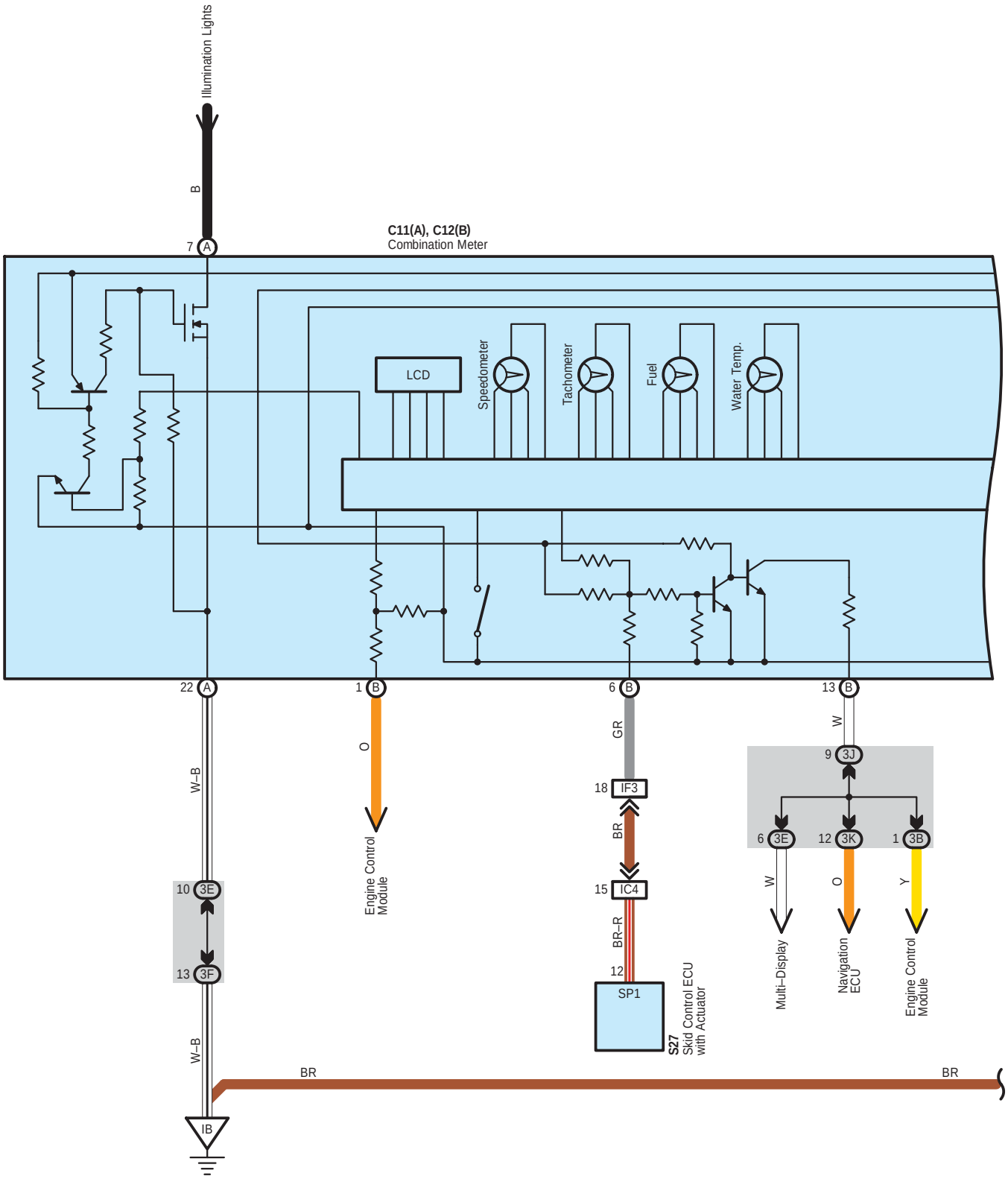
Illumination Lights
B
7 A
C11(A), C12(B)
Combination Meter
LCD
Speedometer
Tachometer
Fuel
Water Temp.
22 A
W–B
10 3E
13 3F
W–B
IB
1 B
O
Engine Control Module
6 B
GR
18 IF3
BR
15 IC4
BR–R
12
SP1
S27
Skid Control ECU with Actuator
13 B
W
9 3J
6 3E
12 3K
1 3B
W
O
Y
Multi–Display
Navigation ECU
Engine Control Module
BR
BR

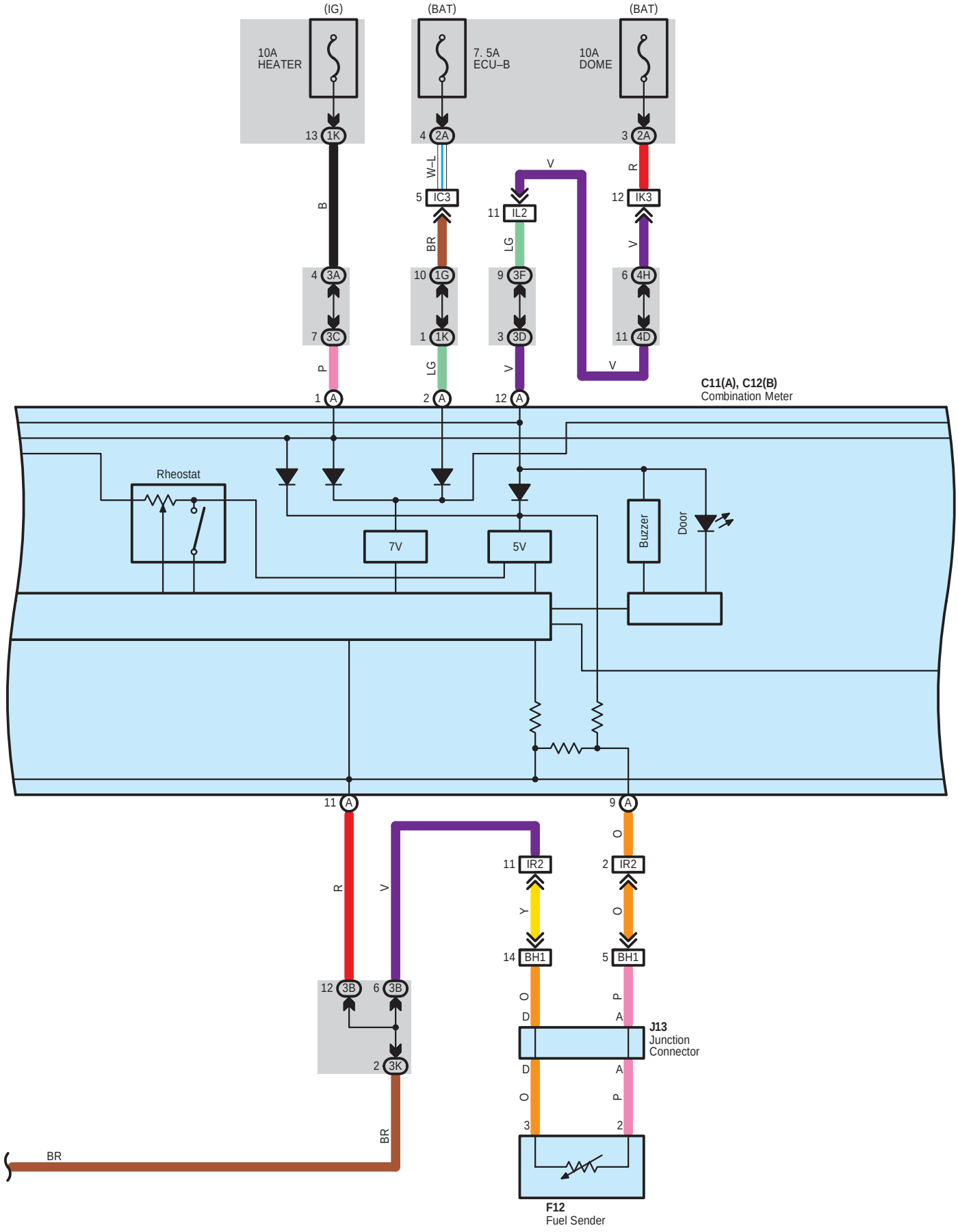
(IG)
(BAT)
(BAT)
10A
HEATER
7. 5A
ECU–B
10A
DOME
13 1K
4 2A
3 2A
W–L
R
B
5 IC3
12 IK3
V
11 IL2
LG
BR
V
4 3A
10 1G
9 3F
6 4H
7 3C
1 1K
3 3D
11 4D
P
LG
V
V
1 A
2 A
12 A
C11(A), C12(B)
Combination Meter
Rheostat
7V
5V
Buzzer
Door
11 A
9 A
R
V
O
11 IR2
2 IR2
Y
O
14 BH1
5 BH1
O
P
D
A
J13
Junction
Connector
12 3B
6 3B
2 3K
D
A
O
P
3
2
BR
BR
F12
Fuel Sender

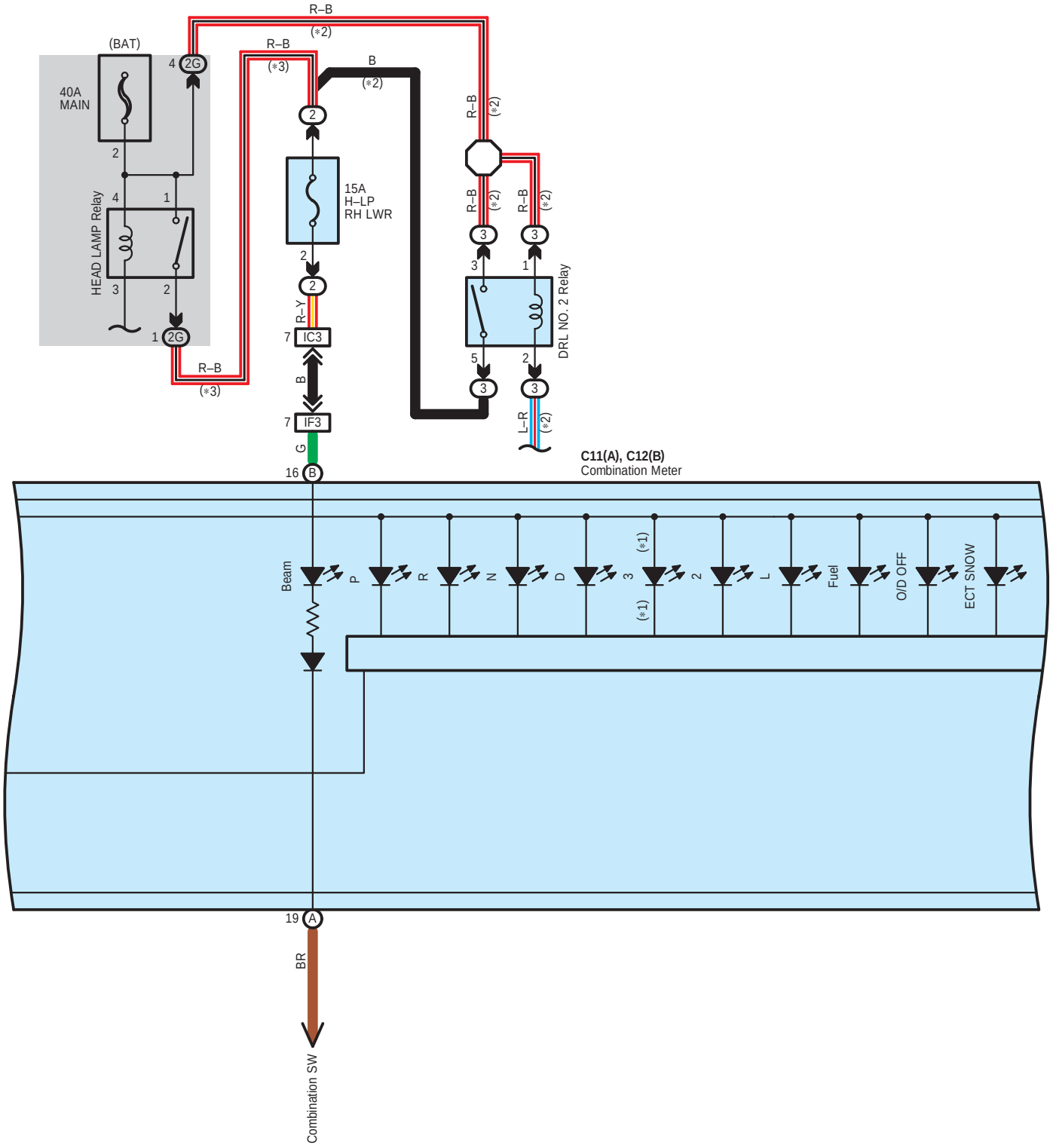
(BAT)
40A
MAIN
HEAD LAMP Relay
15A
H–LP
RH LWR
DRL NO. 2 Relay
R–B
(*2)
(*3)
B
R–Y
G
L–R
IC3
IF3
C11(A), C12(B)
Combination Meter
Beam
P
R
N
D
3
2
L
Fuel
O/D OFF
ECT SNOW
(*1)
BR
Combination SW

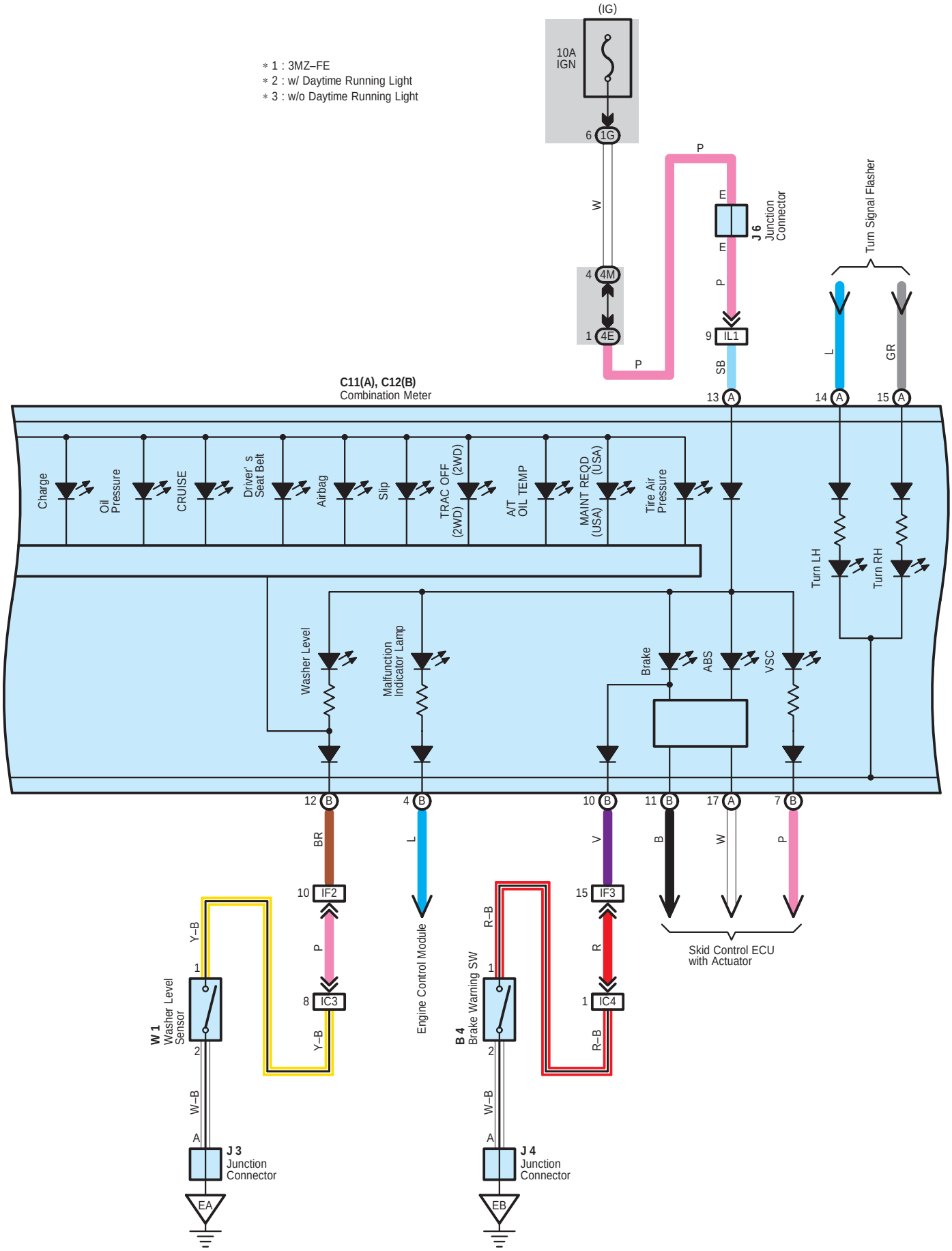
* 1 : 3MZ–FE
* 2 : w/ Daytime Running Light
* 3 : w/o Daytime Running Light
(IG)
10A IGN
6 1G
W
4 4M
1 4E
P
E
J 6 Junction Connector
E
P
9 IL1
SB
13 A
Turn Signal Flasher
L
GR
14 A
15 A
C11(A), C12(B)
Combination Meter
Charge
Oil Pressure
CRUISE
Driver's Seat Belt
Airbag
Slip
TRAC OFF (2WD)
(2WD)
A/T OIL TEMP
MAINT REQD (USA)
(USA)
Tire Air Pressure
Turn LH
Turn RH
Washer Level
Malfunction Indicator Lamp
Brake
ABS
VSC
12 B
4 B
10 B
11 B
17 A
7 B
BR
L
V
B
W
P
10 IF2
15 IF3
P
R
8 IC3
1 IC4
Y–B
R–B
Y–B
R–B
Engine Control Module
Skid Control ECU with Actuator
W 1 Washer Level Sensor
B 4 Brake Warning SW
1
2
W–B
A
J 3 Junction Connector
J 4 Junction Connector
EA
EB

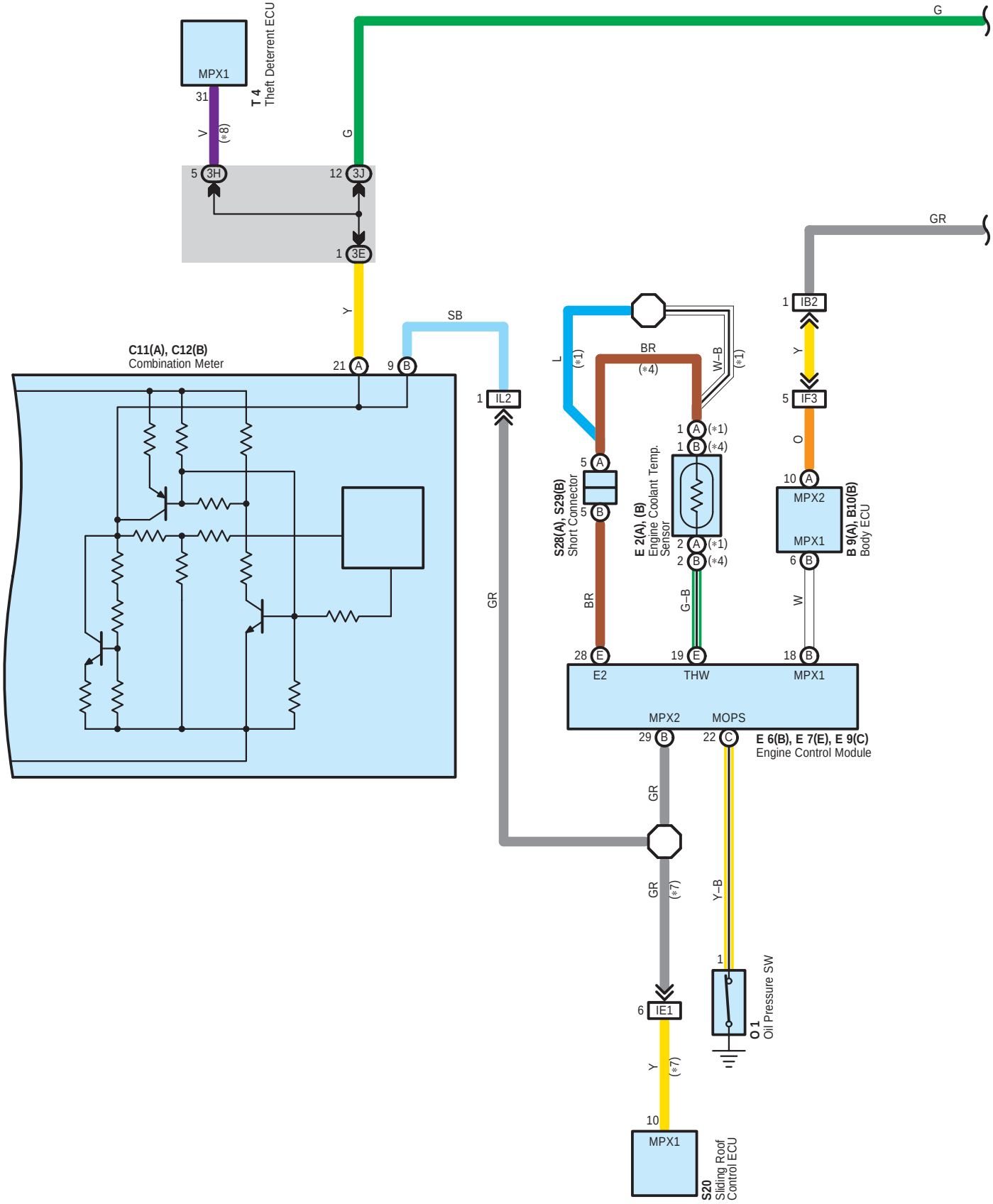
MPX1
31
T 4
Theft Deterrent ECU
V
(*8)
G
5 3H
12 3J
1 3E
G
GR
Y
SB
C11(A), C12(B)
Combination Meter
21 A
9 B
1 IL2
L
(*1)
BR
(*4)
W–B
(*1)
1 IB2
Y
5 IF3
O
10 A
MPX2
MPX1
B 9(A), B10(B)
Body ECU
6 B
W
1 A (*1)
1 B (*4)
5 A
5 B
S28(A), S29(B)
Short Connector
E 2(A), (B)
Engine Coolant Temp.
Sensor
2 A (*1)
2 B (*4)
BR
G–B
GR
28 E
19 E
18 B
E2
THW
MPX1
MPX2
MOPS
29 B
22 C
E 6(B), E 7(E), E 9(C)
Engine Control Module
GR
GR
(*7)
Y–B
6 IE1
1
O 1
Oil Pressure SW
Y
(*7)
10
MPX1
S20
Sliding Roof
Control ECU

∗ 1 : 3MZ–FE
∗ 4 : 2AZ–FE
∗ 5 : w/ Navigation System
∗ 6 : w/o Navigation System
∗ 7 : w/ Moon Roof
∗ 8 : w/ Theft Deterrent System

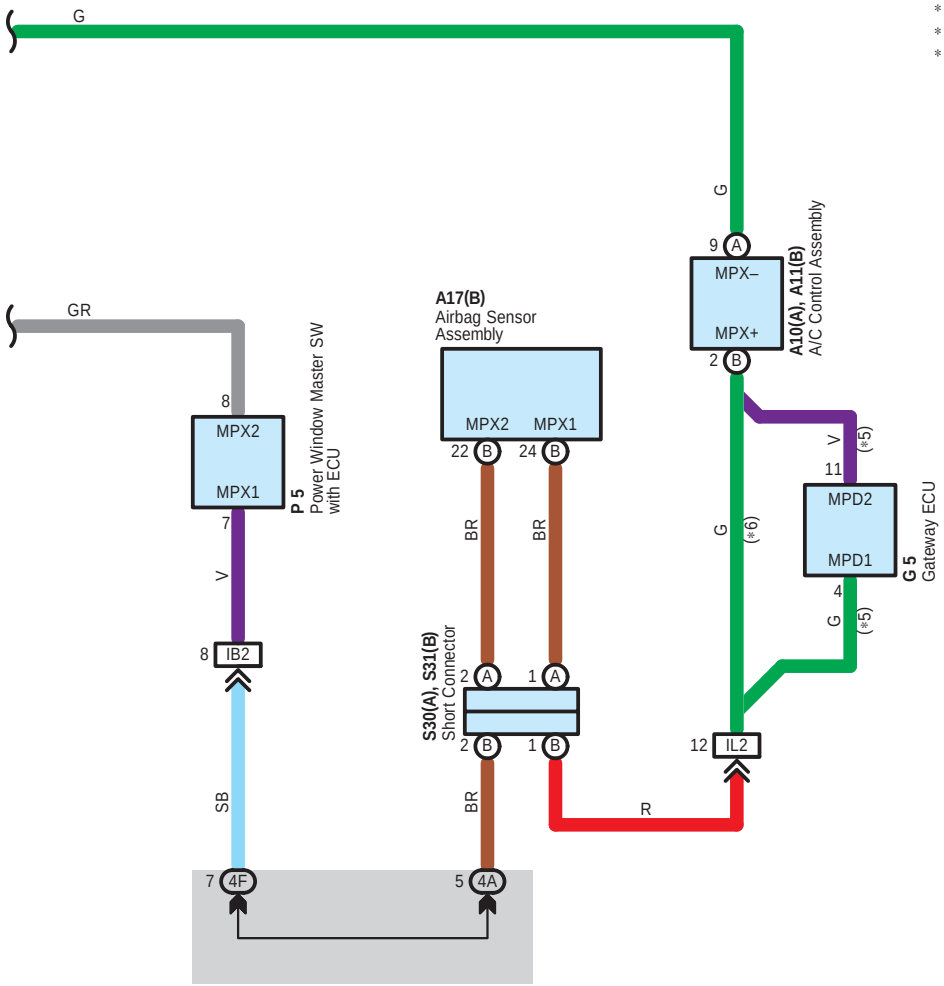

: Parts Location

Code		See Page	Code		See Page	Code		See Page
A10	A	42	E7	E	42	P5		44
A11	B	42	E9	C	42	S20		45
A17	B	42	F12		44	S27		39 (3MZ–FE)
B4		38 (3MZ–FE)	G5		43			41 (2AZ–FE)
		40 (2AZ–FE)	J3		39 (3MZ–FE)	S28	A	43
B9	A	42			41 (2AZ–FE)	S29	B	43
B10	B	42	J4		39 (3MZ–FE)	S30	A	43
C11	A	42			41 (2AZ–FE)	S31	B	43
C12	B	42	J6		43	T4		43
E2	A	38 (3MZ–FE)	J13		44	W1		39 (3MZ–FE)
	B	40 (2AZ–FE)	O1		39 (3MZ–FE)			41 (2AZ–FE)
E6	B	42			41 (2AZ–FE)			

: Relay Blocks

Code	See Page	Relay Blocks (Relay Block Location)
2	22	Engine Room R/B (Engine Compartment Left)
3	23	Engine Room R/B No.3 (Engine Compartment Rear Left)

: Junction Block and Wire Harness Connector

Code	See Page	Junction Block and Wire Harness (Connector Location)
1G	29	Cowl Wire and Instrument Panel J/B (Lower Finish Panel)
1K	28	Instrument Panel Wire and Instrument Panel J/B (Lower Finish Panel)
2A	27	Engine Room Main Wire and Engine Room J/B (Engine Compartment Left)
2G		
3A	30	Instrument Panel Wire and Center J/B (Behind the Instrument Panel Center)
3B		
3C		
3D		
3E		
3F		
3H	31	
3J		
3K		
4A	33	Cowl Wire and Passenger Side J/B (Right Side of Grove Box)
4D		
4E		
4F		
4H		
4M	32	

: Connector Joining Wire Harness and Wire Harness

Code	See Page	Joining Wire Harness and Wire Harness (Connector Location)
IB2	50	Front Door LH Wire and Cowl Wire (Left Kick Panel)
IC3	50	Engine Room Main Wire and Cowl Wire (Left Cowl Side Panel)
IC4		
IE1	50	Roof Wire and Cowl Wire (Near the Bottom of Left Front Pillar)
IF2	50	Instrument Panel Wire and Cowl Wire (Right Side of Instrument Panel J/B)
IF3		
IK3	51	Engine Room Main Wire and Cowl Wire (Right Cowl Side Panel)
IL1	51	Instrument Panel Wire and Cowl Wire (Upper Side of Passenger Side J/B)
IL2		
IR2	51	Instrument Panel Wire and Floor Wire (Under the Shift Lever)
BH1	52	Floor No.2 Wire and Floor Wire (Near the Rear Side Marker Light RH)

: Ground Points

Code	See Page	Ground Points Location
EA	48 (3MZ–FE)	Right Front Fender Apron
	49 (2AZ–FE)	
EB	48 (3MZ–FE)	
	49 (2AZ–FE)	
IB	50	Right Instrument Panel Brace

Radiator Fan and Condenser Fan for 3MZ–FE

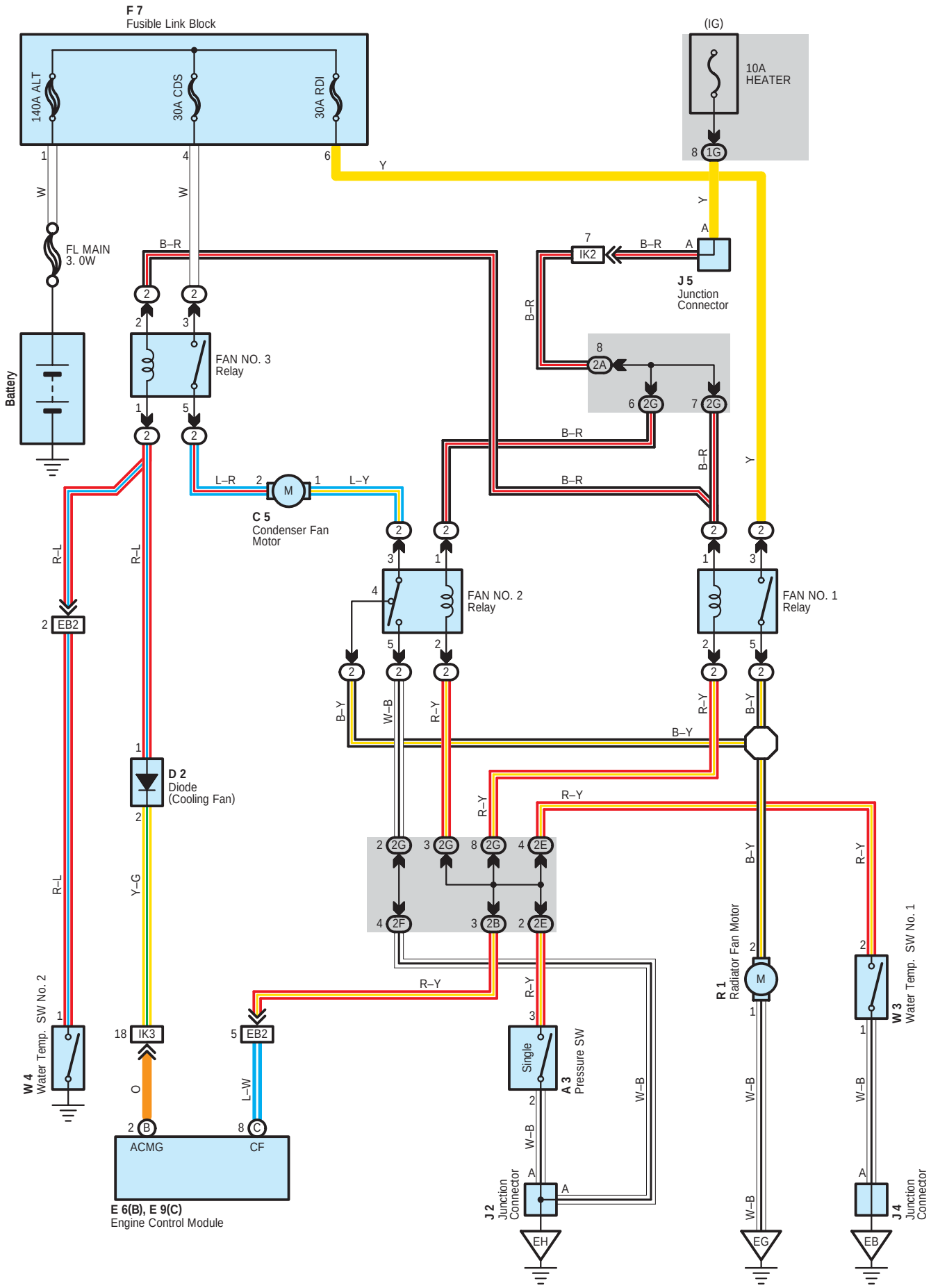

System Outline

The radiator fan motor and condenser fan motor operates according to the water temp. SW NO.1, water temp. SW NO.2, A/C single pressure SW, and the A/C system condition. The FAN NO.1 relay, FAN NO.2 relay, FAN NO.3 relay are turned on/off, to operate the fan motors at low speed (In series), or high speed (In parallel).

Low Speed Operation

When the A/C system is operated, or the water temp. SW no.2 is turned on, the condenser fan motor and radiator fan motor rotate at low speed.

High Speed Operation

When the A/C single pressure SW is turned on, or the water temp. SW no.1 is turned on, the condenser fan motor and radiator fan motor rotate at high speed.

: Parts Location

Code	See Page	Code	See Page	Code	See Page
A3	38 (3MZ–FE)	E9 C	42	J5	43
C5	38 (3MZ–FE)	F7	38 (3MZ–FE)	R1	39 (3MZ–FE)
D2	42	J2	39 (3MZ–FE)	W3	39 (3MZ–FE)
E6 B	42	J4	39 (3MZ–FE)	W4	39 (3MZ–FE)

: Relay Blocks

Code	See Page	Relay Blocks (Relay Block Location)
2	22	Engine Room R/B (Engine Compartment Left)

: Junction Block and Wire Harness Connector

Code	See Page	Junction Block and Wire Harness (Connector Location)
1G	29	Cowl Wire and Instrument Panel J/B (Lower Finish Panel)
2A	27	Engine Room Main Wire and Engine Room J/B (Engine Compartment Left)
2B		
2E		
2F		
2G		

: Connector Joining Wire Harness and Wire Harness

Code	See Page	Joining Wire Harness and Wire Harness (Connector Location)
EB2	48 (3MZ–FE)	Engine Wire and Engine Room Main Wire (Front Side of Engine Room R/B)
IK2	51	Engine Room Main Wire and Cowl Wire (Right Cowl Side Panel)
IK3		

: Ground Points

Code	See Page	Ground Points Location
EB	48 (3MZ–FE)	Right Front Fender Apron
EG	48 (3MZ–FE)	Under the Left Headlight
EH		

Radiator Fan and Condenser Fan for 2AZ–FE

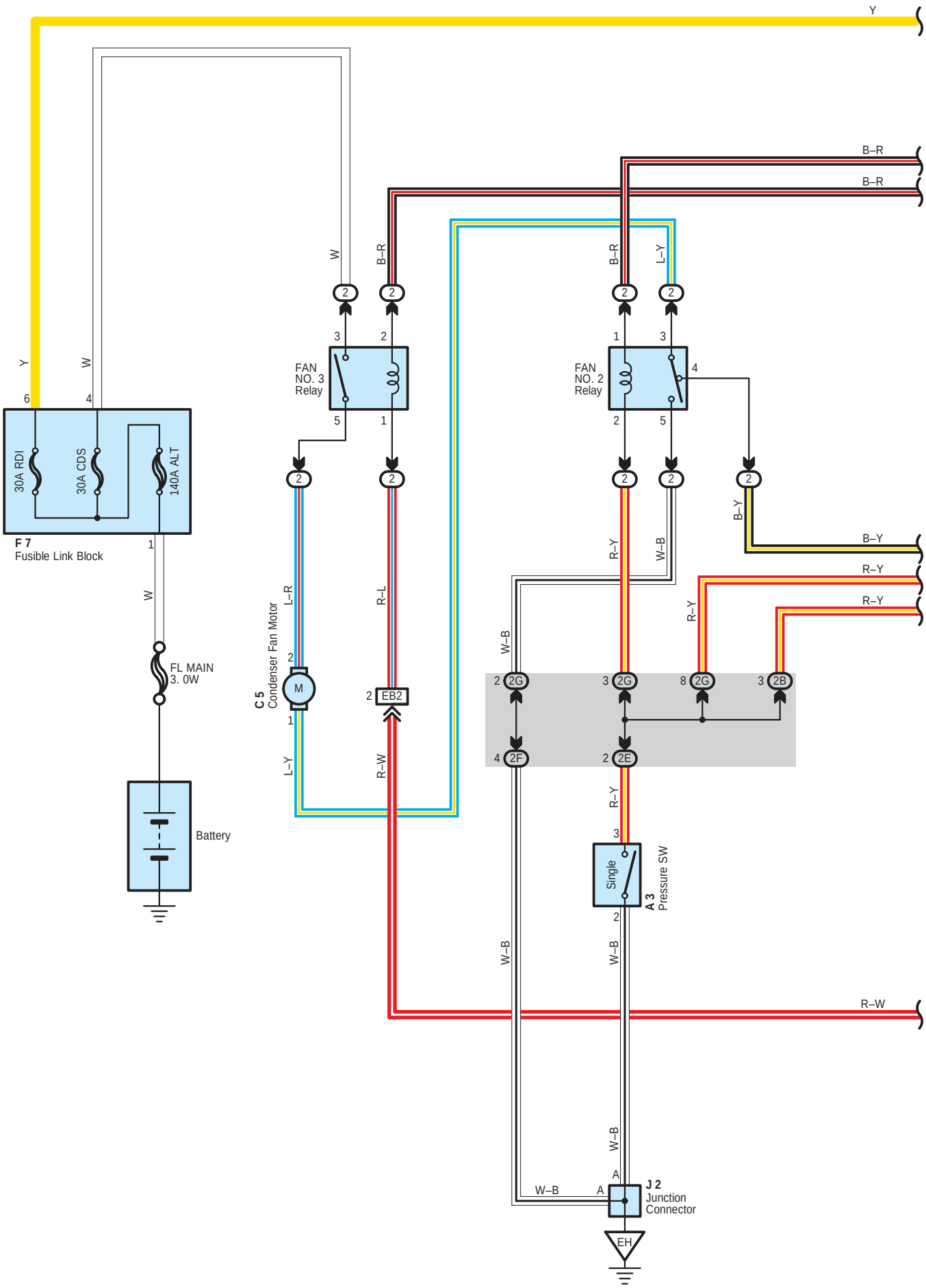

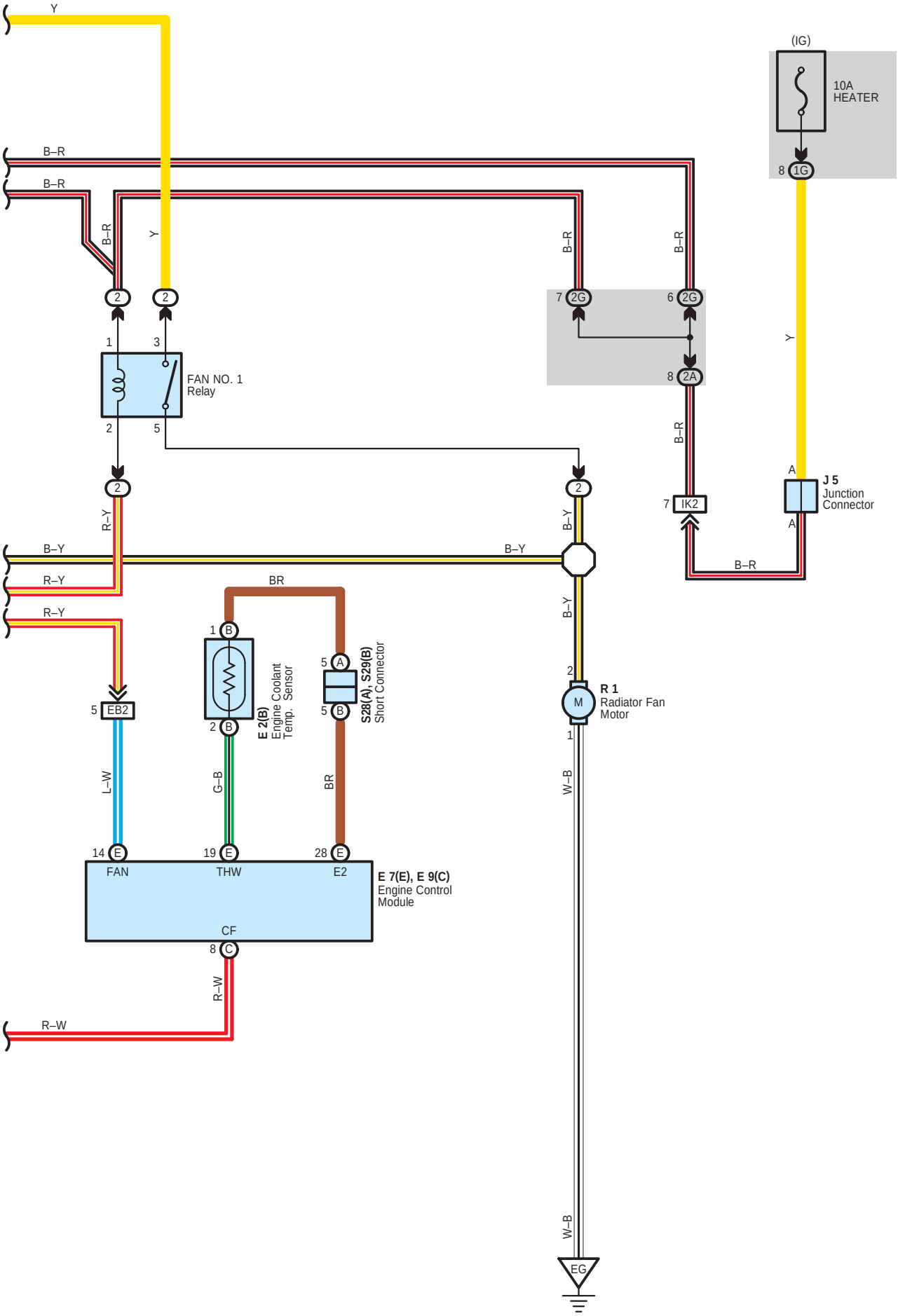
Y
(IG)
10A
HEATER
8 1G
B–R
B–R
B–R
Y
B–R
B–R
2
2
7 2G
6 2G
1
3
FAN NO. 1
Relay
2
5
8 2A
Y
B–R
A
J 5
Junction
Connector
7 IK2
A
B–R
2
2
2
R–Y
B–Y
B–Y
B–Y
R–Y
R–Y
BR
1 B
5 A
5 B
2 B
E 2(B)
Engine Coolant
Temp. Sensor
S28(A), S29(B)
Short Connector
2
R 1
Radiator Fan
Motor
M
1
5 EB2
L–W
G–B
BR
W–B
14 E
19 E
28 E
FAN
THW
E2
E 7(E), E 9(C)
Engine Control
Module
CF
8 C
R–W
W–B
R–W
EG

Radiator Fan and Condenser Fan for 2AZ–FE

System Outline

The radiator fan motor and condenser fan motor operates according to the engine coolant temp. SW, A/C single pressure SW, the engine system condition, and the A/C system condition. The FAN NO.1 relay, FAN NO.2 relay, FAN NO.3 relay are turned on/off, to operate the fan motors at low speed (In series), or high speed (In parallel).

1. Low Speed Operation

Either when the A/C system is operating, the radiator fan motor and A/C condenser fan motor operates at low speed.

2. High Speed Operation

When either the engine coolant temp. SW or A/C single pressure SW is, or both of them are turned on, the radiator fan motor and A/C condenser fan motor operate at high speed.

: Parts Location

Code	See Page	Code	See Page	Code	See Page
A3	40 (2AZ–FE)	E9 C	42	R1	41 (2AZ–FE)
C5	40 (2AZ–FE)	F7	40 (2AZ–FE)	S28 A	43
E2 B	40 (2AZ–FE)	J2	41 (2AZ–FE)	S29 B	43
E7 E	42	J5	43		

: Relay Blocks

Code	See Page	Relay Blocks (Relay Block Location)
2	22	Engine Room R/B (Engine Compartment Left)

: Junction Block and Wire Harness Connector

Code	See Page	Junction Block and Wire Harness (Connector Location)
1G	29	Cowl Wire and Instrument Panel J/B (Lower Finish Panel)
2A	27	Engine Room Main Wire and Engine Room J/B (Engine Compartment Left)
2B		
2E		
2F		
2G		

: Connector Joining Wire Harness and Wire Harness

Code	See Page	Joining Wire Harness and Wire Harness (Connector Location)
EB2	49 (2AZ–FE)	Engine Wire and Engine Room Main Wire (Front Side of Engine Room R/B)
IK2	51	Engine Room Main Wire and Cowl Wire (Right Cowl Side Panel)

: Ground Points

Code	See Page	Ground Points Location
EG	49 (2AZ–FE)	Under the Left Headlight
EH		

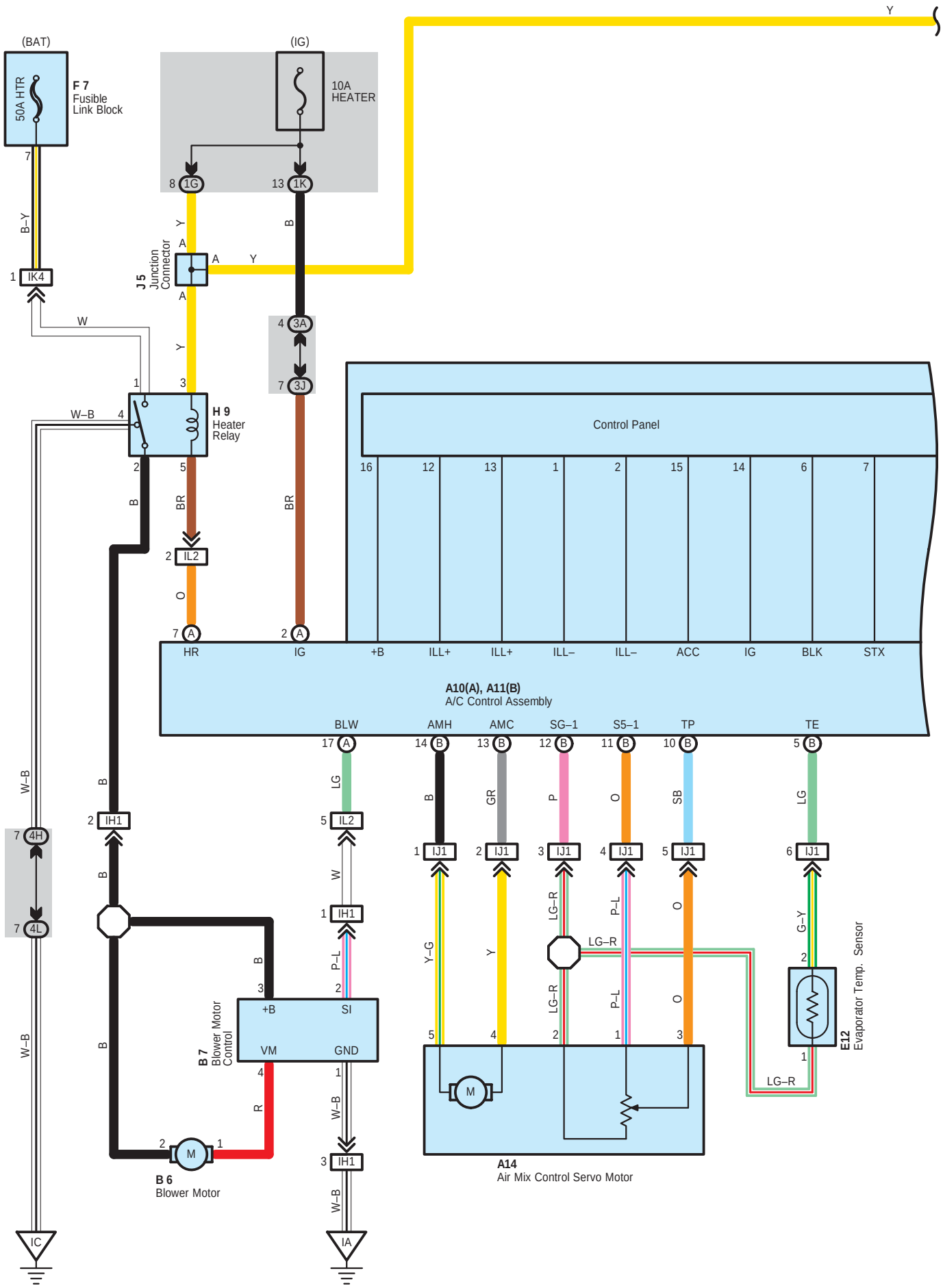
(BAT)
(IG)
50A HTR
F 7
Fusible
Link Block
10A
HEATER
J 5
Junction
Connector
H 9
Heater
Relay
Control Panel
A10(A), A11(B)
A/C Control Assembly
HR
IG
+B
ILL+
ILL+
ILL–
ILL–
ACC
IG
BLK
STX
BLW
AMH
AMC
SG–1
S5–1
TP
TE
B 7
Blower Motor
Control
+B
SI
VM
GND
B 6
Blower Motor
A14
Air Mix Control Servo Motor
E12
Evaporator Temp. Sensor
LG–R
IC
IA

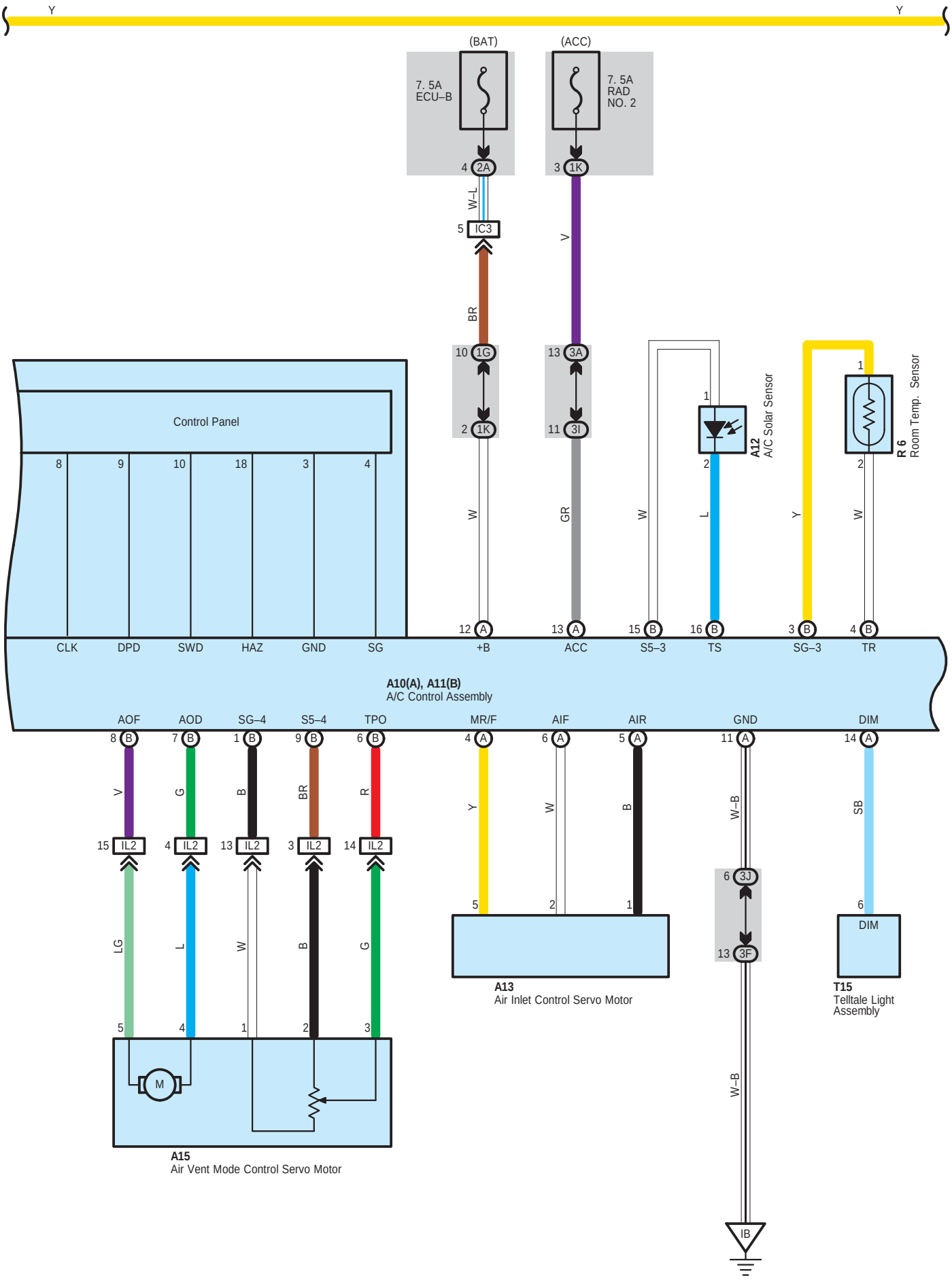
Y
Y
(BAT)
(ACC)
7. 5A
ECU–B
7. 5A
RAD
NO. 2
4 2A
3 1K
W–L
5 IC3
V
BR
10 1G
2 1K
13 3A
11 3I
Control Panel
8
9
10
18
3
4
CLK
DPD
SWD
HAZ
GND
SG
W
GR
W
L
Y
W
1
2
A12
A/C Solar Sensor
R 6
Room Temp. Sensor
12 A
13 A
15 B
16 B
3 B
4 B
+B
ACC
S5–3
TS
SG–3
TR
A10(A), A11(B)
A/C Control Assembly
AOF
AOD
SG–4
S5–4
TPO
MR/F
AIF
AIR
GND
DIM
8 B
7 B
1 B
9 B
6 B
4 A
6 A
5 A
11 A
14 A
V
G
B
BR
R
Y
W
B
W–B
SB
15 IL2
4 IL2
13 IL2
3 IL2
14 IL2
LG
L
W
B
G
5
4
1
2
3
M
A15
Air Vent Mode Control Servo Motor
A13
Air Inlet Control Servo Motor
6 3J
13 3F
W–B
IB
DIM
T15
Telltale Light
Assembly

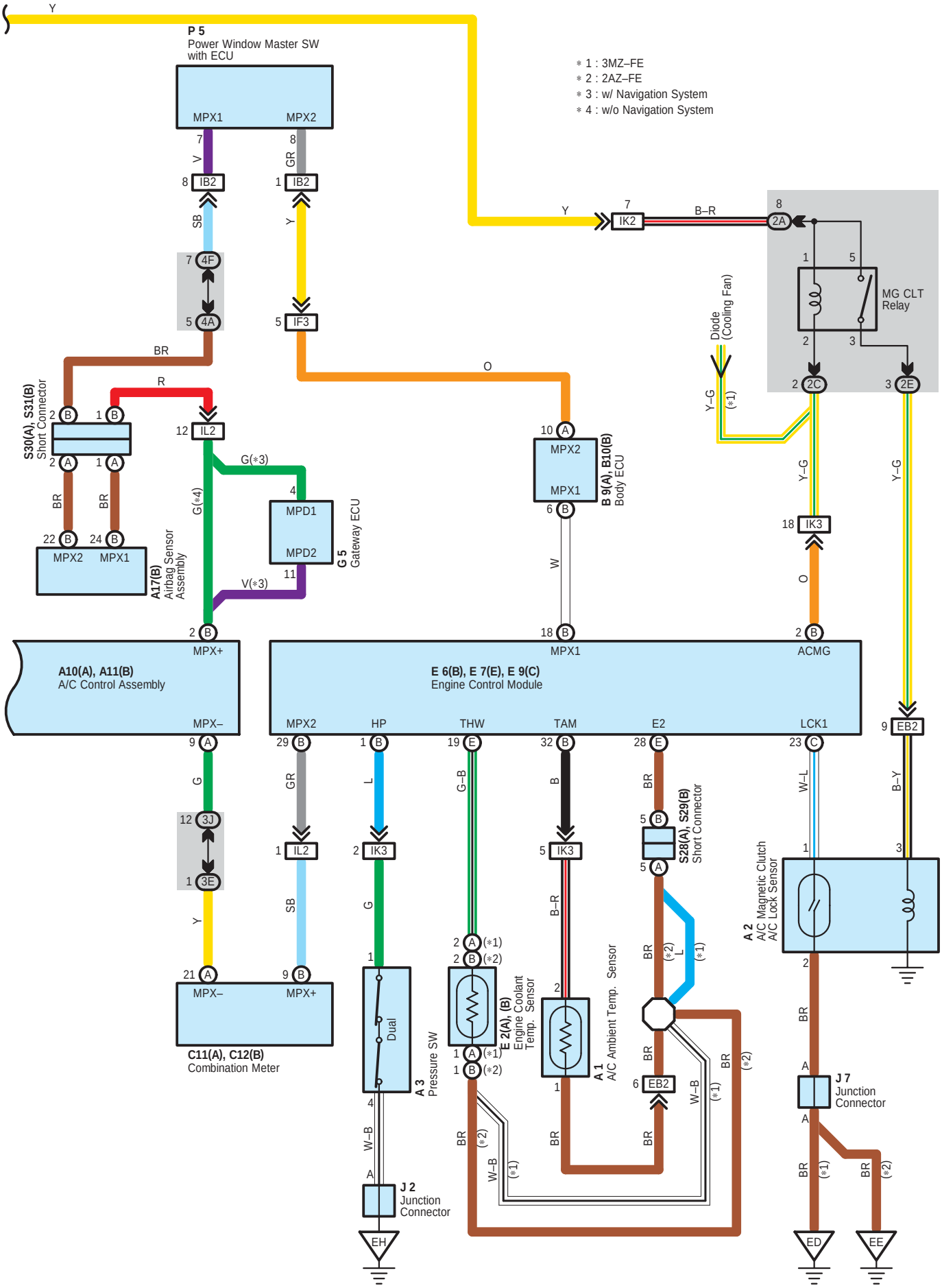
P 5
Power Window Master SW with ECU
MPX1
MPX2
＊1 : 3MZ–FE
＊2 : 2AZ–FE
＊3 : w/ Navigation System
＊4 : w/o Navigation System
IB2
IK2
2A
MG CLT Relay
Diode (Cooling Fan)
4F
4A
IF3
2C
2E
S30(A), S31(B) Short Connector
IL2
B 9(A), B10(B) Body ECU
IK3
MPD1
MPD2
G 5 Gateway ECU
A17(B) Airbag Sensor Assembly
MPX+
MPX–
ACMG
A10(A), A11(B) A/C Control Assembly
E 6(B), E 7(E), E 9(C) Engine Control Module
HP
THW
TAM
E2
LCK1
EB2
3J
3E
C11(A), C12(B) Combination Meter
A 3 Pressure SW
Dual
E 2(A), (B) Engine Coolant Temp. Sensor
A 1 A/C Ambient Temp. Sensor
S28(A), S29(B) Short Connector
A 2 A/C Magnetic Clutch A/C Lock Sensor
J 2 Junction Connector
J 7 Junction Connector
EH
ED
EE

: Parts Location

Code	See Page	Code	See Page	Code	See Page
A1	38 (3MZ–FE)	B7	42	F7	40 (2AZ–FE)
	40 (2AZ–FE)	B9 A	42	G5	43
A2	38 (3MZ–FE)	B10 B	42	H9	43
	40 (2AZ–FE)	C11 A	42	J2	39 (3MZ–FE)
A3	38 (3MZ–FE)	C12 B	42		41 (2AZ–FE)
	40 (2AZ–FE)	E2 A	38 (3MZ–FE)	J5	43
A10 A	42		40 (2AZ–FE)	J7	43
A11 B	42	E2 B	38 (3MZ–FE)	P5	44
A12	42		40 (2AZ–FE)	R6	43
A13	42	E6 B	42	S28 A	43
A14	42	E7 E	42	S29 B	43
A15	42	E9 C	42	S30 A	43
A17 B	42	E12	42	S31 B	43
B6	42	F7	38 (3MZ–FE)	T15	43

: Junction Block and Wire Harness Connector

Code	See Page	Junction Block and Wire Harness (Connector Location)
1G	29	Cowl Wire and Instrument Panel J/B (Lower Finish Panel)
1K	28	Instrument Panel Wire and Instrument Panel J/B (Lower Finish Panel)
2A	27	Engine Room Main Wire and Engine Room J/B (Engine Compartment Left)
2C		
2E		
3A	30	Instrument Panel Wire and Center J/B (Behind the Instrument Panel Center)
3E		
3F		
3I	31	
3J		
4A	33	Cowl Wire and Passenger Side J/B (Right Side of Grove Box)
4F		
4H		
4L	32	

: Connector Joining Wire Harness and Wire Harness

Code	See Page	Joining Wire Harness and Wire Harness (Connector Location)
EB2	48 (3MZ–FE)	Engine Wire and Engine Room Main Wire (Front Side of Engine Room R/B)
	49 (2AZ–FE)	
IB2	50	Front Door LH Wire and Cowl Wire (Left Kick Panel)
IC3	50	Engine Room Main Wire and Cowl Wire (Left Cowl Side Panel)
IF3	50	Instrument Panel Wire and Cowl Wire (Right Side of Instrument Panel J/B)
IH1	51	Cowl Wire and A/C Sub No.2 Wire (Upper Portion of Right Instrument Panel Brace)
IJ1	51	Instrument Panel Wire and A/C Sub No.3 Wire (Upper Portion of Right Instrument Panel Brace)
IK2	51	Engine Room Main Wire and Cowl Wire (Right Cowl Side Panel)
IK3		
IK4		
IL2	51	Instrument Panel Wire and Cowl Wire (Upper Side of Passenger Side J/B)

▽ : **Ground Points**

Code	See Page	Ground Points Location
ED	48 (3MZ–FE)	Rear Side of Cylinder Head
EE	49 (2AZ–FE)	Intake Side of Cylinder Block
EH	48 (3MZ–FE)	Under the Left Headlight
	49 (2AZ–FE)	
IA	50	Left Cowl Side Panel
IB	50	Right Instrument Panel Brace
IC	50	Right Cowl Side Panel

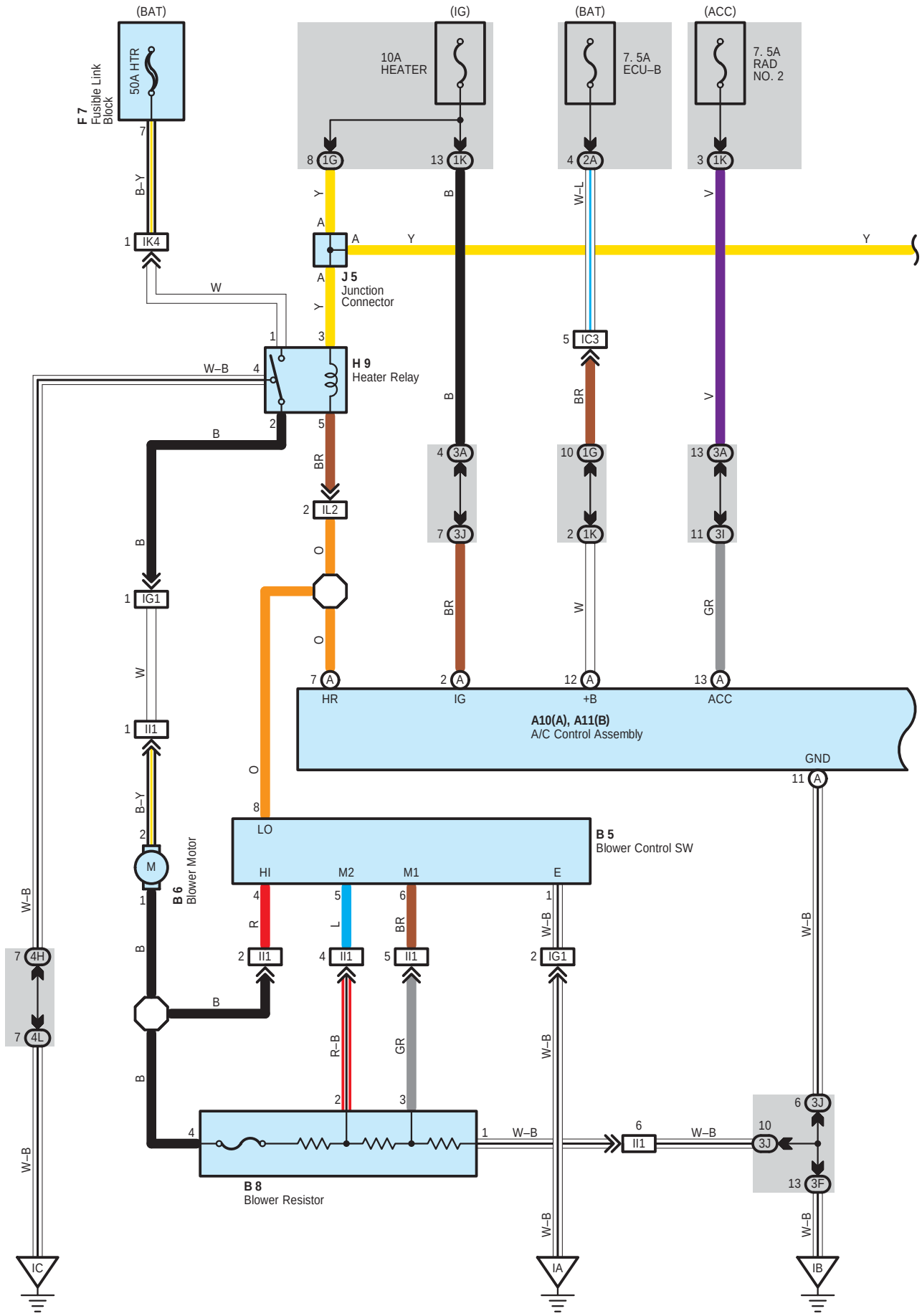
(BAT)
(IG)
(BAT)
(ACC)
F 7
Fusible Link Block
50A HTR
10A HEATER
7. 5A ECU–B
7. 5A RAD NO. 2
IK4
1G
1K
2A
1K
J 5
Junction Connector
IC3
H 9
Heater Relay
3A
3J
1G
2
1K
3A
3I
IL2
IG1
II1
A10(A), A11(B)
A/C Control Assembly
HR
IG
+B
ACC
GND
B 6
Blower Motor
B 5
Blower Control SW
LO
HI
M2
M1
E
4H
4L
B 8
Blower Resistor
IC
IA
IB
3F

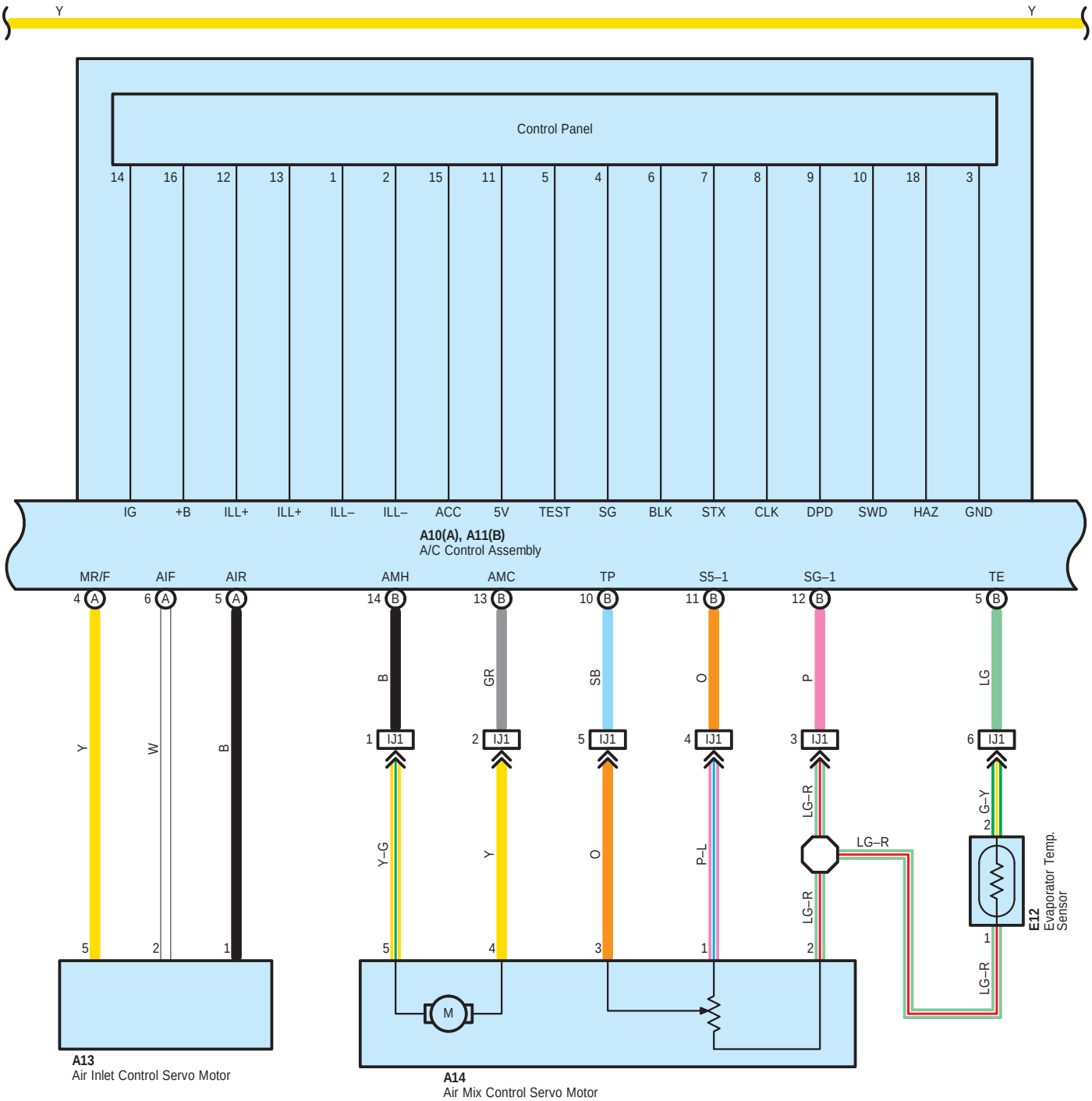
Y
Y
Control Panel
14 16 12 13 1 2 15 11 5 4 6 7 8 9 10 18 3
IG +B ILL+ ILL+ ILL– ILL– ACC 5V TEST SG BLK STX CLK DPD SWD HAZ GND
A10(A), A11(B)
A/C Control Assembly
MR/F AIF AIR AMH AMC TP S5–1 SG–1 TE
4 6 5 14 13 10 11 12 5
Y W B B GR SB O P LG
1 2 3 4 5 6
IJ1
Y–G Y O P–L LG–R LG–R G–Y
5 4 3 1 2 1 2
LG–R
M
E12
Evaporator Temp. Sensor
A13
Air Inlet Control Servo Motor
A14
Air Mix Control Servo Motor

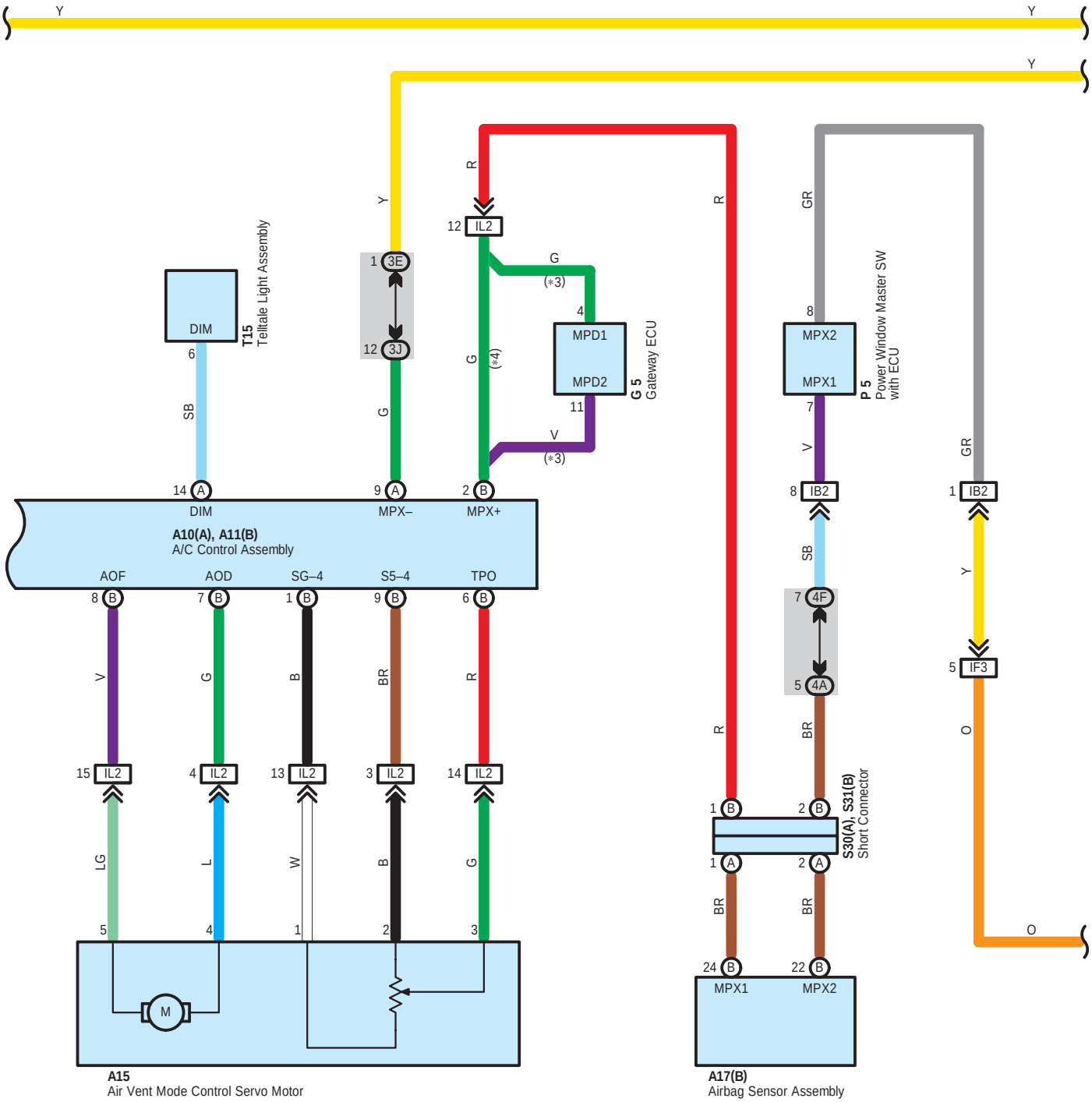
Y
Y
Y
R
12 IL2
G
(*3)
4
MPD1
MPD2
11
V
(*3)
G 5
Gateway ECU
G
(*4)
Y
1 3E
12 3J
G
R
GR
8
MPX2
MPX1
7
V
8 IB2
P 5
Power Window Master SW
with ECU
GR
1 IB2
Y
5 IF3
O
O
DIM
6
SB
14 A
DIM
T15
Telltale Light Assembly
9 A
MPX–
2 B
MPX+
A10(A), A11(B)
A/C Control Assembly
AOF
AOD
SG–4
S5–4
TPO
8 B
7 B
1 B
9 B
6 B
V
G
B
BR
R
15 IL2
4 IL2
13 IL2
3 IL2
14 IL2
LG
L
W
B
G
5
4
1
2
3
M
A15
Air Vent Mode Control Servo Motor
SB
7 4F
5 4A
BR
R
1 B
2 B
1 A
2 A
BR
BR
S30(A), S31(B)
Short Connector
24 B
22 B
MPX1
MPX2
A17(B)
Airbag Sensor Assembly

∗ 1 : 3MZ–FE
∗ 2 : 2AZ–FE
∗ 3 : w/ Navigation System
∗ 4 : w/o Navigation System

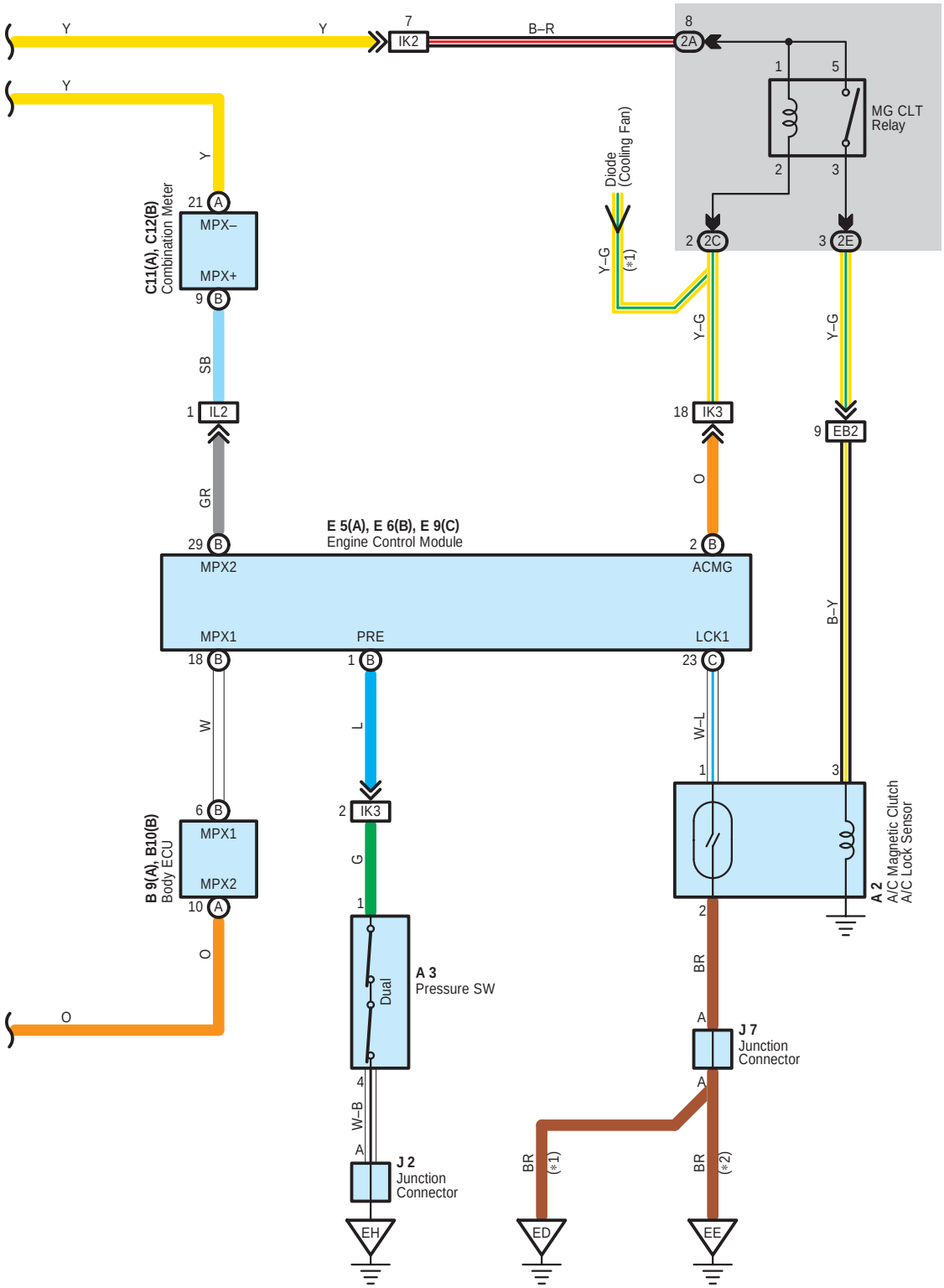

System Outline

1. Heater Blower Motor Operation

Current is applied at all times through the HTR fuse to TERMINAL 1 of the heater relay.
When the ignition SW is turned on, current flows through the HEATER fuse to TERMINAL 3 of the heater relay to TERMINAL 5 to TERMINAL 8 of the blower control SW.

* Low speed operation
  When the blower SW is moved to LO position, the current to TERMINAL 8 of the blower control SW flows to TERMINAL 1 to GROUND, causing the heater relay is turned on. This causes the current to flow from the HTR fuse to TERMINAL 1 of the heater relay to TERMINAL 2 to TERMINAL 2 of the blower motor to TERMINAL 1 to TERMINAL 4 of the blower resistor to TERMINAL 1 to GROUND, causing the blower motor to rotate at low speed.

* Medium speed operation (Operation at M1, M2)
  When the blower SW is moved to M1 position, the current to TERMINAL 8 of the blower control SW flows to TERMINAL 1 to GROUND, turns the heater relay on. This causes the current to flow from the HTR fuse to TERMINAL 1 of the heater relay to TERMINAL 2 to TERMINAL 2 of the blower motor to TERMINAL 1 to TERMINAL 4 of the blower resistor to TERMINAL 3 to TERMINAL 6 of the blower control SW to TERMINAL 1 to GROUND. At this time, the blower resistance of the blower resistor is less than at low speed, so the blower motor rotates at medium low speed.
  When the blower control SW is moved to M2 position, current flowing through the motor flows from TERMINAL 4 of the blower resistor to TERMINAL 2 to TERMINAL 5 of the blower control SW to TERMINAL 1 to GROUND. At this time, resistance of the blower resistor is less than at M1 position, so the blower motor rotates at medium high speed.

* High speed operation
  When the blower SW is moved to HI position, the current flows to TERMINAL 8 of the blower control SW to TERMINAL 1 to GROUND and turns the heater relay on.
  This causes the current to flow from the HTR fuse to TERMINAL 1 of the heater relay to TERMINAL 2 to TERMINAL 2 of the blower motor to TERMINAL 1 to TERMINAL 4 of the blower control SW to TERMINAL 1 to GROUND, causing the blower motor to rotate at high speed.

2. Air Conditioning Operation

If the A/C control SW is turned on when the blower SW is set to on, A/C operation starts. However, when the mode SW is at DEF or FOOT/DEF position, forcibly the air intake is set to FRESH mode and the A/C operates.

○ : Parts Location

Code	See Page	Code	See Page	Code	See Page
A2	38 (3MZ–FE)	B6	42	F7	40 (2AZ–FE)
	40 (2AZ–FE)	B8	42	G5	43
A3	38 (3MZ–FE)	B9 A	42	H9	43
	40 (2AZ–FE)	B10 B	42	J2	39 (3MZ–FE)
A10 A	42	C11 A	42		41 (2AZ–FE)
A11 B	42	C12 B	42	J5	43
A13	42	E5 A	42	J7	43
A14	42	E6 B	42	P5	44
A15	42	E9 C	42	S30 A	43
A17 B	42	E12	42	S31 B	43
B5	42	F7	38 (3MZ–FE)	T15	43

: **Junction Block and Wire Harness Connector**

Code	See Page	Junction Block and Wire Harness (Connector Location)
1G	29	Cowl Wire and Instrument Panel J/B (Lower Finish Panel)
1K	28	Instrument Panel Wire and Instrument Panel J/B (Lower Finish Panel)
2A	27	Engine Room Main Wire and Engine Room J/B (Engine Compartment Left)
2C		
2E		
3A	30	Instrument Panel Wire and Center J/B (Behind the Instrument Panel Center)
3E		
3F		
3I	31	
3J		
4A	33	Cowl Wire and Passenger Side J/B (Right Side of Grove Box)
4F		
4H		
4L	32	

: **Connector Joining Wire Harness and Wire Harness**

Code	See Page	Joining Wire Harness and Wire Harness (Connector Location)
EB2	48 (3MZ–FE)	Engine Wire and Engine Room Main Wire (Front Side of Engine Room R/B)
	49 (2AZ–FE)	
IB2	50	Front Door LH Wire and Cowl Wire (Left Kick Panel)
IC3	50	Engine Room Main Wire and Cowl Wire (Left Cowl Side Panel)
IF3	50	Instrument Panel Wire and Cowl Wire (Right Side of Instrument Panel J/B)
IG1	50	Instrument Panel Wire and Cowl Wire (Upper Portion of Right Instrument Panel Brace)
II1	51	Instrument Panel Wire and A/C Sub No.1 Wire (Upper Portion of Right Instrument Panel Brace)
IJ1	51	Instrument Panel Wire and A/C Sub No.3 Wire (Upper Portion of Right Instrument Panel Brace)
IK2	51	Engine Room Main Wire and Cowl Wire (Right Cowl Side Panel)
IK3		
IK4		
IL2	51	Instrument Panel Wire and Cowl Wire (Upper Side of Passenger Side J/B)

: **Ground Points**

Code	See Page	Ground Points Location
ED	48 (3MZ–FE)	Rear Side of Cylinder Head
EE	49 (2AZ–FE)	Intake Side of Cylinder Block
EH	48 (3MZ–FE)	Under the Left Headlight
	49 (2AZ–FE)	
IA	50	Left Cowl Side Panel
IB	50	Right Instrument Panel Brace
IC	50	Right Cowl Side Panel

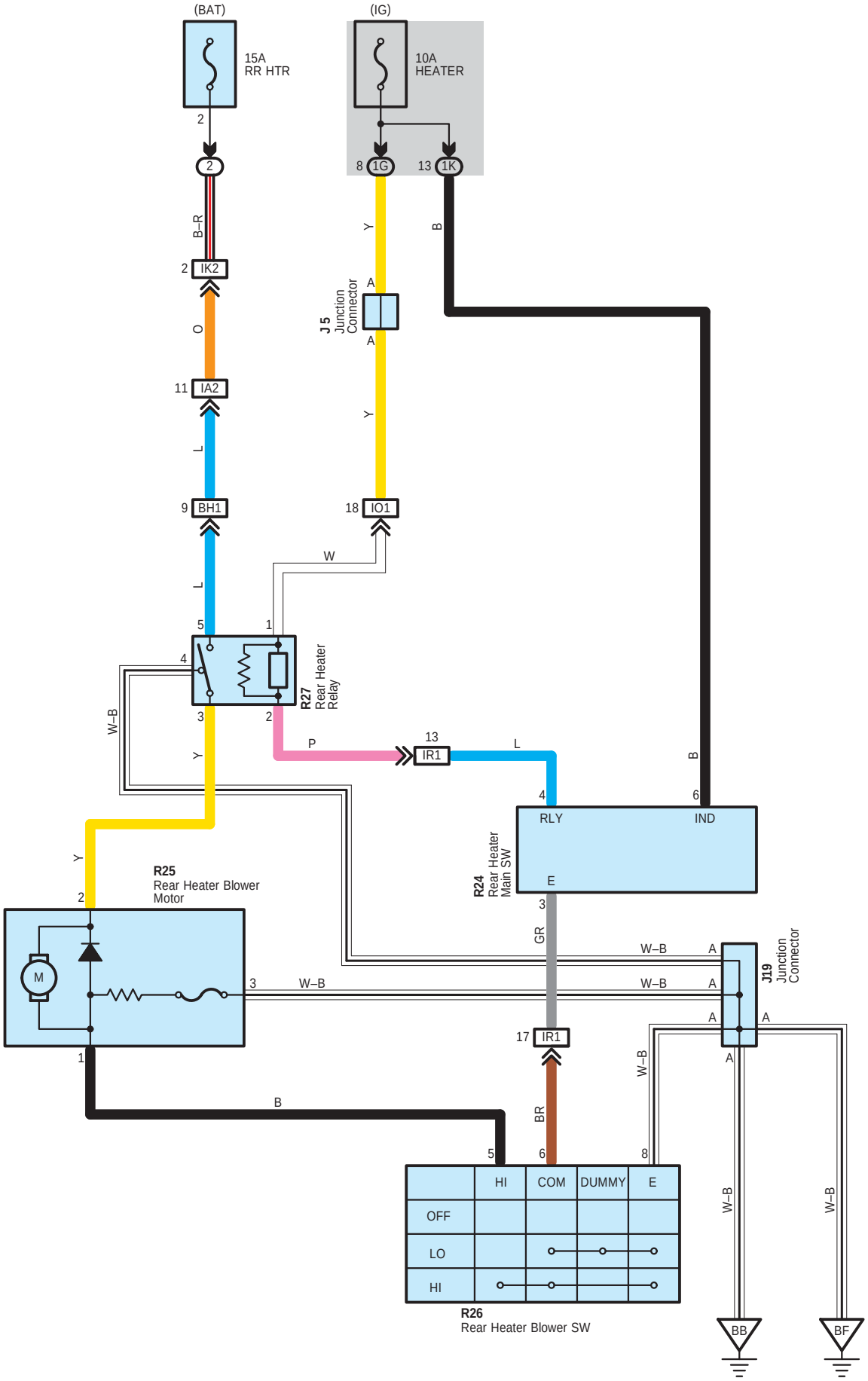
(BAT)
(IG)
15A
RR HTR
10A
HEATER
2
8 1G
13 1K
B–R
Y
B
2 IK2
J5
Junction
Connector
A
O
11 IA2
L
9 BH1
18 IO1
W
5
1
4
R27
Rear Heater
Relay
3
2
W–B
P
13
IR1
L
B
4
6
RLY
IND
R24
Rear Heater
Main SW
E
Y
R25
Rear Heater Blower
Motor
2
3
GR
W–B
A
J19
Junction
Connector
M
3
W–B
W–B
A
A
A
17 IR1
1
B
W–B
BR
5
6
8
HI
COM
DUMMY
E
OFF
LO
HI
R26
Rear Heater Blower SW
W–B
W–B
BB
BF

: Parts Location

Code	See Page	Code	See Page	Code	See Page
J5	43	R24	43	R26	45
J19	44	R25	45	R27	45

: Relay Blocks

Code	See Page	Relay Blocks (Relay Block Location)
2	22	Engine Room R/B (Engine Compartment Left)

: Junction Block and Wire Harness Connector

Code	See Page	Junction Block and Wire Harness (Connector Location)
1G	29	Cowl Wire and Instrument Panel J/B (Lower Finish Panel)
1K	28	Instrument Panel Wire and Instrument Panel J/B (Lower Finish Panel)

: Connector Joining Wire Harness and Wire Harness

Code	See Page	Joining Wire Harness and Wire Harness (Connector Location)
IA2	50	Cowl Wire and Floor No.2 Wire (Left Kick Panel)
IK2	51	Engine Room Main Wire and Cowl Wire (Right Cowl Side Panel)
IO1	51	Cowl Wire and Floor Wire (Right Kick Panel)
IR1	51	Instrument Panel Wire and Floor Wire (Under the Shift Lever)
BH1	52	Floor No.2 Wire and Floor Wire (Near the Rear Side Marker Light RH)

: Ground Points

Code	See Page	Ground Points Location
BB	52	Right Center Pillar
BF	52	Near the Rear Side Marker Light RH

2006 HIGHLANDER ELECTRICAL WIRING DIAGRAM SYSTEM CIRCUITS

	Page
ABS	170
Air Conditioning (Automatic A/C)	278
Air Conditioning (Manual A/C)	284
Audio System (6 Speaker)	262
Audio System (8 Speaker)	264
Automatic Glare–Resistant EC Mirror	248
Automatic Light Control	140
Back–Up Light	128
Charging	66
Cigarette Lighter	228
Combination Meter	284
Cruise Control (2AZ–FE)	184
Cruise Control (3MZ–FE)	168
Door Lock Control	182
Electronically Controlled Transmission and A/T Indicator (2AZ–FE)	104
Electronically Controlled Transmission and A/T Indicator (3MZ–FE)	98
Engine Control (2AZ–FE)	82
Engine Control (3MZ–FE)	70
Engine Immobiliser System	94
Front Defoer	238
Front Fog Light	120
Front Wiper and Washer	204
Garage Door Opener	232
Headlight (w/ Daytime Running Light)	112
Headlight (w/o Daytime Running Light)	116
Horn	224
Ignition	62
Illumination	136
Interior Light	130
Key Reminder	208
Light Auto Turn Off System	142
Mirror Heater	238
Moon Roof	202
Multiplex Communication System (BEAN Bus)	240
Multiplex Communication System (CAN)	244
Navigation System	248
Power Outlet	228
Power Seat (Driver's Seat)	218
Power Seat (Front Passenger's Seat)	220
Power Source	58
Power Window	176
Radiator Fan and Condenser Fan (2AZ–FE)	274
Radiator Fan and Condenser Fan (3MZ–FE)	272
Rear Heater	280
Rear Window Defogger	234
Rear Wiper and Washer	206
Remote Control Mirror	222